2021

HONDA

SERVICE MANUAL



CMX1100L/LD

A Few Words About Safety

Service Information

The service and repair information contained in this manual is intended for use by qualified, professional technicians. Attempting service or repairs without the proper training, tools, and equipment could cause injury to you or others. It could also damage the vehicle or create an unsafe condition.

This manual describes the proper methods and procedures for performing service, maintenance and repairs. Some procedures require the use of specially designed tools and dedicated equipment. Any person who intends to use a replacement part, service procedure or a tool that is not recommended by Honda, must determine the risks to their personal safety and the safe operation of the vehicle.

If you need to replace a part, use Honda Genuine parts with the correct part number or an equivalent part. We strongly recommend that you do not use replacement parts of inferior quality.

For Your Customer's Safety

Proper service and maintenance are essential to the customer's safety and the reliability of the vehicle. Any error or oversight while servicing a vehicle can result in faulty operation, damage to the vehicle, or injury to others.

⚠WARNING

Improper service or repairs can create an unsafe condition that can cause your customer to be seriously hurt or killed.

Follow the procedures and precautions in this manual and other service materials carefully.

For Your Safety

Because this manual is intended for the professional service technician, we do not provide warnings about many basic shop safety practices (e.g., Hot parts–wear gloves). If you have not received shop safety training or do not feel confident about your knowledge of safe servicing practice, we recommended that you do not attempt to perform the procedures described in this manual.

Some of the most important general service safety precautions are given below. However, we cannot warn you of every conceivable hazard that can arise in performing service and repair procedures. Only you can decide whether or not you should perform a given task.

⚠WARNING

Failure to properly follow instructions and precautions can cause you to be seriously hurt or killed.

Follow the procedures and precautions in this manual carefully.

Important Safety Precautions

Make sure you have a clear understanding of all basic shop safety practices and that you are wearing appropriate clothing and using safety equipment. When performing any service task, be especially careful of the following:

- Read all of the instructions before you begin, and make sure you have the tools, the replacement or repair parts, and the skills required to perform the tasks safely and completely.
- Protect your eyes by using proper safety glasses, goggles or face shields any time you hammer, drill, grind, pry or work around pressurized air or liquids, and springs or other stored-energy components. If there is any doubt, put on eye protection.
- Use other protective wear when necessary, for example gloves or safety shoes. Handling hot or sharp parts can cause severe burns or cuts. Before you grab something that looks like it can hurt you, stop and put on gloves.
- Protect yourself and others whenever you have the vehicle up in the air. Any time you lift the vehicle, either with a hoist or a jack, make sure that it is always securely supported. Use jack stands.

Make sure the engine is off before you begin any servicing procedures, unless the instruction tells you to do otherwise. This will help eliminate several potential hazards:

- Carbon monoxide poisoning from engine exhaust. Be sure there is adequate ventilation whenever you run the engine.
- Burns from hot parts or coolant. Let the engine and exhaust system cool before working in those areas.
- Injury from moving parts. If the instruction tells you to run the engine, be sure your hands, fingers and clothing are out of the way.

Gasoline vapors and hydrogen gases from batteries are explosive. To reduce the possibility of a fire or explosion, be careful when working around gasoline or batteries.

- Use only a nonflammable solvent, not gasoline, to clean parts.
- Never drain or store gasoline in an open container.
- Keep all cigarettes, sparks and flames away from the battery and all fuel-related parts.

How To Use This Manual

This manual describes the service procedures for the CMX1100A/D.

Sections 1 and 3 apply to the whole motorcycle. Section 2 illustrates procedures for removal/installation of components that may be required to perform service described in the following sections.
Section 4 through 21 describe parts of the motorcycle, grouped according to location.

Follow the Maintenance Schedule recommendations to ensure that the motorcycle is in peak operating condition.
Performing the first scheduled maintenance is very important. It compensates for the initial wear that occurs during the break-in period.

Find the section you want on this page, then turn to the table of contents on the first page of the section.

Most sections start with an assembly or system illustration, service information and troubleshooting for the section. The subsequent pages give detailed procedure.

Refer to the troubleshooting in each section according to the malfunction or symptom. In case of an each trouble, refer to PGM-FI section troubleshooting first.

Your safety, and the safety of others, is very important. To help you make informed decisions we have provided safety messages and other information throughout this manual. Of course, it is not practical or possible to warn you about all the hazards associated with servicing this vehicle.
You must use your own good judgment.
You will find important safety information in a variety of forms including:

- Safety Labels – on the vehicle
- Safety Messages – preceded by a safety alert symbol ⚠ and one of three signal words, DANGER, WARNING, or CAUTION. These signal words mean:

⚠DANGER You WILL be KILLED or SERIOUSLY HURT if you don't follow instructions.

⚠WARNING You CAN be KILLED or SERIOUSLY HURT if you don't follow instructions.

⚠CAUTION You CAN be HURT if you don't follow instructions.

- Instructions – how to service this vehicle correctly and safely.

NOTICE As you read this manual, you will find information that is preceded by a symbol. The purpose of this message is to help prevent damage to your vehicle, other property, or the environment.

ALL INFORMATION, ILLUSTRATIONS, DIRECTIONS AND SPECIFICATIONS INCLUDED IN THIS PUBLICATION ARE BASED ON THE LATEST PRODUCT INFORMATION AVAILABLE AT THE TIME OF APPROVAL FOR PRINTING. Honda Motor Co., Ltd. RESERVES THE RIGHT TO MAKE CHANGES AT ANY TIME WITHOUT NOTICE AND WITHOUT INCURRING ANY OBLIGATION WHATSOEVER. NO PART OF THIS PUBLICATION MAY BE REPRODUCED WITHOUT WRITTEN PERMISSION. THIS MANUAL IS WRITTEN FOR PERSONS WHO HAVE ACQUIRED BASIC KNOWLEDGE OF MAINTENANCE ON Honda MOTORCYCLES, MOTOR SCOOTERS OR ATVS.

© Honda Motor Co., Ltd.
SERVICE PUBLICATION OFFICE

Date of Issue: November, 2020

SYMBOLS

The symbols used throughout this manual show specific service procedures. If supplementary information is required pertaining to these symbols, it would be explained specifically in the text without the use of the symbols.

	Replace the part(s) with new one(s) before assembly.
	Use the recommend engine oil, unless otherwise specified.
	Use molybdenum oil solution (mixture of the engine oil and molybdenum grease in a ratio of 1:1).
	Use multi-purpose grease (lithium based multi-purpose grease NLGI #2 or equivalent).
	Use molybdenum disulfide grease (containing more than 3% molybdenum disulfide, NLGI #2 or equivalent). Example: • Molykote® BR-2 plus manufactured by Dow Corning U.S.A. • Multi-purpose M-2 manufactured by Mitsubishi Oil, Japan
	Use molybdenum disulfide paste (containing more than 40% molybdenum disulfide, NLGI #2 or equivalent). Example: • Molykote® G-n Paste manufactured by Dow Corning U.S.A. • Pro Honda M-77 Assembly Paste (Moly) (U.S.A. only) • Rocol ASP manufactured by Rocol Limited, U.K. • Rocol Paste manufactured by Sumico Lubricant, Japan
	Use silicone grease.
	Apply locking agent. Use a medium strength locking agent unless otherwise specified.
	Apply sealant.
	Use DOT 4 brake fluid. Use the recommended brake fluid unless otherwise specified.
	Use fork or suspension fluid.

CONTENTS

	GENERAL INFORMATION	1
	FRAME/BODY PANELS/EXHAUST SYSTEM	2
	MAINTENANCE	3
ENGINE/ELECTRICAL	PGM-FI SYSTEM	4
	IGNITION SYSTEM	5
	ELECTRIC STARTER	6
	FUEL SYSTEM	7
	COOLING SYSTEM	8
	LUBRICATION SYSTEM	9
	CYLINDER HEAD/VALVE/CAMSHAFT	10
	ALTERNATOR/STARTER CLUTCH	11
	CLUTCH/GEARSHIFT LINKAGE (MT type)	12
	DUAL CLUTCH TRANSMISSION (DCT type)	13
	CRANKCASE/TRANSMISSION/BALANCER	14
	CRANKSHAFT/PISTON/CYLINDER	15
	ENGINE REMOVAL/INSTALLATION	16
CHASSIS	FRONT WHEEL/SUSPENSION/STEERING	17
	REAR WHEEL/SUSPENSION	18
	HYDRAULIC BRAKE	19
FRAME ELECTRICAL	ANTI-LOCK BRAKE SYSTEM (ABS)	20
	BATTERY/CHARGING SYSTEM	21
	LIGHTS/METERS/SWITCHES	22
	WIRING DIAGRAM	23
	INDEX	

MEMO

1. GENERAL INFORMATION

SERVICE RULES 1-2
MODEL IDENTIFICATION 1-3
SPECIFICATIONS 1-4
TORQUE VALUES 1-11
LUBRICATION & SEAL POINTS 1-21
SPECIAL TOOL LIST 1-24
CABLE & HARNESS ROUTING 1-27
EMISSION CONTROL SYSTEMS 1-60
TECHNICAL FEATURES 1-64

SERVICE RULES

1. Use Honda Genuine or Honda-recommended parts and lubricants or their equivalents. Parts that don't meet Honda's design specifications may cause damage to the motorcycle.
2. Use the special tools designed for this product to avoid damage and incorrect assembly.
3. Use only metric tools when servicing the motorcycle. Metric bolts, nuts and screws are not interchangeable with English fasteners.
4. Install new gaskets, O-rings, cotter pins, and lock plates when reassembling.
5. When tightening bolts or nuts, begin with the larger diameter or inner bolt first. Then tighten to the specified torque diagonally in incremental steps unless a particular sequence is specified.
6. Clean parts in cleaning solvent upon disassembly. Lubricate any sliding surfaces before reassembly.
7. After reassembly, check all parts for proper installation and operation.
8. Route all electrical wires as shown in the Cable and Harness Routing (page 1-27).
9. Do not bend or twist control cables. Damaged control cables will not operate smoothly and may stick or bind.

ABBREVIATION

Throughout this manual, the following abbreviations are used to identify the respective parts or systems.

Abbrev. term	Full term
ABS	Anti-lock Brake System
A/F sensor	Air/Fuel sensor
APS	Accelerator Position Sensor
CAN	Controller Area Network
CKP sensor	Crankshaft Position sensor
DCT	Dual Clutch Transmission
DLC	Data Link Connector
DTC	Diagnostic Trouble Code
ECM	Engine Control Module
ECT sensor	Engine Coolant Temperature sensor
ECV	Exhaust Control Valve
EOP sensor	Engine Oil Pressure sensor
EOP switch	Engine Oil Pressure switch
EOT sensor	Engine Oil Temperature sensor
EVAP	Evaporative Emission
GP sensor	Gear Position sensor
IAT sensor	Intake Air Temperature sensor
IMU	Inertia Measurement Unit
MAP sensor	Manifold Absolute Pressure sensor
MCS	Motorcycle Communication System
MIL	Malfunction Indicator Lamp
MT	Manual Transmission
OBD	On-Board Diagnostic
PAIR	Pulse Secondary Air Injection
PGM-FI	Programmed Fuel Injection
SCS	Service Check Signal
TBW	Throttle By Wire
TCM	Transmission Control Module
TP sensor	Throttle Position sensor
TR sensor	Transmission Range sensor
VS sensor	Vehicle Speed sensor

DESTINATION CODE

Throughout this manual, the following codes are used to identify individual models for each region.

DESTINATION CODE	REGION
AC	50-State, meets California
CM	Canada

MODEL IDENTIFICATION





SERIAL NUMBERS/LABELS

The motorcycle Identification Number (V.I.N) [1] is stamped on the right side of the steering head.

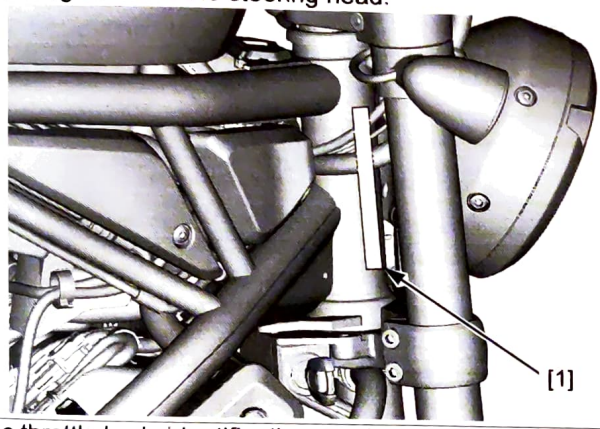

The engine serial number [1] is stamped on the crankcase as shown.

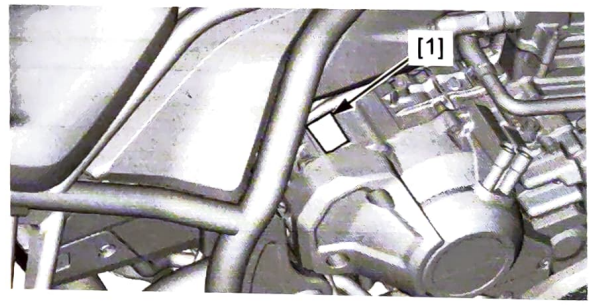

The throttle body identification number [1] is stamped on the left side of the throttle body as shown.

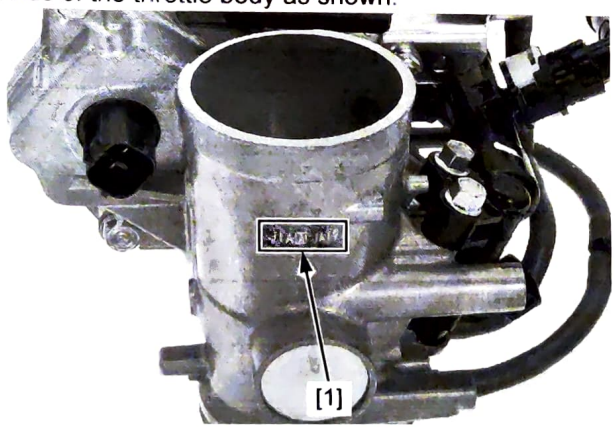

The color label [1] is attached on the left side of the battery case.
When ordering color-coded parts, always specify the designated color code.

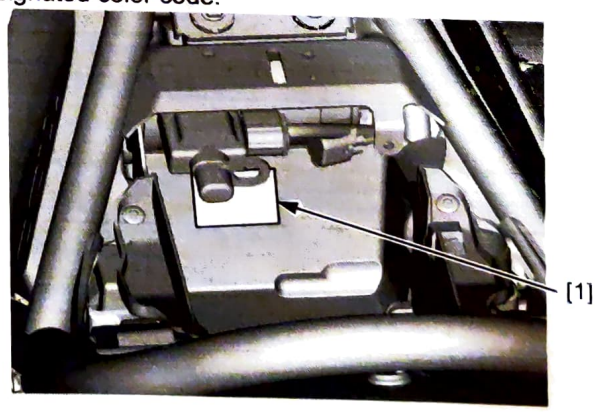

TYPES

TYPE CODE	DESTINATION CODE	Manual Transmission (MT)	DUAL CLUTCH TRANSMISSION (DCT)	Passenger seat
CMX1100A	AC	O	–	–
CMX1100D		–	O	–
CMX1100A	CM	O	–	O
CMX1100D		–	O	O

SPECIFICATIONS

GENERAL SPECIFICATIONS

ITEM					SPECIFICATIONS
DIMENSIONS	Overall length				2,240 mm (88.2 in)
	Overall width	CMX1100A			853 mm (33.6 in)
		CMX1100D			834 mm (32.8 in)
	Overall height				1,115 mm (43.9 in)
	Wheelbase				1,520 mm (59.8 in)
	Seat height				700 mm (27.6 in)
	Footpeg height				290 mm (11.4 in)
	Ground clearance				120 mm (4.7 in)
	Curb weight	CMX1100A	AC		221 kg (487 lbs)
			CM		223 kg (491 lbs)
		CMX1100D	AC		231 kg (509 lbs)
			CM		233 kg (514 lbs)
	Maximum weight capacity				158 kg (348 lbs)
FRAME	Frame type				Diamond
	Front suspension				Telescopic fork
	Front axle travel				121 mm (4.8 in)
	Rear suspension				Swingarm
	Rear axle travel				95 mm (3.7 in)
	Front tire size				130/70B18M/C 63H
	Rear tire size				180/65B16M/C 81H Reinforced
	Front tire brand				D428F (DUNLOP)
	Rear tire brand				D428 (DUNLOP)
	Front brake				Hydraulic single disc
	Rear brake				Hydraulic single disc
	Caster angle				28°
	Trail length				110 mm (4.3 in)
	Fuel tank capacity				13.6 liters (3.59 US gal, 2.99 Imp gal)
ENGINE	Cylinder arrangement				2 cylinders in-line, slant angle 22.5°
	Bore and stroke				92 x 81.5 mm (3.6 x 3.21 in)
	Displacement				1,084 cm^3 (66.1 cu-in)
	Compression ratio				10.1 ± 0.2: 1
	Valve train				Chain driven, OHC with valve lifter and rocker arm
	Intake valve	No.1 Cylinder	opens	at 1 mm (0.04 in) lift	2.5° BTDC
			closes	at 1 mm (0.04 in) lift	42.5° ABDC
		No.2 Cylinder	opens	at 1 mm (0.04 in) lift	5° BTDC
			closes	at 1 mm (0.04 in) lift	30° ABDC
	Exhaust valve	No.1 Cylinder	opens	at 1 mm (0.04 in) lift	40° BBDC
			closes	at 1 mm (0.04 in) lift	7.5° ATDC
		No.2 Cylinder	opens	at 1 mm (0.04 in) lift	36° BBDC
			closes	at 1 mm (0.04 in) lift	2.5° ATDC
	Lubrication system				Forced pressure and dry sump
	Oil pump type				Trochoid
	Cooling system				Liquid cooled
	Air filtration				Viscous paper element
	Engine dry weight			MT type	67.4 kg (148.6 lbs)
				DCT type	75.8 kg (167.2 lbs)
	Firing order				1-2

ITEM			SPECIFICATIONS
FUEL DELIVERY SYSTEM	Type		PGM-FI
	Throttle bore		46 mm (1.8 in)
DRIVE TRAIN (MT type)	Clutch system		Multi-plate, wet
	Clutch operation system		Cable operating
	Transmission		Constant mesh, 6-speeds
	Primary reduction		1.717 (79/46)
	Final reduction		2.625 (42/16)
	Gear ratio	1st	2.866 (43/15)
		2nd	1.888 (34/18)
		3rd	1.480 (37/25)
		4th	1.230 (32/26)
		5th	1.064 (33/31)
		6th	0.972 (35/36)
	Gearshift pattern		Left foot operated return system, 1 - N - 2 - 3 - 4 - 5 - 6
DRIVE TRAIN (DCT type)	Clutch system		2 Multi-plate wet clutches
	Clutch operation system		Automatic
	Transmission		6-speeds
	Primary reduction		1.863 (82/44)
	Final reduction		2.625 (42/16)
	Gear ratio	1st	2.562 (41/16)
		2nd	1.761 (37/21)
		3rd	1.375 (33/24)
		4th	1.133 (34/30)
		5th	0.972 (36/37)
		6th	0.882 (30/34)
	Gearshift pattern		Automatic and electric shift (left hand operated) return system, N - 1 - 2 - 3 - 4 - 5 - 6
ELECTRICAL	Ignition system		Full transistorized ignition
	Starting system		Electric starter motor
	Charging system		Triple phase output alternator
	Regulator/rectifier		FET shorted/triple phase full wave rectification
	Lighting system		Battery

PGM-FI SYSTEM SPECIFICATIONS

ITEM		SPECIFICATIONS
IAT sensor resistance (at 40°C/104°F)		1.0 – 1.3 kΩ
Fuel injector resistance (at 20°C/68°F)		11 – 13 Ω
A/F sensor heater resistance (at room temperature)		3.6 – 6.0 Ω
EVAP purge control solenoid valve resistance (at 20°C/68°F)		30 – 34 Ω
PAIR control solenoid valve resistance (at 20°C/68°F)		24 – 28 Ω
ECT sensor resistance	40°C (104°F)	1.0 – 1.3 kΩ
	100°C (212°F)	0.14 – 0.18 kΩ

IGNITION SYSTEM SPECIFICATIONS

ITEM	SPECIFICATIONS
Spark plug	SILMAR8A9S (NGK)
Spark plug gap	0.8 – 0.9 mm (0.03 – 0.04 in)
Ignition coil primary peak voltage	100 V minimum
Ignition timing ("F"mark)	10° BTDC at idle

FUEL SYSTEM SPECIFICATIONS

ITEM	SPECIFICATIONS
Throttle body identification number	GNJ2A
Engine idle speed	1,250 ± 100 rpm
Fuel pressure at idle	324 – 367 kPa (3.3 – 3.7 kgf/cm², 47 – 53 psi)
Fuel pump flow (at 12 V)	319 cm³ (10.8 US oz, 11.2 Imp oz) minimum/10 seconds

COOLING SYSTEM SPECIFICATIONS

ITEM		SPECIFICATIONS
Coolant capacity	Radiator and engine	1.74 liters (1.84 US qt, 1.53 Imp qt)
	Reserve tank	0.72 liter (0.76 US qt, 0.63 Imp qt)
Radiator cap relief pressure		108 – 137 kPa (1.1 – 1.4 kgf/cm², 16 – 20 psi)
Thermostat	Begin to open	80 – 84°C (176 – 183°F)
	Fully open	95°C (203°F)
	Valve lift	8 mm (0.3 in) minimum
Recommended antifreeze		Pro Honda HP Coolant or an equivalent high quality ethylene glycol antifreeze containing corrosion protection inhibitors
Standard coolant concentration		1:1 mixture with distilled water

LUBRICATION SYSTEM SPECIFICATIONS

Unit: mm (in)

ITEM			STANDARD	SERVICE LIMIT
Engine oil capacity	MT type	After draining	3.9 liters (4.1 US qt, 3.4 Imp qt)	–
		After draining/engine oil filter change	4.0 liters (4.2 US qt, 3.5 Imp qt)	–
		After disassembly	4.8 liters (5.1 US qt, 4.2 Imp qt)	–
	DCT type	After draining	4.0 liters (4.2 US qt, 3.5 Imp qt)	–
		After draining/engine oil filter/clutch oil filter change	4.2 liters (4.4 US qt, 3.7 Imp qt)	–
		After disassembly	5.2 liters (5.5 US qt, 4.6 Imp qt)	–
Recommended engine oil			Pro Honda GN4 4-stroke oil (U.S.A. & Canada) or equivalent motorcycle oil API service classification: SJ or higher JASO T903 standard: MA Viscosity: SAE 10W-30	–
Oil pressure (at oil filter cartridge)			614 kPa (6.3 kgf/cm², 89 psi) at 5,000 rpm (80°C/176°F)	–
Oil pump rotor	Tip clearance		0.15 (0.006)	0.20 (0.008)

CYLINDER HEAD/VALVE/CAMSHAFT SPECIFICATIONS

Unit: mm (in)

ITEM				STANDARD	SERVICE LIMIT
Cylinder compression at 500 rpm				1.4 MPa (14.3 kgf/cm², 203 psi)	–
Valve clearance	IN	Between valve lifter and cam lobe		0.16 ± 0.03 (0.006 ± 0.001)	–
	EX	Between rocker arm roller and cam lobe		0.23 ± 0.02 (0.009 ± 0.001)	–
		Between valve and adjusting screw		0.30 ± 0.03 (0.012 ± 0.001)	–
Valve, valve guide	Valve stem O.D.		IN	5.475 – 5.490 (0.2156 – 0.2161)	5.465 (0.2152)
			EX	5.465 – 5.480 (0.2152 – 0.2157)	5.455 (0.2148)
	Valve guide I.D.		IN/EX	5.500 – 5.512 (0.2165 – 0.2170)	5.552 (0.2186)
	Valve guide projection above cylinder head		IN	12.9 – 13.2 (0.51 – 0.52)	–
			EX	15.1 – 15.4 (0.59 – 0.61)	–
	Valve seat width		IN	1.1 – 1.3 (0.04 – 0.05)	1.5 (0.06)
			EX	1.3 – 1.5 (0.05 – 0.06)	1.9 (0.07)
Valve spring	Free length		IN	41.23 (1.623)	40.41 (1.591)
			EX	40.93 (1.611)	40.11 (1.579)
Valve lifter	Valve lifter O.D.		IN	31.978 – 31.993 (1.2590 – 1.2596)	31.97 (1.259)
	Valve lifter bore I.D.		IN	32.010 – 32.026 (1.2602 – 1.2609)	32.04 (1.261)

ITEM			STANDARD	SERVICE LIMIT
Rocker arm	Arm I.D.	EX	12.000 – 12.018 (0.4724 – 0.4731)	12.05 (0.474)
	Shaft O.D.	EX	11.977 – 11.990 (0.4715 – 0.4720)	–
Camshaft	Cam lobe height	IN	40.740 – 40.980 (1.6039 – 1.6133)	40.710 (1.603)
		EX	41.240 – 41.480 (1.6236 – 1.6330)	41.210 (1.622)
	Oil clearance		0.020 – 0.062 (0.0008 – 0.0024)	0.10 (0.004)
Cylinder head warpage			–	0.10 (0.004)

ALTERNATOR/STARTER CLUTCH SPECIFICATIONS

Unit: mm (in)

ITEM		STANDARD	SERVICE LIMIT
Starter driven gear boss	O.D.	57.749 – 57.768 (2.2736 – 2.2743)	–
	I.D.	44.000 – 44.016 (1.7323 – 1.7329)	–

CLUTCH/GEARSHIFT LINKAGE SPECIFICATIONS (MT type)

Unit: mm (in)

ITEM		STANDARD	SERVICE LIMIT
Clutch lever freeplay		10 – 20 (3/8 - 13/16)	–
Clutch	Spring free length	45.0 (1.77)	44.1 (1.74)
	Disc thickness	2.72 – 2.88 (0.107 – 0.113)	2.5 (0.10)
	Plate warpage	–	0.20 (0.008)
	Primary driven gear I.D.	41.958 – 41.983 (1.6519 – 1.6529)	–
Clutch outer guide	O.D.	34.975 – 34.991 (1.3770 – 1.3776)	–
	I.D.	28.000 – 28.021 (1.1024 – 1.1032)	–
Mainshaft O.D. at clutch outer guide		27.967 – 27.980 (1.1011 – 1.1016)	–

DUAL CLUTCH TRANSMISSION SPECIFICATIONS (DCT type)

Unit: mm (in)

ITEM	STANDARD	SERVICE LIMIT
Clutch initial clearance	0.70 – 0.90 (0.028 – 0.035)	1.3 (0.05)
EOT sensor resistance (20°C/68°F)	2.5 – 2.8 kΩ	–

CRANKCASE/TRANSMISSION/BALANCER SPECIFICATIONS

MT type:

Unit: mm (in)

ITEM			STANDARD	SERVICE LIMIT
Transmission	Gear I.D.	M5, M6	31.000 – 31.025 (1.2205 – 1.2215)	–
		C1	25.000 – 25.021 (0.9843 – 0.9851)	–
		C2, C3, C4	33.000 – 33.025 (1.2992 – 1.3002)	–
	Gear bushing O.D.	M5	30.955 – 30.980 (1.2187 – 1.2197)	–
		M6	30.950 – 30.975 (1.2185 – 1.2195)	–
		C1	24.959 – 24.980 (0.9826 – 0.9835)	–
		C2	32.955 – 32.980 (1.2974 – 1.2984)	–
		C3, C4	32.950 – 32.975 (1.2972 – 1.2982)	–
	Gear bushing I.D.	M5	27.985 – 28.006 (1.1018 – 1.1026)	–
		C1	21.985 – 22.006 (0.8655 – 0.8664)	–
		C2	29.985 – 30.006 (1.1805 – 1.1813)	–
	Mainshaft O.D.	at M5	27.967 – 27.980 (1.1011 – 1.1016)	–
	Countershaft O.D.	at C1	21.987 – 22.000 (0.8656 – 0.8661)	–
		at C2	29.967 – 29.980 (1.1798 – 1.1803)	–
Shift fork, fork shaft	Fork I.D.		12.000 – 12.018 (0.4724 – 0.4731)	–
	Claw thickness		5.93 – 6.00 (0.233 – 0.236)	5.83 (0.230)
	Shift fork shaft O.D.		11.957 – 11.968 (0.4707 – 0.4712)	–

DCT type:

Unit: mm (in)

ITEM			STANDARD	SERVICE LIMIT
Transmission	Gear I.D.	M5	35.000 – 35.025 (1.3780 – 1.3789)	–
		M6	43.000 – 43.025 (1.6929 – 1.6939)	–
		C1	35.000 – 35.025 (1.3780 – 1.3789)	–
		C2	25.000 – 25.021 (0.9843 – 0.9851)	–
		C3, C4	33.000 – 33.025 (1.2992 – 1.3002)	–
	Gear bushing O.D.	M5	34.950 – 34.975 (1.3760 – 1.3770)	–
		M6	42.950 – 42.975 (1.6909 – 1.6919)	–
		C1	34.950 – 34.975 (1.3760 – 1.3770)	–
		C2	24.959 – 24.980 (0.9826 – 0.9835)	–
		C3, C4	32.950 – 32.975 (1.2972 – 1.2982)	–
	Gear bushing I.D.	M5	32.000 – 32.025 (1.2598 – 1.2608)	–
		M6	40.007 – 40.028 (1.5751 – 1.5759)	–
		C1	30.000 – 30.021 (1.1811 – 1.1819)	–
		C2	21.985 – 22.006 (0.8655 – 0.8664)	–
	Inner mainshaft O.D.	M5	31.957 – 31.970 (1.2581 – 1.2587)	–
	Outer mainshaft O.D.	M6	39.975 – 39.991 (1.5738 – 1.5744)	–
	Countershaft O.D.	C1	29.967 – 29.980 (1.1798 – 1.1803)	–
		C2	21.987 – 22.000 (0.8656 – 0.8661)	–
Shift fork	I.D.		12.000 – 12.018 (0.4724 – 0.4731)	5.83 (0.230)
	Claw thickness		5.93 – 6.00 (0.233 – 0.236)	–
	Shaft O.D.		11.957 – 11.968 (0.4707 – 0.4712)	

CRANKSHAFT/PISTON/CYLINDER SPECIFICATIONS

Unit: mm (in)

ITEM			STANDARD	SERVICE LIMIT
Crankshaft	Connecting rod side clearance		0.05 – 0.25 (0.002 – 0.010)	0.35 (0.014)
	Runout		–	0.03 (0.001)
	Main journal bearing oil clearance		0.019 – 0.038 (0.0007 – 0.0015)	0.05 (0.002)
	Crankpin bearing oil clearance		0.027 – 0.045 (0.0011 – 0.0018)	0.065 (0.0026)
Cylinder	I.D.		92.000 – 92.015 (3.6220 – 3.6226)	92.10 (3.626)
Piston, piston pin, piston ring	Piston O.D. at 14.0 mm (0.55 in) from bottom		91.975 – 91.985 (3.6211 – 3.6214)	91.89 (3.618)
	Piston pin hole I.D.		22.002 – 22.008 (0.8662 – 0.8665)	22.02 (0.867)
	Piston pin O.D.		21.994 – 22.000 (0.8659 – 0.8661)	21.98 (0.865)
	Piston ring end gap	Top	0.185 – 0.235 (0.0073 – 0.0093)	0.335 (0.0132)
		Second	0.400 – 0.550 (0.0157 – 0.0217)	0.650 (0.0256)
		Oil (side rail)	0.100 – 0.350 (0.0039 – 0.0138)	0.550 (0.0217)
	Piston ring-to-ring groove clearance	Top	0.015 – 0.045 (0.0006 – 0.0018)	–
		Second	0.015 – 0.050 (0.0006 – 0.0020)	–
Connecting rod small end I.D.			22.026 – 22.040 (0.8672 – 0.8677)	22.050 (0.8681)

FRONT WHEEL/SUSPENSION/STEERING SPECIFICATIONS

Unit: mm (in)

ITEM		STANDARD	SERVICE LIMIT
Cold tire pressure	Up to 90 kg (200 lbs) load	225 kPa (2.25 kgf/cm², 33 psi)	–
	Up to maximum weight capacity	225 kPa (2.25 kgf/cm², 33 psi)	–
Axle runout		–	0.2 (0.01)
Wheel rim runout	Radial	–	1.0 (0.04)
	Axial	–	1.0 (0.04)
Wheel balance weight		–	60 g (2.1 oz) max.
Fork	Spring free length	366.7 (14.44)	359.4 (14.15)
	Recommended fork fluid	Fork Fluid (viscosity: 10W)	–
	Fluid level	R: 160 (6.3) L: 162 (6.4)	–
	Fluid capacity	R: 484 ± 2.5 cm³ (16.4 ± 0.08 US oz, 17.0 ± 0.09 Imp oz) L: 447 ± 2.5 cm³ (15.1 ± 0.08 US oz, 15.7 ± 0.09 Imp oz)	–
	Pre-load adjuster standard position	9.0 (0.35) from the top surface of the fork bolt	–

REAR WHEEL/SUSPENSION SPECIFICATIONS

Unit: mm (in)

ITEM			STANDARD	SERVICE LIMIT
Cold tire pressure	Up to 90 kg (200 lbs) load		225 kPa (2.25 kgf/cm², 33 psi)	–
	Up to maximum weight capacity		225 kPa (2.25 kgf/cm², 33 psi)	–
Axle runout			–	0.2 (0.01)
Wheel rim runout		Radial	–	1.0 (0.04)
		Axial	–	1.0 (0.04)
Wheel balance weight			–	60 g (2.1 oz) max.
Drive chain	Slack		15 – 25 (9/16 – 1)	50 (1-15/16)
	Size/link		RK: BP525MRO-114LJFZ	–
Shock absorber	Pre-load adjuster standard position		3 clicks from full soft position (first click is "0" position)	–

HYDRAULIC BRAKE SPECIFICATIONS

Unit: mm (in)

ITEM			STANDARD	SERVICE LIMIT
Front	Specified brake fluid		Honda DOT 4 brake fluid	–
	Brake disc thickness		5.3 - 5.5 (0.21 – 0.22)	4.5 (0.18)
	Brake disc warpage		–	0.30 (0.012)
	Master cylinder I.D.		12.700 – 12.743 (0.5000 – 0.5017)	–
	Master piston O.D.		12.657 – 12.684 (0.4983 – 0.4994)	–
	Caliper cylinder I.D.	Upper	32.030 – 32.080 (1.2610 – 1.2630)	–
		Lower	30.230 – 30.280 (1.1902 – 1.1921)	–
	Caliper piston O.D.	Upper	31.948 – 31.998 (1.2578 – 1.2598)	–
		Lower	30.148 – 30.198 (1.1869 – 1.1889)	–
Rear	Specified brake fluid		Honda DOT 4 brake fluid	–
	Master cylinder push rod length		70.0 – 72.0 (2.76 – 2.83)	–
	Brake disc thickness		5.3 – 5.7 (0.21 – 0.22)	4.5 (0.18)
	Brake disc warpage		–	0.30 (0.012)
	Master cylinder I.D.		12.700 – 12.743 (0.5000 – 0.5017)	–
	Master piston O.D.		12.657 – 12.684 (0.4983 – 0.4994)	–
	Caliper cylinder I.D.		38.18 – 38.23 (1.503 – 1.505)	–
	Caliper piston O.D.		38.098 – 38.148 (1.4999 – 1.5019)	–
	Parking cable adjust distance		43 (1.7)	–

BATTERY/CHARGING SYSTEM SPECIFICATIONS

ITEM			SPECIFICATIONS
Battery	Type		YTZ14S
	Capacity		12 V – 11.2 Ah (10 HR)
	Current leakage		0.2 mA max.
	Voltage (20°C/68°F)	Fully charged	13.0 - 13.2 V
		Needs charging	Below 12.3 V
Alternator	Capacity		0.419 kW/5,000 rpm
	Charging coil resistance (20°C/68°F)		0.1 – 1.0 Ω

LIGHTS/METERS/SWITCHES SPECIFICATIONS

ITEM			SPECIFICATIONS
Bulbs	Headlight	Hi	LED
		Lo	LED
	Brake/taillight		LED
	Front turn signal light/position light		LED
	Rear turn signal light		LED
	License light		LED
	Instrument light		LED
	ABS indicator		LED
	Auto cruise set indicator		LED
	High beam indicator		LED
	Coolant temperature indicator		LED
	Low oil pressure indicator (MT type)		LED
	MIL		LED
	Neutral indicator		LED
	Parking brake indicator (DCT type)		LED
	Torque control indicator		LED
	Torque control OFF indicator		LED
	Turn signal indicator		LED
Fuse	Main fuse		30 A
	Main2 fuse		30 A
	FI fuse		15 A
	ABS-M fuse		30 A
	DCT-M fuse (DCT type)		30 A
	Sub fuse		20 A x 2, 10 A x 8, 7.5 A x 2
Open air temperature sensor resistance (25°C/77°F)			4.9 – 5.1 kΩ
Fuel level sensor resistance	Full		6 – 10 Ω
	Empty		266 – 274 Ω

TORQUE VALUES

STANDARD TORQUE VALUES

FASTENER TYPE	TORQUE N·m (kgf·m, lbf·ft)	FASTENER TYPE	TORQUE N·m (kgf·m, lbf·ft)
5 mm bolt and nut	5.2 (0.5, 3.8)	5 mm screw	4.2 (0.4, 3.1)
6 mm bolt (Include SH flange bolt) and nut	10 (1.0, 7)	6 mm screw	9.0 (0.9, 6.6)
8 mm bolt and nut	22 (2.2, 16)	6 mm flange bolt (Include NSHF) and nut	12 (1.2, 9)
10 mm bolt and nut	34 (3.5, 25)	8 mm flange bolt and nut	27 (2.8, 20)
12 mm bolt and nut	54 (5.5, 40)	10 mm flange bolt and nut	39 (4.0, 29)

ENGINE & FRAME TORQUE VALUES

FRAME BODY PANELS/EXHAUST SYSTEM

ITEM	Q'TY	THREAD DIA. (mm)	TORQUE N·m (kgf·m, lbf·ft)	REMARKS
Rearview mirror adaptor	1	10	19 (1.9, 14)	
Rearview mirror nut	1	10	19 (1.9, 14)	
Front reflector mounting nut	2	6	1.5 (0.2, 1.1)	
Rear fender mounting socket bolt	4	10	44 (4.5, 32)	
Rear fender mounting bolt	2	10	44 (4.5, 32)	
Muffler band bolt	2	8	22 (2.2, 16)	
Muffler cover mounting socket bolt	1	6	9.0 (0.9, 6.6)	
Tail cap cover mounting socket bolt	2	6	9.0 (0.9, 6.6)	
Exhaust pipe joint nut	4	8	20 (2.0, 15)	
Exhaust pipe stud bolt	4	8	–	See page 2-17
Sidestand pivot bolt	1	10	10 (1.0, 7)	See page 2-15
Sidestand pivot nut	1	10	29 (3.0, 21)	See page 2-15
Clutch EOP sensor cover (DCT type)	4	6	10 (1.0, 7)	
Right rear engine cover (MT type)	2	6	10 (1.0, 7)	
Connector box screw	1	4	1.0 (0.1, 0.7)	
Drive sprocket cover mounting bolt	2	6	12 (1.2, 9)	

MAINTENANCE

ITEM	Q'TY	THREAD DIA. (mm)	TORQUE N·m (kgf·m, lbf·ft)	REMARKS
Air cleaner element mounting screw	4	5	1.1 (0.1, 0.8)	Tapping screw
Air cleaner cover screw	6	5	1.1 (0.1, 0.8)	Tapping screw
Spark plug	4	10	22 (2.2, 16)	
Valve adjusting screw lock nut	4	5	10 (1.0, 7)	Apply engine oil to the threads and seating surface.
Timing hole cap	1	14	6.0 (0.6, 4.4)	Apply grease to the threads.
Crankshaft hole cap	1	30	8.0 (0.8, 5.9)	Apply grease to the threads.
Engine oil drain bolt	2	12	30 (3.1, 22)	
Oil filter boss (crankcase side)	1	20	–	Apply locking agent to the threads. See page 3-13
Engine oil filter cartridge	1	20	26 (2.7, 19)	Apply engine oil to the threads.
Clutch oil filter cover bolt (DCT type)	2	6	12 (1.2, 9)	
Rear axle nut	1	18	100 (10.2, 74)	Self-lock nut
Drive chain adjuster lock nut	2	10	21 (2.1, 15)	
Drive sprocket bolt	1	10	54 (5.5, 40)	
Driven sprocket nut	5	12	108 (11.0, 79)	Self-lock nut
Parking brake adjuster lock nut (DCT type)	1	8	17 (1.8, 13)	
Clutch cable lock nut	1	8	8.5 (0.9, 6.3)	

PGM-FI SYSTEM

ITEM	Q'TY	THREAD DIA. (mm)	TORQUE N·m (kgf·m, lbf·ft)	REMARKS
A/F sensor	2	12	24.5 (2.5, 18)	
IAT sensor mounting screw	2	5	1.1 (0.1, 0.8)	
ECT sensor	1	10	12 (1.2, 9)	
GP sensor mounting bolt (MT type)	1	6	12 (1.2, 9)	
CKP sensor bolt	1	6	12 (1.2, 9)	
Bank angle sensor mounting nut	2	6	10 (1.0, 7)	

IGNITION SYSTEM

ITEM	Q'TY	THREAD DIA. (mm)	TORQUE N·m (kgf·m, lbf·ft)	REMARKS
Timing hole cap	1	14	6.0 (0.6, 4.4)	Apply grease to the threads.

ELECTRIC STARTER

ITEM	Q'TY	THREAD DIA. (mm)	TORQUE N·m (kgf·m, lbf·ft)	REMARKS
Starter motor cable terminal nut/ washer	1	6	10 (1.0, 7)	
Starter motor setting bolt	2	5	4.9 (0.5, 3.6)	
Negative brush screw/washer	1	5	3.7 (0.4, 2.7)	

FUEL SYSTEM

ITEM	Q'TY	THREAD DIA. (mm)	TORQUE N·m (kgf·m, lbf·ft)	REMARKS
Fuel filler cap bolt	3	4	1.8 (0.2, 1.3)	
Fuel pump unit mounting cap nut	3	6	12 (1.2, 9)	See page 7-7
Fuel pump unit mounting nut	2	6	12 (1.2, 9)	
Insulator band screw	2	5	–	See page 7-11
Fuel injector assembly mounting bolt	4	5	5.1 (0.5, 3.8)	
MAP sensor screw	1	6	4.9 (0.5, 3.6)	
Front fuel tank mounting socket bolt	1	8	26 (2.7, 19)	
Rear fuel tank mounting bolt	2	6	12 (1.2, 9)	

COOLING SYSTEM

ITEM	Q'TY	THREAD DIA. (mm)	TORQUE N·m (kgf·m, lbf·ft)	REMARKS
Coolant drain bolt	1	6	13 (1.3, 10)	
Thermostat cover bolt	2	6	12 (1.2, 9)	
Water hose band screw	6	–	–	See page 8-7
Fan motor shroud bolt	6	6	8.5 (0.9, 6.3)	
Cooling fan mounting nut	1	3	2.8 (0.3, 2.1)	Apply locking agent to the threads.
Fan motor mounting bolt	3	5	5.1 (0.5, 3.8)	
Water pump cover bolt	4	6	13 (1.3, 10)	Apply locking agent to the threads. (*1) See page 1-20

LUBRICATION SYSTEM

ITEM	Q'TY	THREAD DIA. (mm)	TORQUE N·m (kgf·m, lbf·ft)	REMARKS
Engine oil filter cartridge	1	20	26 (2.7, 19)	Apply engine oil to the threads.
Oil pump mounting bolt	3	6	16 (1.6, 12)	
Flange bolt	6	6	12 (1.2, 9)	
Sealing bolt (22 mm)	1	22	30 (3.1, 22)	Apply locking agent to the threads.
Sealing bolt (24 mm) (DCT type)	1	24	30 (3.1, 22)	Apply locking agent to the threads.
Oil pump driven gear set plate bolt	1	6	12 (1.2, 9)	Apply locking agent to the threads. (*1) See page 1-20

CYLINDER HEAD/VALVE/CAMSHAFT

ITEM	Q'TY	THREAD DIA. (mm)	TORQUE N·m (kgf·m, lbf·ft)	REMARKS
Cylinder head cover bolt	3	6	10 (1.0, 7)	
Rocker arm shaft bolt	2	6	12 (1.2, 9)	Apply engine oil to the threads and seating surface.
Rocker arm shaft stopper bolt	1	14	18 (1.8, 13)	
Camshaft holder bolt	6	6	12 (1.2, 9)	Apply engine oil to the threads and seating surface.
Cam sprocket bolt	2	7	20 (2.0, 15)	Apply locking agent to the threads. (*2) See page 1-20
Cam chain tensioner pivot bolt	1	8	23 (2.3, 17)	Apply locking agent to the threads. (*1) See page 1-20
Cylinder head bolt/washer	6	12	83 (8.5, 61)	Apply molybdenum oil solution to the threads and seating surface. Apply engine oil to the washer.
Insulator mounting bolt	4	6	12 (1.2, 9)	

ALTERNATOR/STARTER CLUTCH

ITEM	Q'TY	THREAD DIA. (mm)	TORQUE N·m (kgf·m, lbf·ft)	REMARKS
Alternator cover bolt	12	6	12 (1.2, 9)	
Stator bolt	5	6	12 (1.2, 9)	Apply locking agent to the threads. (*1) See page 1-20
Flywheel mounting bolt	1	12	137 (14.0, 101)	Apply engine oil to the threads and seating surface.
Starter clutch torx bolt	6	8	29 (3.0, 21)	Apply locking agent to the threads. (*2) See page 1-20

CLUTCH/GEARSHIFT LINKAGE (MT type)

ITEM	Q'TY	THREAD DIA. (mm)	TORQUE N·m (kgf·m, lbf·ft)	REMARKS
Right crankcase cover bolt	15	6	12 (1.2, 9)	
Clutch center lock nut	1	25	128 (13.1, 94)	Apply engine oil to the threads and seating surface. Stake.
Clutch set plate bolt	3	6	12 (1.2, 9)	
Primary drive gear bolt	1	10	103 (10.5, 76)	Apply engine oil to the threads and seating surface.
Shift drum stopper arm pivot bolt	1	6	12 (1.2, 9)	Apply locking agent to the threads. (*1) See page 1-20
Shift drum center bolt	1	8	23 (2.3, 17)	Apply locking agent to the threads. (*2) See page 1-20
Gearshift spindle set plate bolt	1	6	12 (1.2, 9)	Apply locking agent to the threads. (*1) See page 1-20
Gearshift spindle cover bolt	2	6	12 (1.2, 9)	
Gearshift pedal pivot bolt	1	8	26 (2.7, 19)	
Gearshift pedal height adjuster lock nut	2	6	10 (1.0, 7)	
Clutch lever pivot bolt	1	6	1.0 (0.1, 0.7)	
Clutch lever pivot nut	1	6	5.9 (0.6, 4.4)	Self-lock nut
Clutch switch mounting screw	1	3	1.5 (0.2, 1.1)	Apply locking agent to the threads.
Clutch cruise cancel switch mounting screw	1	3	1.5 (0.2, 1.1)	Apply locking agent to the threads.
Clutch cable lock nut	1	8	8.5 (0.9, 6.3)	

DUAL CLUTCH TRANSMISSION (DCT type)

ITEM	Q'TY	THREAD DIA. (mm)	TORQUE N·m (kgf·m, lbf·ft)	REMARKS
Feed pipe guide plate bolt	2	5	5.0 (0.5, 3.7)	
Feed pipe cover bolt	3	6	12 (1.2, 9)	
Right crankcase cover bolt	15	6	12 (1.2, 9)	
Water pipe bolt	2	6	12 (1.2, 9)	
Clutch EOP sensor wire stay bolt	2	6	12 (1.2, 9)	
Shift spindle angle sensor bolt	1	6	12 (1.2, 9)	
Linear solenoid valve body cover bolt	4	6	12 (1.2, 9)	
Linear solenoid valve stopper plate bolt	1	6	12 (1.2, 9)	Apply locking agent to the threads. (*1) See page 1-20
Linear solenoid valve body mounting bolt	4	6	12 (1.2, 9)	
Primary drive gear nut	1	22	118 (12.0, 87)	Apply engine oil to the threads and seating surface. Left-hand thread
Reduction gear cover torx bolt	3	6	14 (1.4, 10)	
Shift control motor mounting torx bolt	3	6	14 (1.4, 10)	
Shift control motor cover bolt	2	6	12 (1.2, 9)	
Shift drum center bolt	1	8	31 (3.2, 23)	Apply locking agent to the threads. (*2) See page 1-20
Drum shifter guide plate/drum shifter assembly mounting bolt	2	6	12 (1.2, 9)	Apply locking agent to the threads. (*1) See page 1-20
TR sensor mounting bolt	1	6	12 (1.2, 9)	
No.1/No.2 clutch EOP sensor	2	10	20 (2.0, 15)	
Clutch line EOP sensor	1	10	20 (2.0, 15)	
EOT sensor	1	10	15 (1.5, 11)	Apply engine oil to the threads and seating surface.
EOP sensor	1	10	22 (2.2, 16)	
Neutral switch	1	10	12 (1.2, 9)	Apply engine oil to the threads and seating surface.
Neutral switch terminal nut	1	4	1.7 (0.2, 1.3)	

CRANKCASE/TRANSMISSION/BALANCER

ITEM	Q'TY	THREAD DIA. (mm)	TORQUE N·m (kgf·m, lbf·ft)	REMARKS
Front balancer bearing set plate bolt	3	6	12 (1.2, 9)	Apply locking agent to the threads. (*1) See page 1-20
Front balancer shaft bolt	1	10	103 (10.5, 76)	Apply engine oil to the threads and seating surface.
Rear balancer shaft holder bolt	3	8	29 (3.0, 21)	
Mainshaft bearing set plate bolt	3	6	12 (1.2, 9)	Apply locking agent to the threads. (*1) See page 1-20
Shift drum bearing setting bolt/ washer	2	6	12 (1.2, 9)	Apply locking agent to the threads. (*1) See page 1-20
Crankcase main journal bolt	6	10	43 (4.4, 32)	Apply molybdenum oil solution to the threads and seating surface.
Crankcase 10 mm bolt	1	10	39 (4.0, 29)	
Crankcase 8 mm bolt	9	8	24 (2.4, 18)	

CRANKSHAFT/PISTON/CYLINDER

ITEM	Q'TY	THREAD DIA. (mm)	TORQUE N·m (kgf·m, lbf·ft)	REMARKS
Crankpin bearing cap bolt (new)	4	9	22 (2.2, 16) + 120°	Apply engine oil to the threads and seating surface. Replace with a new one.
Crankcase main journal bolt	6	10	43 (4.4, 32)	Apply molybdenum oil solution to the threads and seating surface.
Crankpin bearing cap bolt (retightening)	4	9	22 (2.2, 16) + 90°	Apply engine oil to the threads and seating surface.

ENGINE REMOVAL/INSTALLATION

ITEM	Q'TY	THREAD DIA. (mm)	TORQUE N·m (kgf·m, lbf·ft)	REMARKS
Engine hanger bracket nut	2	10	54 (5.5, 40)	
Swingarm pivot adjust bolt	1	26	10 (1.0, 7)	
Swingarm pivot nut	1	16	80 (8.2, 59)	Apply engine oil to the threads and seating surface. Self-lock nut See page 18-8
Rear upper engine hanger nut	1	8	32 (3.3, 24)	
Front engine hanger nut	1	10	44 (4.5, 32)	
Drive sprocket bolt	1	10	54 (5.5, 40)	
Clutch EOP sensor wire stay bolt	2	6	12 (1.2, 9)	

FRONT WHEEL/SUSPENSION/STEERING

ITEM	Q'TY	THREAD DIA. (mm)	TORQUE N·m (kgf·m, lbf·ft)	REMARKS
Handlebar upper holder socket bolt	4	8	26 (2.7, 19)	
Right handlebar switch screw	2	5	2.5 (0.3, 1.8)	
Front master cylinder holder bolt	2	6	12 (1.2, 9)	
Left handlebar switch screw	2	5	2.5 (0.3, 1.8)	
Handlebar lower holder nut	2	8	26 (2.7, 19)	
Front brake disc bolt	5	8	42 (4.3, 31)	ALOC bolt: replace with a new one.
Pulser ring torx bolt	5	5	7.0 (0.7, 5.2)	ALOC bolt: replace with a new one.
Front axle bolt	1	14	59 (6.0, 43)	
Front axle holder pinch bolt	4	8	22 (2.2, 16)	
Front brake caliper mounting bolt	2	10	45 (4.6, 33)	ALOC bolt: replace with a new one.
Fork cap	2	39	22 (2.2, 16)	
Fork socket bolt	2	8	20 (2.0, 15)	
Bottom bridge pinch bolt	4	8	25 (2.5, 18)	
Top bridge pinch bolt	4	8	22 (2.2, 16)	
Steering stem adjusting nut	1	26	30 (3.1, 22)	See page 17-28
Steering bearing adjusting lock nut	1	26	–	See page 17-28
Steering stem nut	1	24	103 (10.5, 76)	See page 17-28

REAR WHEEL/SUSPENSION

ITEM	Q'TY	THREAD DIA. (mm)	TORQUE N·m (kgf·m, lbf·ft)	REMARKS
Rear axle nut	1	18	100 (10.2, 74)	Self-lock nut
Drive chain adjuster lock nut	2	10	21 (2.1, 15)	
Rear brake disc bolt	4	8	42 (4.3, 31)	ALOC bolt: replace with a new one.
Driven sprocket nut	5	12	108 (11.0, 79)	Apply engine oil to the threads and seating surface. Self-lock nut
Shock absorber upper bolt	2	6	9 (0.9, 6.6)	Self-lock nut
Shock absorber lower bolt	2	8	21 (2.1, 15)	Self-lock nut
Drive chain slider bolt	1	6	9 (0.4, 3.1)	
Swingarm pivot nut	1	16	80 (8.2, 59)	Apply engine oil to the threads and seating surface. Self-lock nut See page 18-8
Swingarm pivot adjust bolt	1	26	10 (1.0, 7)	

HYDRAULIC BRAKE

ITEM	Q'TY	THREAD DIA. (mm)	TORQUE N·m (kgf·m, lbf·ft)	REMARKS
Oil bolt	5	10	34 (3.5, 25)	
Front brake caliper bleed valve	1	8	7.8 (0.8, 5.8)	
Rear brake caliper bleed valve	1	8	5.4 (0.6, 4.0)	
Front master cylinder reservoir cap screw	2	4	1.5 (0.2, 1.1)	
Rear master cylinder reservoir cap screw	2	4	1.5 (0.2, 1.1)	
Front brake caliper mounting bolt	2	10	45 (4.6, 33)	ALOC bolt: replace with a new one.
Front master cylinder holder bolt	2	6	12 (1.2, 9)	
Front brake lever pivot bolt	1	6	1.0 (0.1, 0.7)	
Front brake lever pivot nut	1	6	5.9 (0.6, 4.4)	
Front brake switch mounting screw	1	4	1.2 (0.1, 0.9)	Apply locking agent to the threads.
Rear brake caliper mounting bolt	1	8	22 (2.2, 16)	ALOC bolt: replace with a new one.
Rear brake pad pin	1	10	17 (1.7, 13)	
Rear master cylinder mounting bolt	2	6	12 (1.2, 9)	
Rear master cylinder push rod lock nut	1	8	17.2 (1.8, 13)	
Rear brake caliper pin bolt	1	12	27 (2.8, 20)	
Parking brake cable mounting nut (DCT type)	1	10	10 (1.0, 7)	
Parking brake caliper mounting bolt (DCT type)	2	8	30 (3.1, 22)	ALOC bolt: replace with a new one.
Parking brake pad pin (DCT type)	2	8	17 (1.7, 13)	ALOC bolt: replace with a new one.
Parking brake caliper pin bolt (DCT type)	1	8	22 (2.2, 16)	Apply locking agent to the threads.
Parking brake adjuster bolt lock nut (DCT type)	1	8	17 (1.7, 13)	
Main step bracket mounting socket bolt	4	8	37 (3.8, 27)	

ANTI-LOCK BRAKE SYSTEM (ABS)

ITEM	Q'TY	THREAD DIA. (mm)	TORQUE N·m (kgf·m, lbf·ft)	REMARKS
Brake pipe joint nut	4	10	14 (1.4, 10)	Apply brake fluid to the threads.
Front wheel speed sensor mounting socket bolt	1	6	9 (0.9, 6.6)	

LIGHTS/METERS/SWITCHES

ITEM	Q'TY	THREAD DIA. (mm)	TORQUE N·m (kgf·m, lbf·ft)	REMARKS
Combination meter screw	3	5	1.0 (0.1, 0.7)	
Open air temperature sensor screw	1	4	1.0 (0.1, 0.7)	
EOP switch (MT type)	1	PT 1/8	12 (1.2, 9)	Apply sealant to the threads. See page 22-14
EOP switch terminal bolt/washer (MT type)	1	4	2.0 (0.2, 1.5)	
Ignition switch mounting socket bolt	2	4	1.6 (0.2, 1.2)	
Neutral switch (MT type)	1	10	12 (1.2, 9)	Apply engine oil to the thread and seating surface.
Neutral switch terminal nut (MT type)	1	4	1.7 (0.2, 1.3)	
Sidestand switch mounting bolt	1	6	10 (1.0, 7)	ALOC bolt: replace with a new one.
Headlight case mounting socket bolt	2	8	10 (1.0, 7)	
Turn signal light tapping screw	4	4	0.9 (0.1, 0.7)	
Fuel unit nut	4	6	12 (1.2, 9)	

OTHERS

ITEM	Q'TY	THREAD DIA. (mm)	TORQUE N·m (kgf·m, lbf·ft)	REMARKS
MAP sensor stay mounting screw/ washer	1	6	4.9 (0.5, 3.6)	
Cylinder head sealing bolt (18 mm)	2	18	27 (2.8, 20)	Apply locking agent to the threads.
Cylinder head sealing bolt (14 mm)	2	14	18 (1.8, 13)	
Cylinder head cover breather plate mounting bolt	3	6	13 (1.3, 10)	Apply locking agent to the threads.
Reed valve cover mounting bolt	2	6	12 (1.2, 9)	
Oil pan sealing bolt (14 mm) (DCT type)	1	14	18 (1.8, 13)	Apply locking agent to the threads. Coating width: 5 ± 1 mm (0.2 ± 0.04 in) except 2 ± 1 mm (0.1 ± 0.04 in) from bolt end
Oil pan sealing bolt (16 mm)	1	16	23 (2.3, 17)	Apply locking agent to the threads. Coating width: 5 ± 1 mm (0.2 ± 0.04 in) except 2 ± 1 mm (0.1 ± 0.04 in) from bolt end
Oil pan sealing bolt (20 mm)	1	20	45 (4.6, 33)	Apply locking agent to the threads. Coating width: 5 ± 1 mm (0.2 ± 0.04 in) except 2 ± 1 mm (0.1 ± 0.04 in) from bolt end
Gearshift spindle return spring pin	1	8	23 (2.3, 17)	
Right crankcase cover sealing bolt (6 mm) (DCT type)	5	6	10 (1.0, 7)	
Right crankcase cover sealing bolt (10 mm) (DCT type)	4	10	12 (1.2, 9)	
Right crankcase cover sealing bolt (12 mm) (DCT type)	1	12	16 (1.6, 12)	
Right crankcase cover orifice (DCT type)	1	–	2.0 (0.2, 1.5)	
Upper crankcase sealing bolt (8 mm)	1	8	23 (2.3, 17)	Apply locking agent to the threads. Coating width: 5 ± 1 mm (0.2 ± 0.04 in) except 2 ± 1 mm (0.1 ± 0.04 in) from bolt end
Lower crankcase sealing bolt (10 mm) (DCT type)	1	10	12 (1.2, 9)	Apply locking agent to the threads. Coating width: 4.5 ± 1 mm (0.2 ± 0.04 in) except 2 ± 1 mm (0.1 ± 0.04 in) from bolt end
Lower crankcase sealing bolt (18 mm)	2	18	29 (3.0, 21)	Apply locking agent to the threads. Coating width: 5 ± 1 mm (0.2 ± 0.04 in) except 2 ± 1 mm (0.1 ± 0.04 in) from bolt end
Lower crankcase sealing bolt (22 mm)	1	22	30 (3.1, 22)	Apply locking agent to the threads. Coating width: 4.5 ± 1 mm (0.2 ± 0.04 in) except 2 ± 1 mm (0.1 ± 0.04 in) from bolt end
Parking brake caliper sub slide pin bolt	1	8	17 (1.7, 13)	
Rear reflector mounting nut	1	5	1.5 (0.2, 1.1)	

*1: Apply locking agent to the threads as shown.

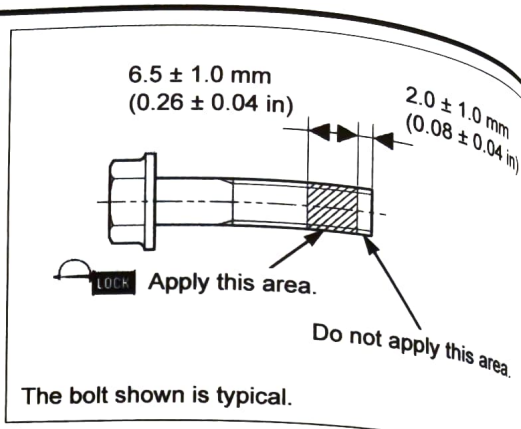

The bolt shown is typical.

*2: Apply locking agent to the threads as shown.

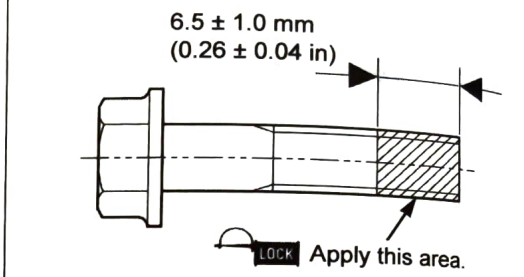

The bolt shown is typical.

*3: Apply locking agent to the threads as shown.

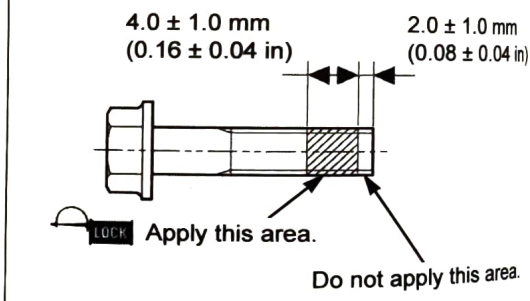

The bolt shown is typical.

LUBRICATION & SEAL POINTS

ENGINE

MATERIAL	LOCATION	REMARKS
Sealant (TB1207B manufactured by ThreeBond or an equivalent)	Crankcase mating surface	See page 14-27
	Alternator cover mating surface	See page 11-4
	Alternator wire grommet	See page 11-6
	Right crankcase cover mating surface	MT type: See page 12-7 DCT type: See page 13-41
	Linear solenoid valve wire grommet	See page 13-46
	EOP switch thread portion (MT type)	
Sealant (TB5211C manufactured by ThreeBond, KE45T manufactured by Shin-Etsu Silicone or an equivalent)	Cylinder head cover packing	See page 10-5
Molybdenum oil solution (a mixture of 1/2 engine oil and 1/2 molybdenum disulfide grease)	Rocker arm sliding area and thrust surface	
	Rocker arm shaft outer surface	
	Camshaft journals, cam lobes, and thrust surface	
	Valve stem sliding area and stem end	
	Starter reduction gear shaft outer surfaces	
	Clutch outer guide entire surface (MT type)	
	Primary driven gear teeth and clutch outer sliding surface (MT type)	
	Judder spring and judder spring seat entire surface (MT type)	
	Primary driven gear teeth, friction springs, and boss sliding area (dual clutch assembly, DCT type)	
	Rear balancer washer seating surface	
	Rear balancer thrust spring sliding surface	
	Oil pump driven gear shaft outer surface	
	Oil pump driven gear needle bearing roller surface	
	Each transmission bushing and collar inner/outer surface	
	Each transmission needle bearing inner/outer surface	
	Each transmission spline bushing outer surface	
	M3, M4, C5, C6 gear (shift fork grooves and spline area)	
	Shift fork shaft outer surface	
	Main journal bearing sliding surface	
	Crankshaft thrust surface	
	Crankpin bearing sliding surface	
	Connecting rod small end inner surface	
	Connecting rod bearing sliding surface	
	Piston pin outer surface	
Engine oil	Valve adjusting screw threads	
	Oil strainer seal ring entire surface	
	Starter one-way clutch sliding surface	
	Clutch friction discs entire surface (MT type)	
	Dual clutch assembly O-ring entire surface (DCT type)	
	Piston pin hole inner surface	
	Piston sliding surface	
	Piston ring groove	
	Piston ring entire surface	
	Each bearing rolling area and contact surface	
	Each gear teeth and rotating surface	
	Each O-ring entire surface (except water seal)	
	Other rotating area and sliding surface	
Lithium based multi-purpose grease NLGI #2 or equivalent	Each oil seal lips	

MATERIAL	LOCATION	REMARKS
Locking agent	Crank pulser plate bolt threads	Coating width: (*1) See page 1-11
	Cam chain guide plate bolt threads	Coating width: (*1) See page 1-11
	Crank pulser plate bolt threads	Coating width: (*3) See page 1-11
UNIREX N3 manufactured by ExxonMobil or equivalent	Shift reduction gear teeth and journal (DCT type)	2 – 4 g (0.07 – 0.14 oz)

FRAME

MATERIAL	LOCATION	REMARKS
Urea based multi-purpose extreme pressure grease NLGI #2 (EXCELITE EP2 manufactured by KYODO YUSHI CO., LTD. or equivalent)	Steering head bearing rolling contact surface	3 – 5 g (0.1 – 0.2 oz)
	Steering head dust seal lips	
Lithium based multi-purpose grease NLGI #2 or equivalent	Seat catch hook sliding area	
	Gearshift pedal pivot sliding area (grease groove) (MT type)	
	Wheel dust seal lips	
	Rear wheel hub O-ring (driven flange side)	
	Rear brake pedal pivot sliding surface	
	Main step pivot pin sliding surface	
	Pillion step pivot pin (CM model)	
	Parking brake stopper stay teeth and lock lever pivot sliding surface (DCT type)	
	Parking brake lever pivot sliding surface (DCT type)	
	Clutch lever pivot sliding area (MT type)	
	Throttle grip pipe-to-APS contacting area	See page 17-6
Molybdenum disulfide grease (containing more than 3% molybdenum disulfide, NLGI #2 or equivalent)	Sidestand pivot sliding surface	
	Swingarm pivot dust seal lips	
	Swingarm pivot needle bearings	
Honda Bond A or Pro Honda Handgrip Cement (U.S.A. only)	Left handlebar grip rubber matching surface	
ThreeBond 1521 or an equivalent	Rear brake pad retainer mating surface	
Silicone grease	Front brake lever pivot bolts sliding area	0.10 g (0.004 oz) minimum
	Front brake lever-to-master piston contacting area	0.10 g (0.004 oz) minimum
	Rear master cylinder push rod sliding area	0.10 g (0.004 oz) minimum
	Rear master cylinder push rod boot fitting area	0.10 g (0.004 oz) minimum
	Rear brake pad pin stopper ring	
	Brake caliper dust seals	
	Rear brake caliper sleeve sliding area	0.4 g (0.01 oz) minimum
	Rear brake caliper pin bolt sliding surface	0.4 g (0.01 oz) minimum
	Parking brake shaft threads (DCT type)	0.4 g (0.01 oz) minimum
	Parking brake push rod rolling surface (DCT type)	0.4 g (0.01 oz) minimum
	Parking brake piston sliding surface (DCT type)	0.4 g (0.01 oz) minimum
	Parking brake shaft boot lips (DCT type)	0.4 g (0.01 oz) minimum
	Parking brake caliper pin boots inside (DCT type)	0.4 g (0.01 oz) minimum
	Parking brake caliper bracket pin boot inside (DCT type)	0.4 g (0.01 oz) minimum
Honda DOT 4 brake fluid	Brake master piston and cups	
	Brake caliper piston	
	Brake caliper piston seals	
	Rear master cylinder reservoir hose joint O-ring	
Fork fluid	Fork cap O-ring	
Honda HP Chain Lube or an equivalent	Drive chain whole surface	
Teflon-containing grease (Liquid O-ring #400 or equivalent)	Fork dust seal and oil seal lips	
Locking agent	Driven sprocket stud bolt threads (driven flange side)	
SUNLIGHT No.2	Change pedal pivot	

SPECIAL TOOL LIST

TITLE	TOOL No	TOOL NAME
MAINTENANCE	07708-0030400 (not available in U.S.A.)	Valve adjusting wrench
	07908-3290100 (U.S.A. only)	Tappet adjuster wrench, 3 mm
	07908-3290200 (U.S.A. only)	Tappet lock nut wrench, 8 mm
	07HAA-PJ70101 or 07AAA-PLCA100 (U.S.A. only)	Oil filter wrench
	07HMH-MR10103 or 07HMH-MR1010C (U.S.A. only)	Drive chain tool set
PGM-FI SYSTEM	070MZ-0010300 or 070MZ-001A300 (U.S.A. only)	SCS short connector
	07ZAJ-RDJA110	Test probe
IGNITION SYSTEM	MTP07-0286 (U.S.A. only)	IgnitionMate peak voltage tester
	07HGJ-0020100 (not available in U.S.A.)	Peak voltage adaptor
	07ZAJ-RDJA110	Test probe
FUEL SYSTEM	07406-0040004 or 07406-004000C (U.S.A. only) or 07406-004000B (U.S.A. only)	Fuel pressure gauge
	070MJ-K260100 (not available in U.S.A.)	Pressure gauge attachment set
	07ZAJ-S5A0130 (not available in U.S.A.)	Hose attachment, 6 mm/9 mm
	07ZAJ-S7C0100 (not available in U.S.A.)	Hose attachment, 8 mm/9 mm
	07ZAJ-S7C0200 (not available in U.S.A.)	Attachment joint, 8 mm/9 mm
	07ZAJ-S5A0150 (not available in U.S.A.)	Attachment joint, 6 mm/9 mm
	07AMJ-HW3A100 (U.S.A. only)	Fuel pressure manifold hose
	07AAJ-S6MA300 (U.S.A. only)	Pressure gauge adaptor "C"
	07AAJ-S6MA500 (U.S.A. only)	Pressure gauge adaptor "C"
LUBRICATION SYSTEM	070MJ-0010101 or 07AMJ-001A100 and 07APJ-004A160 fitting (U.S.A. only)	Oil pressure gauge attachment
	07HAA-PJ70101 or 07AAA-PLCA100 (U.S.A. only)	Oil filter wrench
	07506-3000001 or equivalent commercially available	Oil pressure gauge set
	07406-0030000 or equivalent commercially available	Oil pressure gauge attachment
	07936-1660101 or 07936-166010A (U.S.A. only)	Bearing remover shaft set, 12 mm
	07741-0010201 or 07936-371020A (U.S.A. only) or commercially available 3/8" x 16 slide hammer (U.S.A. only)	Remover weight
	07936-3710100	Remover handle
	07746-0041300	Pilot, 16 mm
	07749-0010000	Driver
	07746-0040400	Pilot, 17 mm
CYLINDER HEAD/VALVE/ CAMSHAFT	070MG-0010100 or 07AMG-001A100 (U.S.A. only) or 07AMG-MFJA100 (U.S.A. only)	Tensioner holder B
	07757-0010000	Valve spring compressor
	07742-0010100	Valve guide driver, 5.5 mm
	07984-2000001 or 07984-200000D (U.S.A. only)	Valve guide reamer, 5.5 mm
	07781-0010101 or equivalent commercially available in U.S.A.	Cutter holder, 5.5 mm
	07780-0010500 or equivalent commercially available in U.S.A.	Seat cutter, 40 mm (45° IN)
	07780-0010400 or equivalent commercially available in U.S.A.	Seat cutter, 35 mm (45° EX)
	07780-0012400 or equivalent commercially available in U.S.A.	Flat cutter, 38.5 mm (32° IN)
	07780-0012900 or equivalent commercially available in U.S.A.	Flat cutter, 33 mm (32° EX)
	07780-0014100 or equivalent commercially available in U.S.A.	Interior cutter, 37.5 mm (60° IN)
	07780-0014700 or equivalent commercially available in U.S.A.	Interior cutter, 34 mm (60° EX)
ALTERNATOR/ STARTER CLUTCH	07725-0040001	Flywheel holder
	07733-0020001 or 07933-3000001 (U.S.A. only)	Rotor puller

TITLE	TOOL No	TOOL NAME
CLUTCH/ GEARSHIFT LINKAGE (MT type)	07724-0050002 or equivalent commercially available in U.S.A.	Clutch center holder P.D. 48 – 135
	07749-0010000	Driver
	07946-1870100	Attachment, 28 x 30 mm
	07746-0040400	Pilot, 17 mm
	07QAD-P0A0100	Attachment, 42 mm
	07746-0010300	Attachment, 42 x 47 mm
	07746-0040800	Pilot, 35 mm
	07724-0010100 or 07724-001A100 (U.S.A. only)	Gear holder, 2.5
DUAL CLUTCH TRANSMISSION (DCT type)	07ZAJ-RDJA110	Test probe
	07741-0010201 or 07936-371020A (U.S.A. only) or commercially available 3/8" x 16 slide hammer (U.S.A. only)	Remover weight
	07JAC-PH80200	Bearing remover shaft
	07JAC-PH80100 or 07736-A01000B with 07YAC-001A200 (U.S.A. only)	Adjustable bearing puller, 20 – 40 mm
	07936-3710600	Bearing remover set, 20 mm
	07936-3710100	Remover handle
	07749-0010000	Driver
	07746-0010400	Attachment, 52 x 55 mm
	07746-0040900	Pilot, 40 mm
	07746-0040500	Pilot, 20 mm
	07724-0010100 or 07724-001A100 (U.S.A. only)	Gear holder, 2.5
CRANKCASE/ TRANSMISSION/ BALANCER	07724-0010100 or 07724-001A100 (U.S.A. only)	Gear holder, 2.5
	07936-ZV10100 or 07936-ZV1A100 (U.S.A. only)	Bearing remover shaft set, 25 mm
	07741-0010201 or 07936-371020A (U.S.A. only) or commercially available 3/8" x 16 slide hammer (U.S.A. only)	Remover weight
	07949-3710001	Driver, 15 x 280L
	07746-0010400	Attachment, 52 x 55 mm
	07746-0040600	Pilot, 25 mm
	07746-0040200	Pilot, 12 mm
	07PPD-YE10100	Seal driver, 14 x 22 mm
FRONT WHEEL/ SUSPENSION/ STEERING	07746-0050600	Bearing remover head, 20 mm
	07746-0050100	Bearing remover shaft
	07749-0010000	Driver
	07945-3330100	Attachment, 41.5 x 46.5 mm
	07746-0010300	Attachment, 42 x 47 mm
	07746-0040500	Pilot, 20 mm
	07947-KA40200	Fork seal driver attachment, 43 mm
	07947-KA50100	Fork seal driver
	07916-3710101	Steering stem socket
	07953-MJ10000 or 07953-MJ1000B (U.S.A. only)	Ball race remover set
	07953-MJ10100 (not available in U.S.A.)	Remover attachment
	07953-MJ10200 (not available in U.S.A.)	Remover shaft
	07946-3710500	Bearing remover
	07946-MB00000	Inner driver, 30 x 36 x 300 L
	07746-0010400	Attachment, 52 x 55 mm
REAR WHEEL/ SUSPENSION	07946-1870100	Attachment, 28 x 30 mm
	07746-0040500	Pilot, 20 mm
	07746-0050600	Bearing remover head, 20 mm
	07746-0050500	Bearing remover shaft
	07746-0010300	Attachment, 42 x 47 mm
	07946-MJ00201	Attachment, 22 x 28 mm
	07946-6920100	Attachment, 45 x 50 mm
	07LMC-KV30200	Remover attachment, 24 mm
	07936-3710600	Bearing remover set, 20 mm
	07749-0010000	Driver
	07746-0040400	Pilot, 17 mm
	07746-0010100	Attachment, 32 x 35 mm
ANTI-LOCK BRAKE SYSTEM (ABS)	07ZAJ-RDJA110	Test probe
	070MZ-0010300 or 070MZ-001A300 (U.S.A. only)	SCS short connector

TITLE	TOOL No	TOOL NAME
BATTERY/ CHARGING SYSTEM	MDX604P (U.S.A. only)	Motorcycle battery analyzer
	TMNTS53 (U.S.A. only)	Optimate PRO-4 Battery Charger
LIGHTS/ METERS/ SWITCHES	07ZAJ-RDJA110	Test probe
	MTP07-0286 (U.S.A. only)	IgnitionMate peak voltage tester
	07HGJ-0020100 (not available in U.S.A.) with commercially available digital multimeter (impedance 10 MΩ/DCV minimum)	Peak voltage adaptor

CABLE & HARNESS ROUTING

MT type:

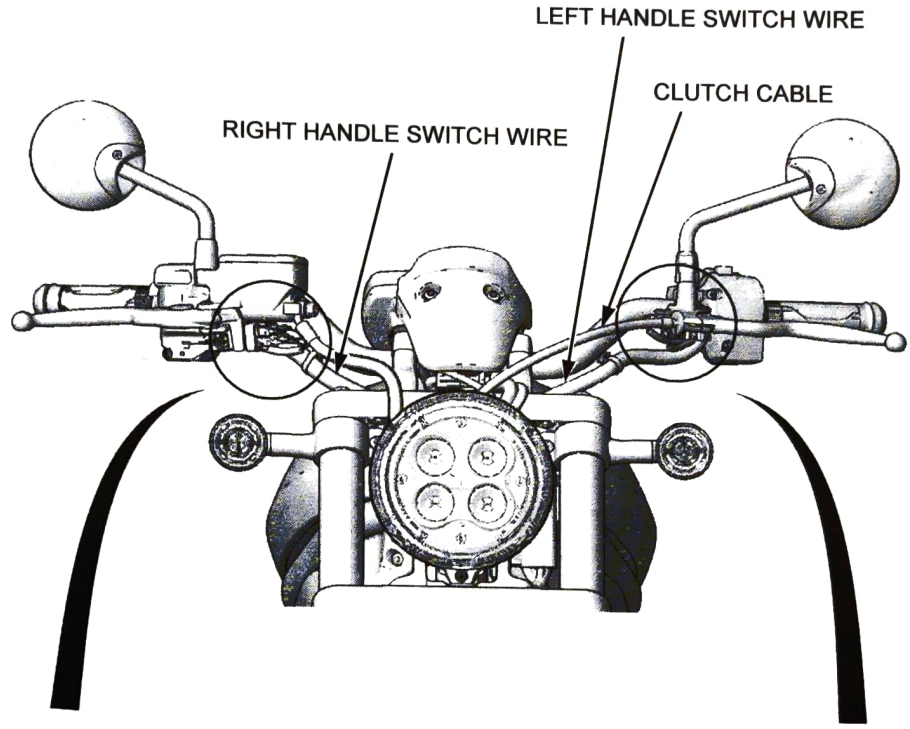

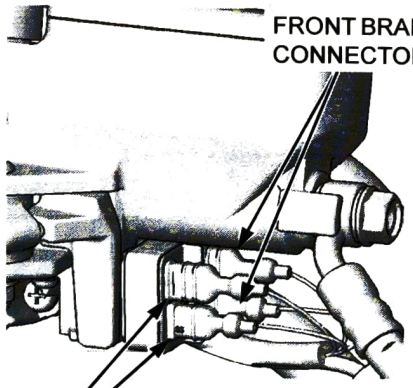

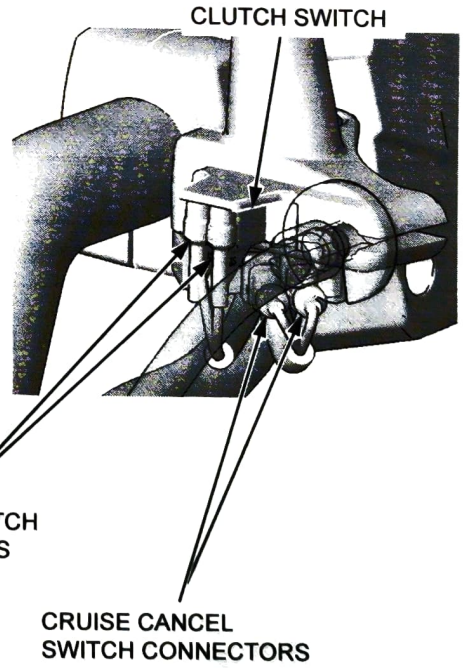

DCT type:

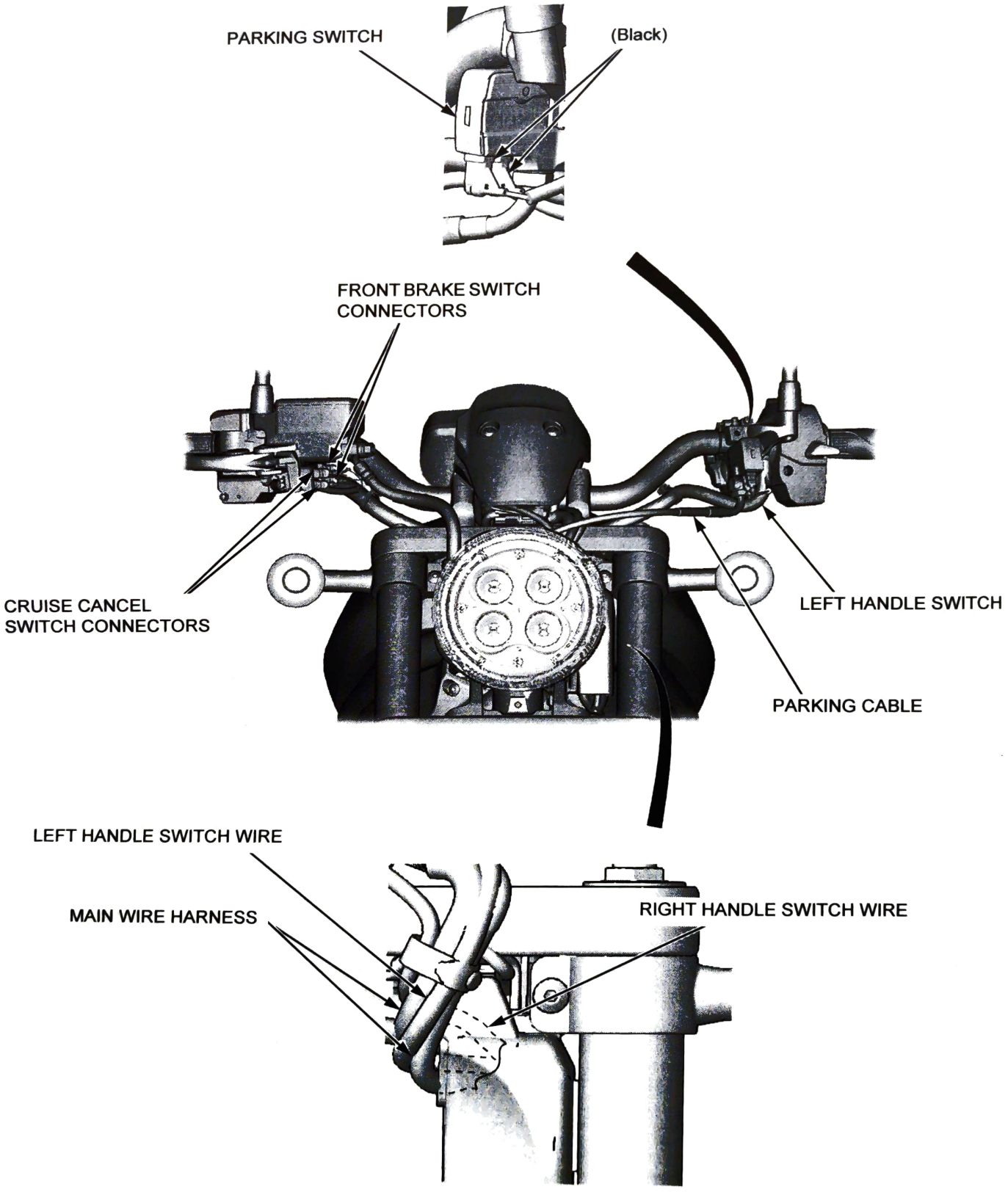
PARKING SWITCH
(Black)
FRONT BRAKE SWITCH CONNECTORS
CRUISE CANCEL SWITCH CONNECTORS
LEFT HANDLE SWITCH
PARKING CABLE
LEFT HANDLE SWITCH WIRE
MAIN WIRE HARNESS
RIGHT HANDLE SWITCH WIRE

DCT type shown:

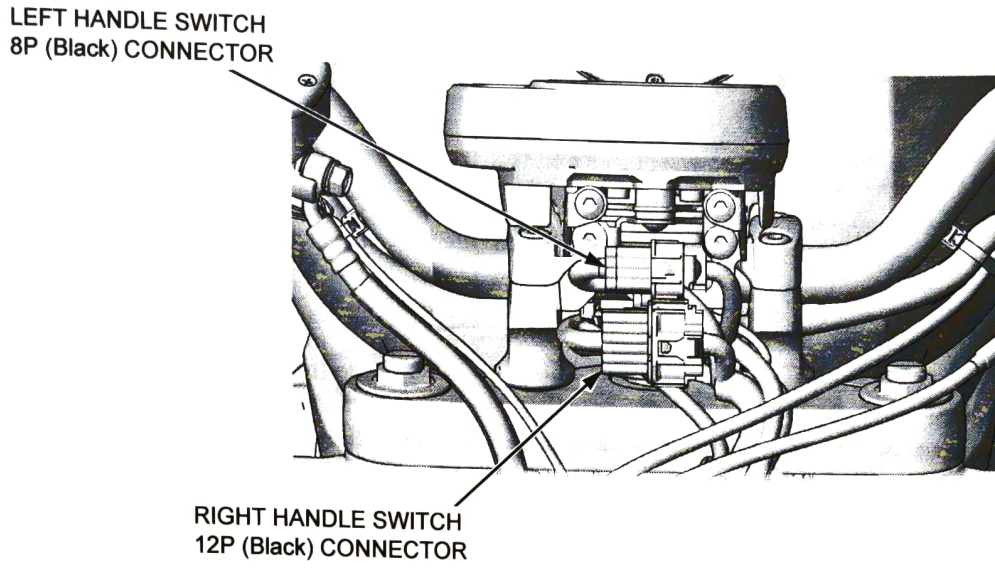

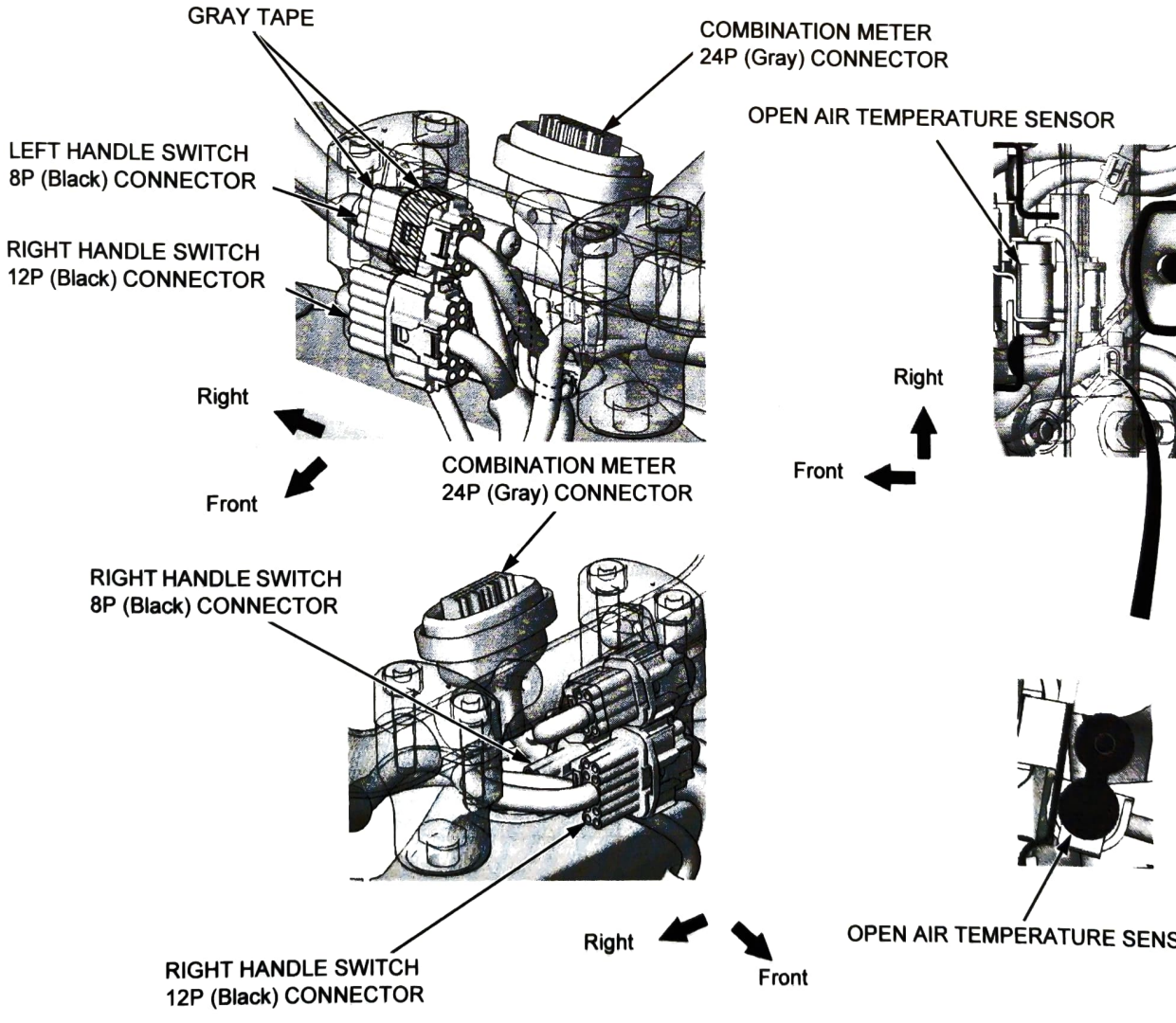

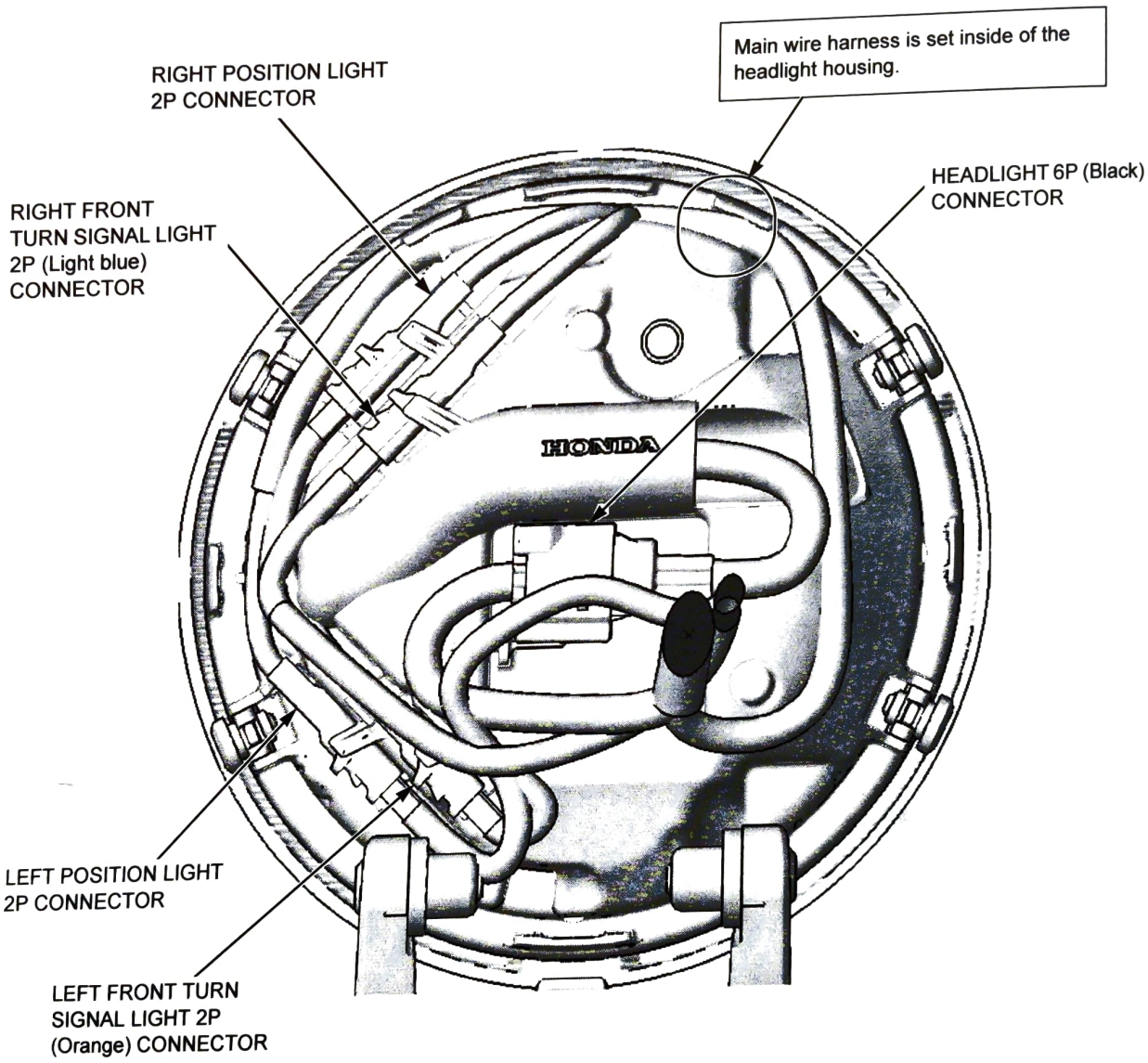
Main wire harness is set inside of the headlight housing.
RIGHT POSITION LIGHT 2P CONNECTOR
HEADLIGHT 6P (Black) CONNECTOR
RIGHT FRONT TURN SIGNAL LIGHT 2P (Light blue) CONNECTOR
HONDA
LEFT POSITION LIGHT 2P CONNECTOR
LEFT FRONT TURN SIGNAL LIGHT 2P (Orange) CONNECTOR

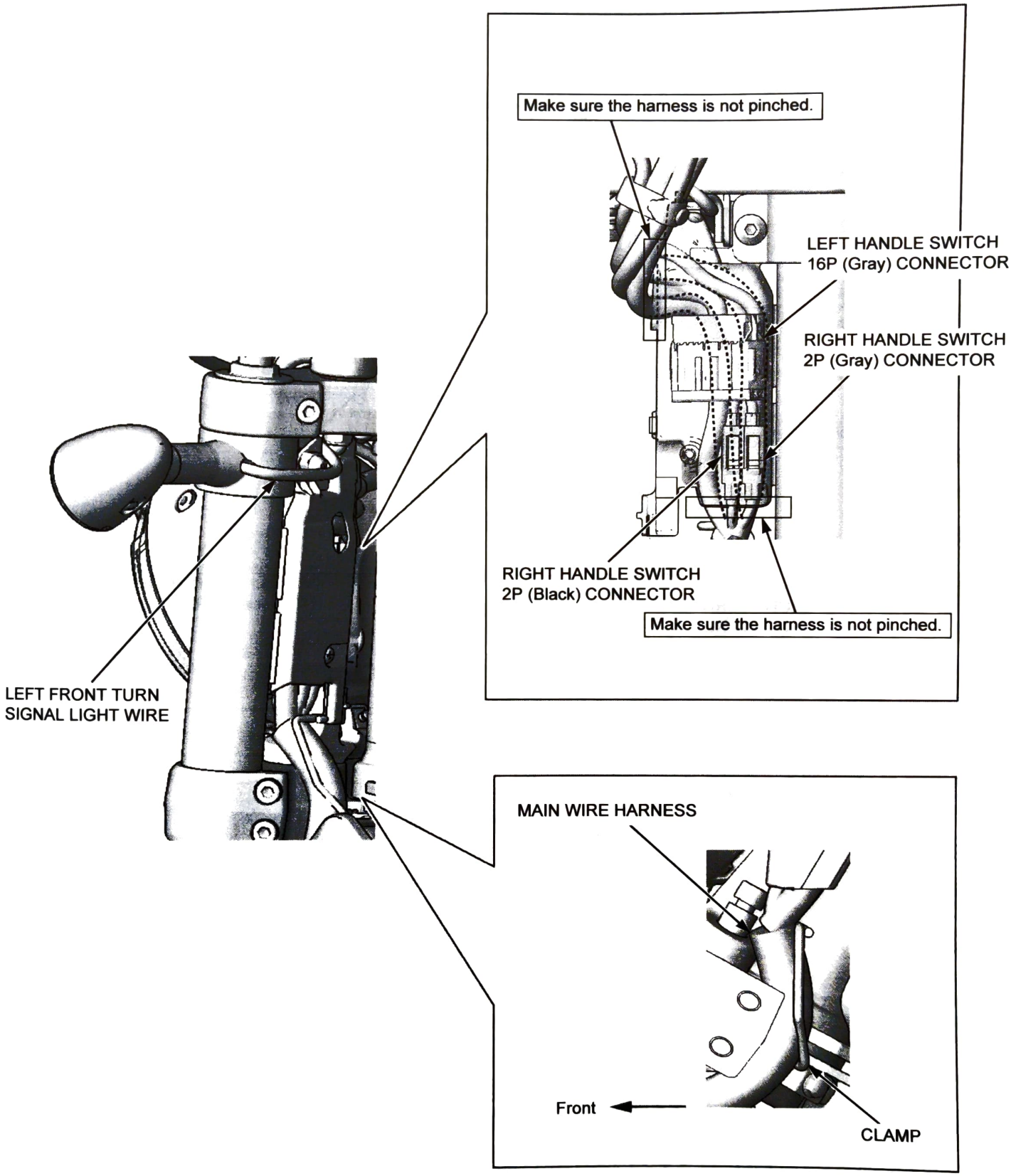
Make sure the harness is not pinched.
LEFT HANDLE SWITCH
16P (Gray) CONNECTOR
RIGHT HANDLE SWITCH
2P (Gray) CONNECTOR
RIGHT HANDLE SWITCH
2P (Black) CONNECTOR
Make sure the harness is not pinched.
LEFT FRONT TURN
SIGNAL LIGHT WIRE
MAIN WIRE HARNESS
Front
CLAMP

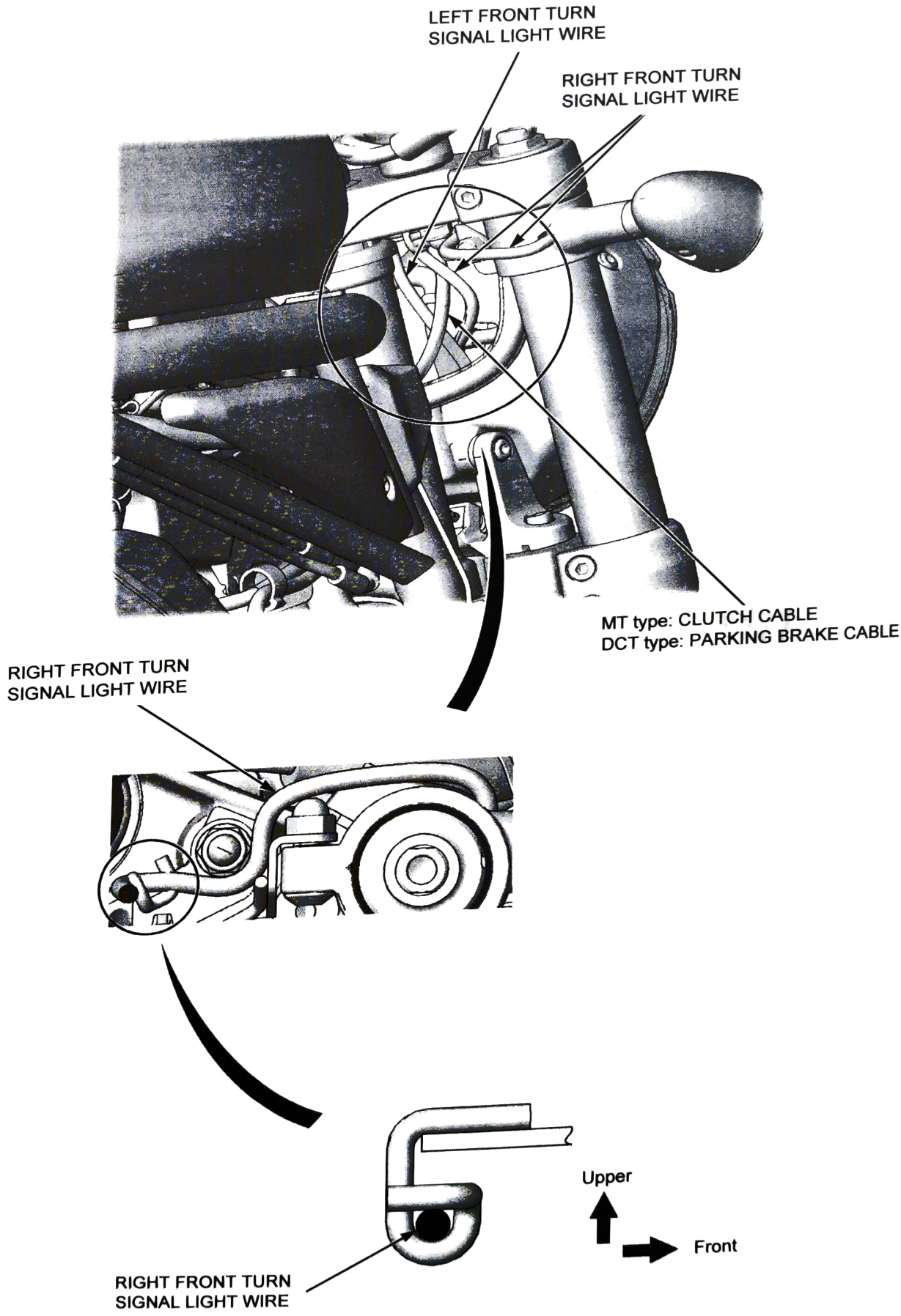
LEFT FRONT TURN
SIGNAL LIGHT WIRE
RIGHT FRONT TURN
SIGNAL LIGHT WIRE
MT type: CLUTCH CABLE
DCT type: PARKING BRAKE CABLE
RIGHT FRONT TURN
SIGNAL LIGHT WIRE
Upper
Front
RIGHT FRONT TURN
SIGNAL LIGHT WIRE

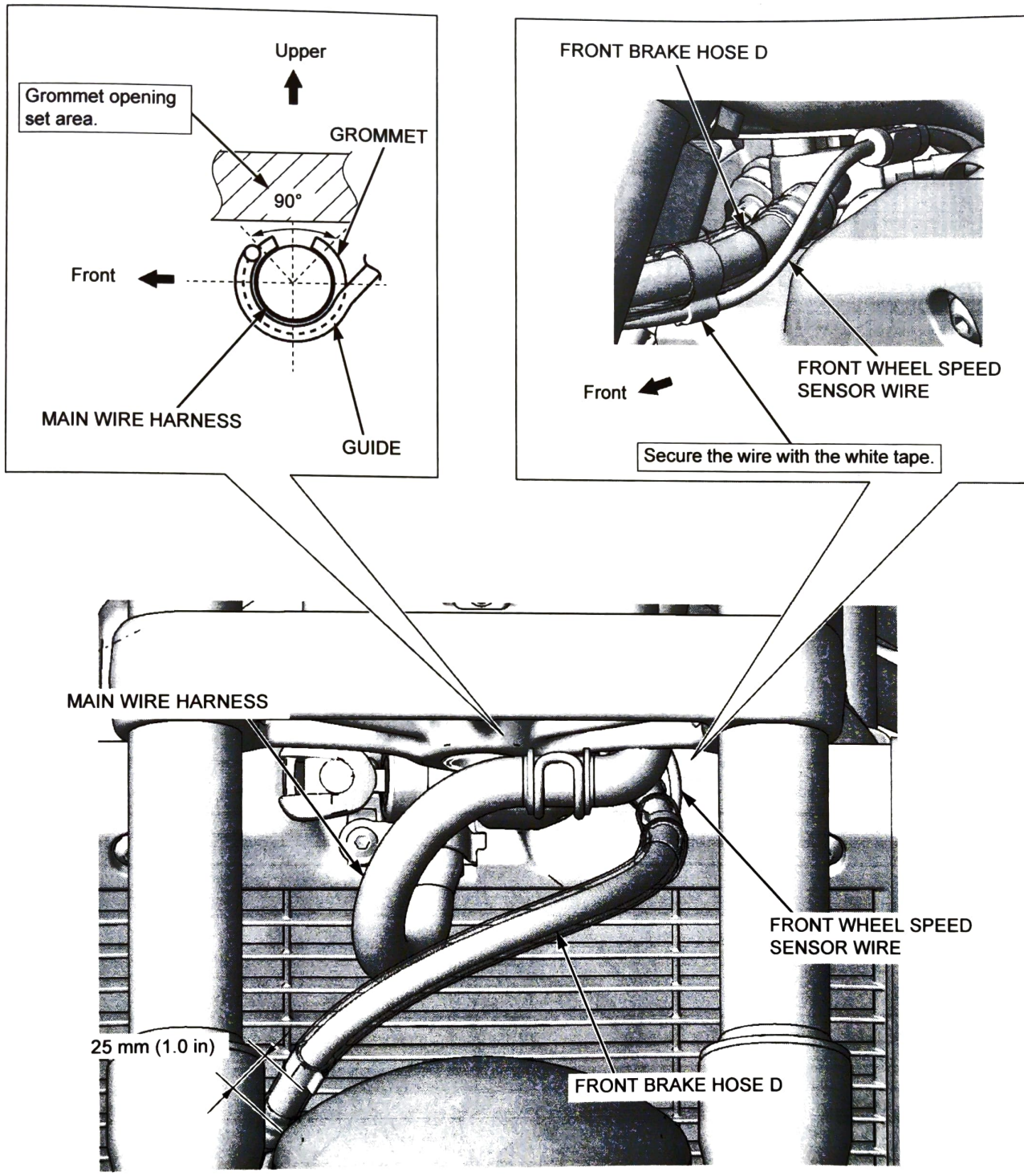
Upper
Grommet opening set area.
GROMMET
90°
Front
MAIN WIRE HARNESS
GUIDE
FRONT BRAKE HOSE D
Front
FRONT WHEEL SPEED SENSOR WIRE
Secure the wire with the white tape.
MAIN WIRE HARNESS
FRONT WHEEL SPEED SENSOR WIRE
25 mm (1.0 in)
FRONT BRAKE HOSE D

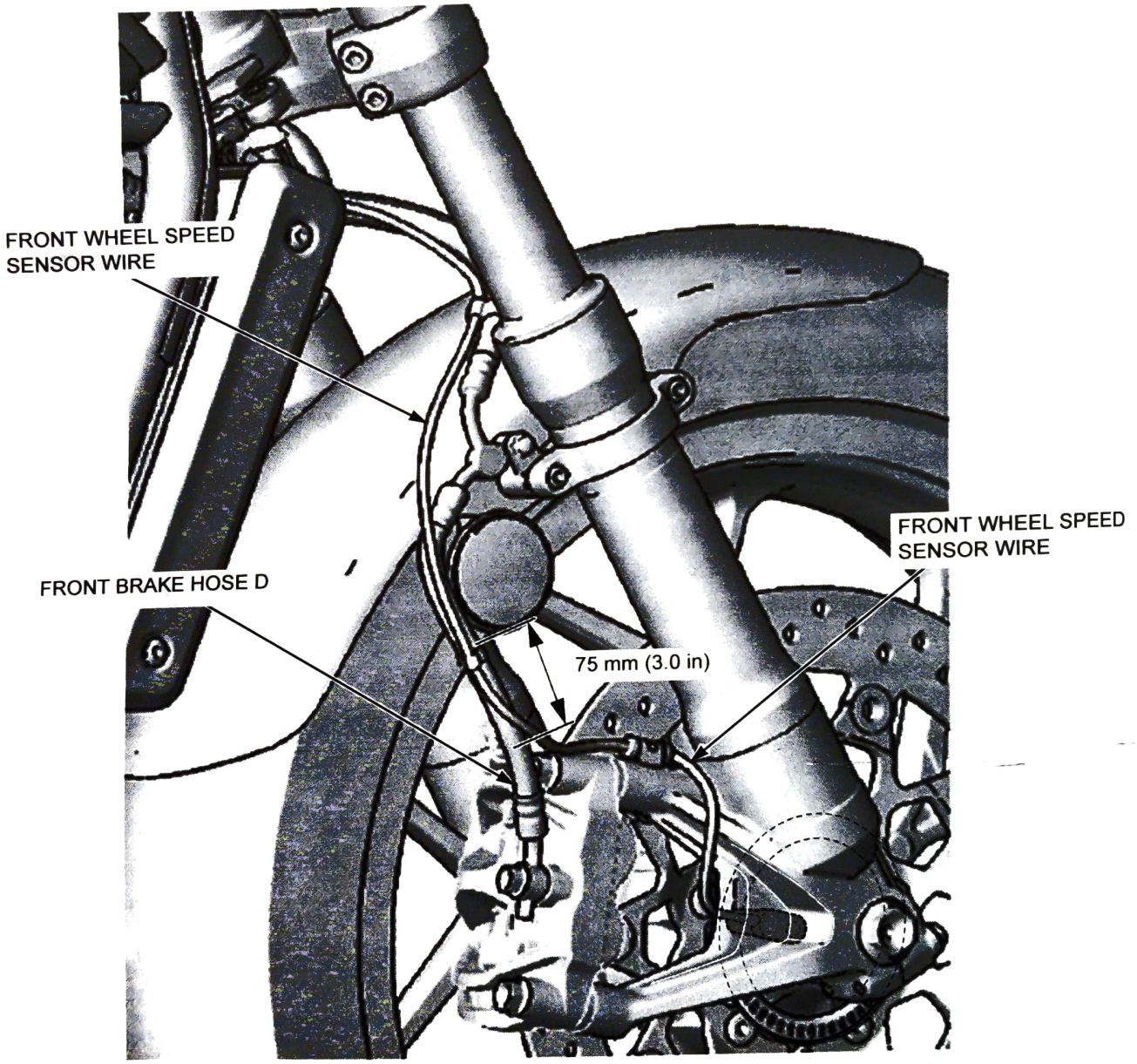
FRONT WHEEL SPEED SENSOR WIRE
FRONT BRAKE HOSE D
75 mm (3.0 in)
FRONT WHEEL SPEED SENSOR WIRE

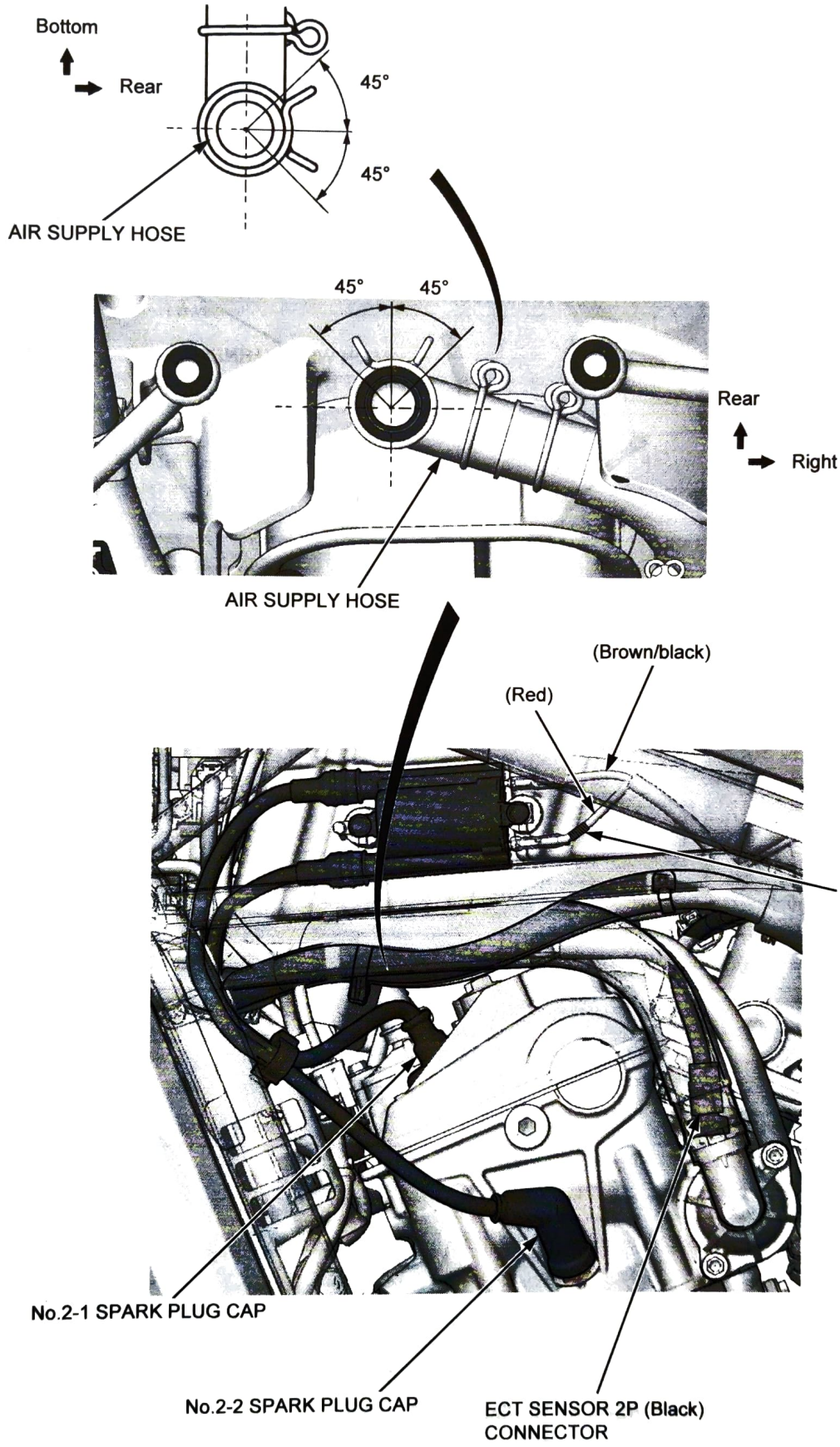
Bottom
Rear
45°
45°
AIR SUPPLY HOSE
45°
45°
Rear
Right
AIR SUPPLY HOSE
(Brown/black)
(Red)
TAPE
No.2-1 SPARK PLUG CAP
No.2-2 SPARK PLUG CAP
ECT SENSOR 2P (Black)
CONNECTOR

DCT type shown:

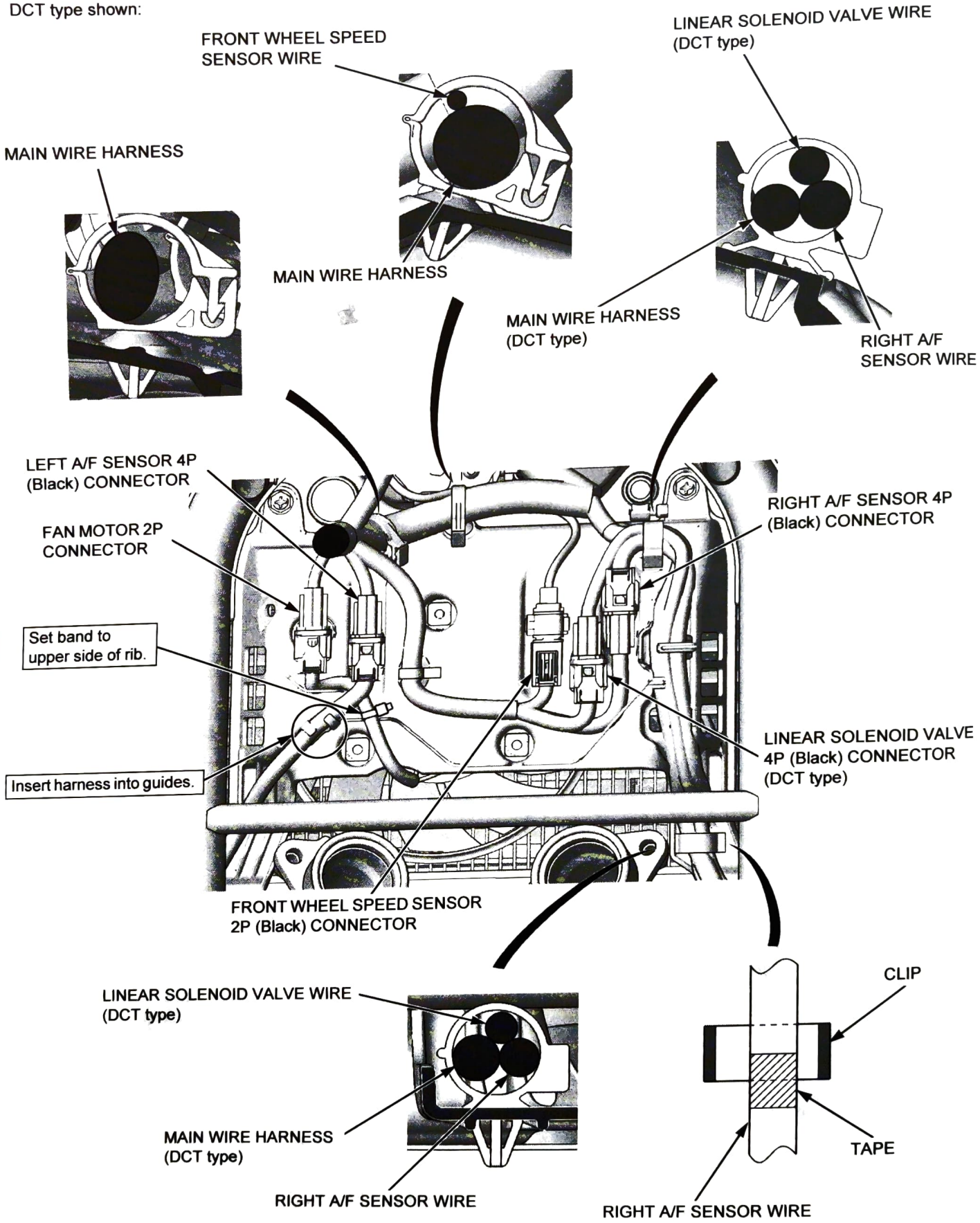

MT type:

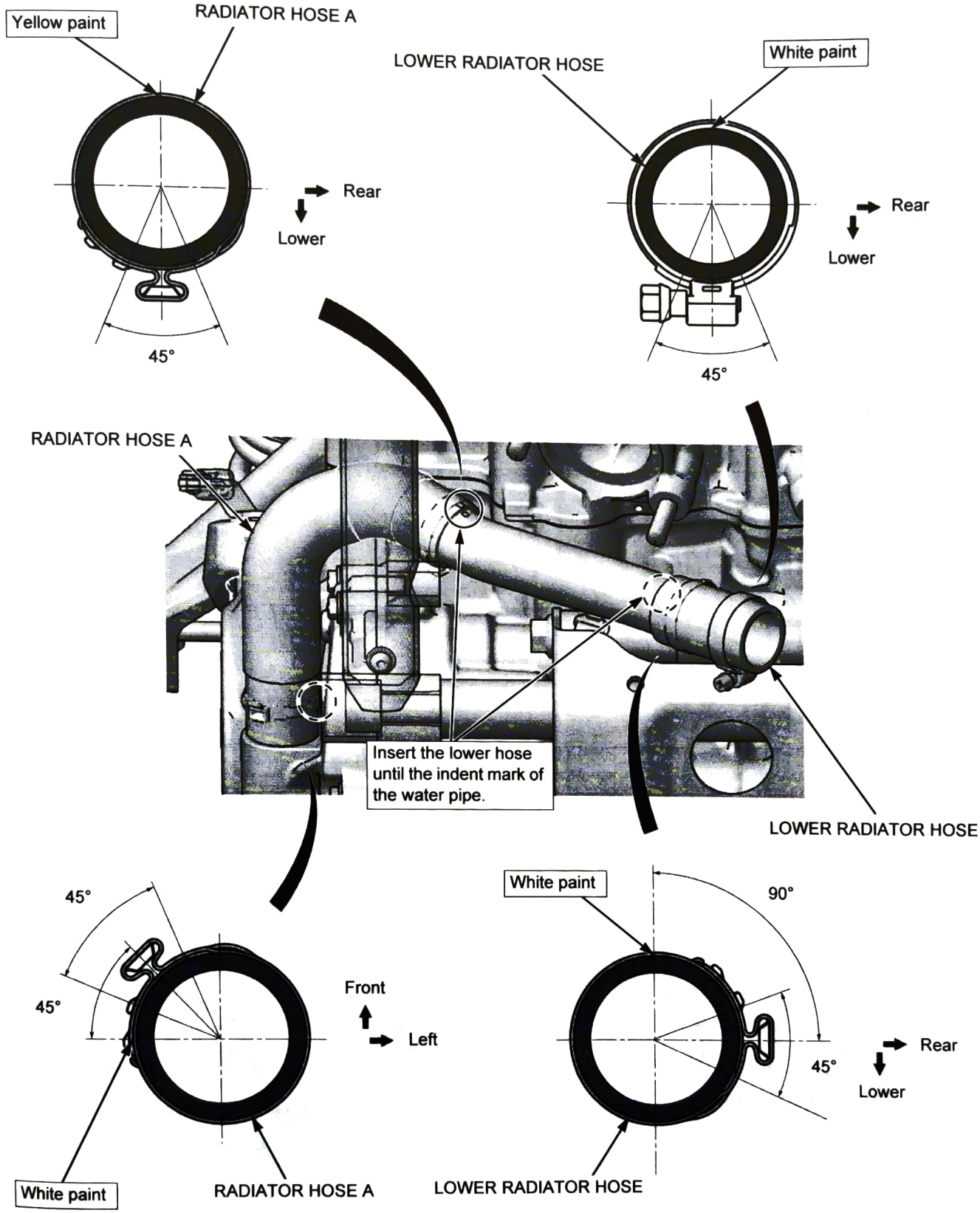
Yellow paint
RADIATOR HOSE A
Rear
Lower
45°
LOWER RADIATOR HOSE
White paint
Rear
Lower
45°
RADIATOR HOSE A
Insert the lower hose until the indent mark of the water pipe.
LOWER RADIATOR HOSE
45°
45°
Front
Left
White paint
RADIATOR HOSE A
White paint
90°
45°
Rear
Lower
LOWER RADIATOR HOSE

DCT type:

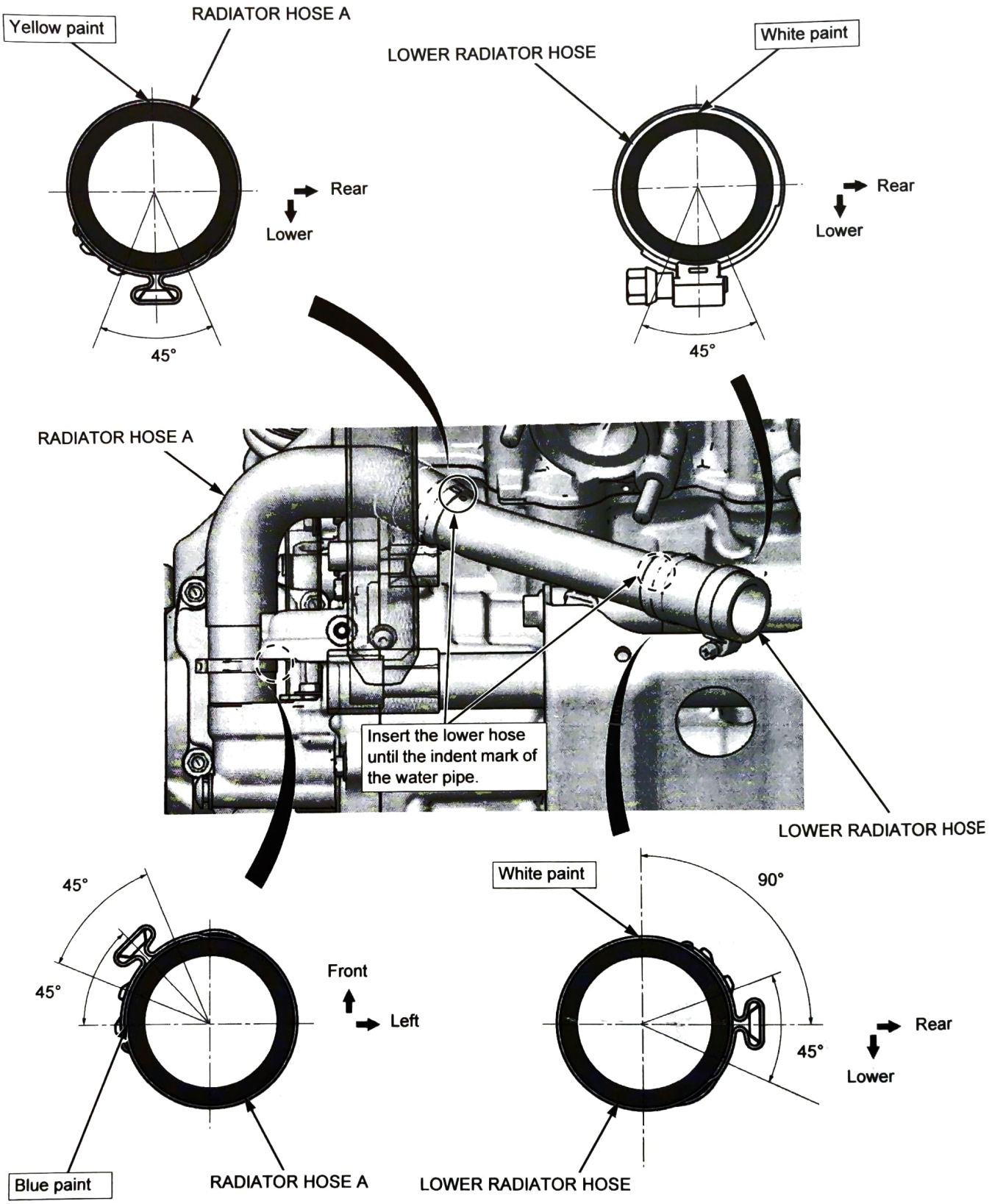
Yellow paint
RADIATOR HOSE A
Rear
Lower
45°
LOWER RADIATOR HOSE
White paint
Rear
Lower
45°
RADIATOR HOSE A
Insert the lower hose until the indent mark of the water pipe.
LOWER RADIATOR HOSE
45°
45°
Front
Left
Blue paint
RADIATOR HOSE A
White paint
90°
45°
Rear
Lower
LOWER RADIATOR HOSE

MT type:

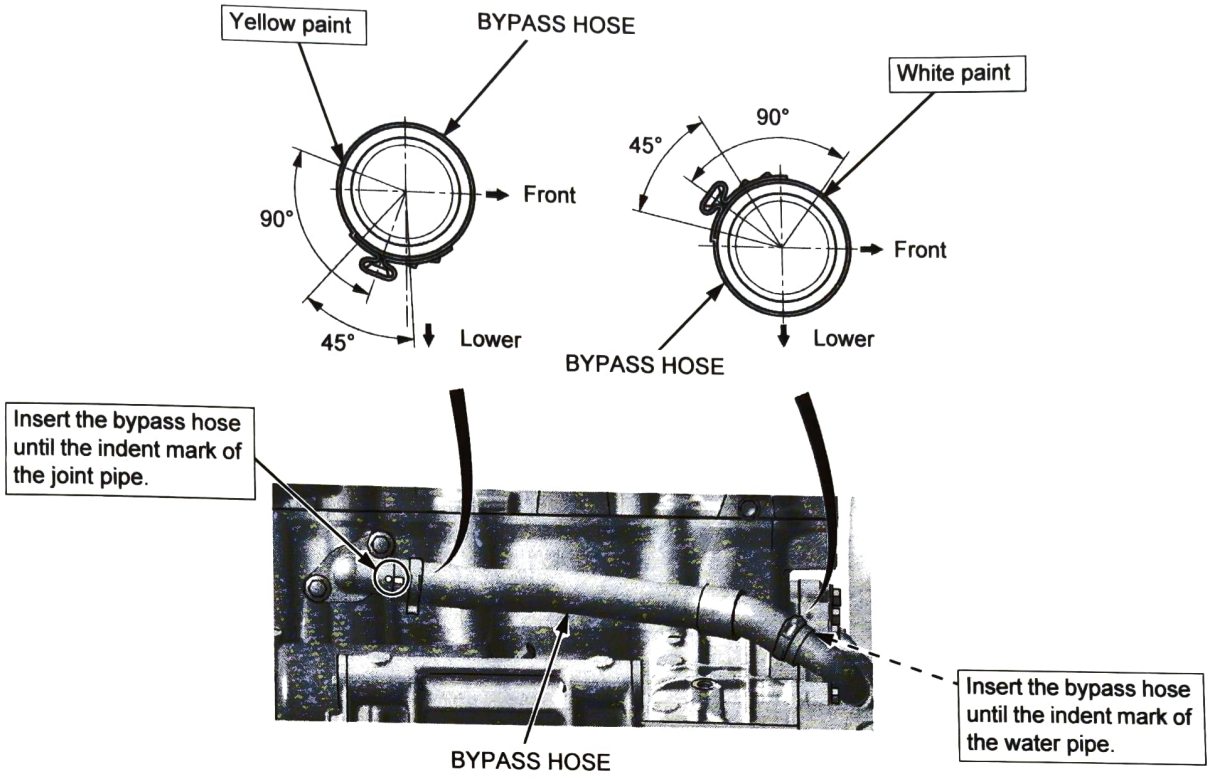

DCT type:

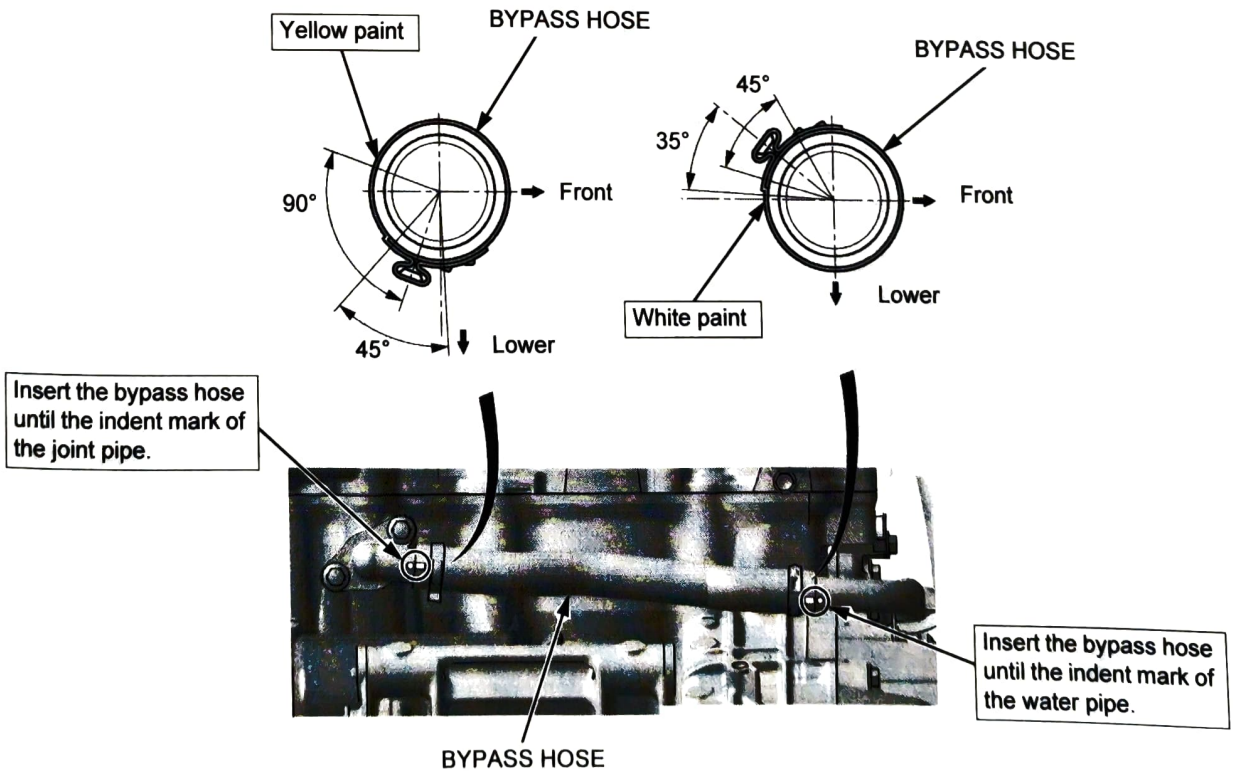

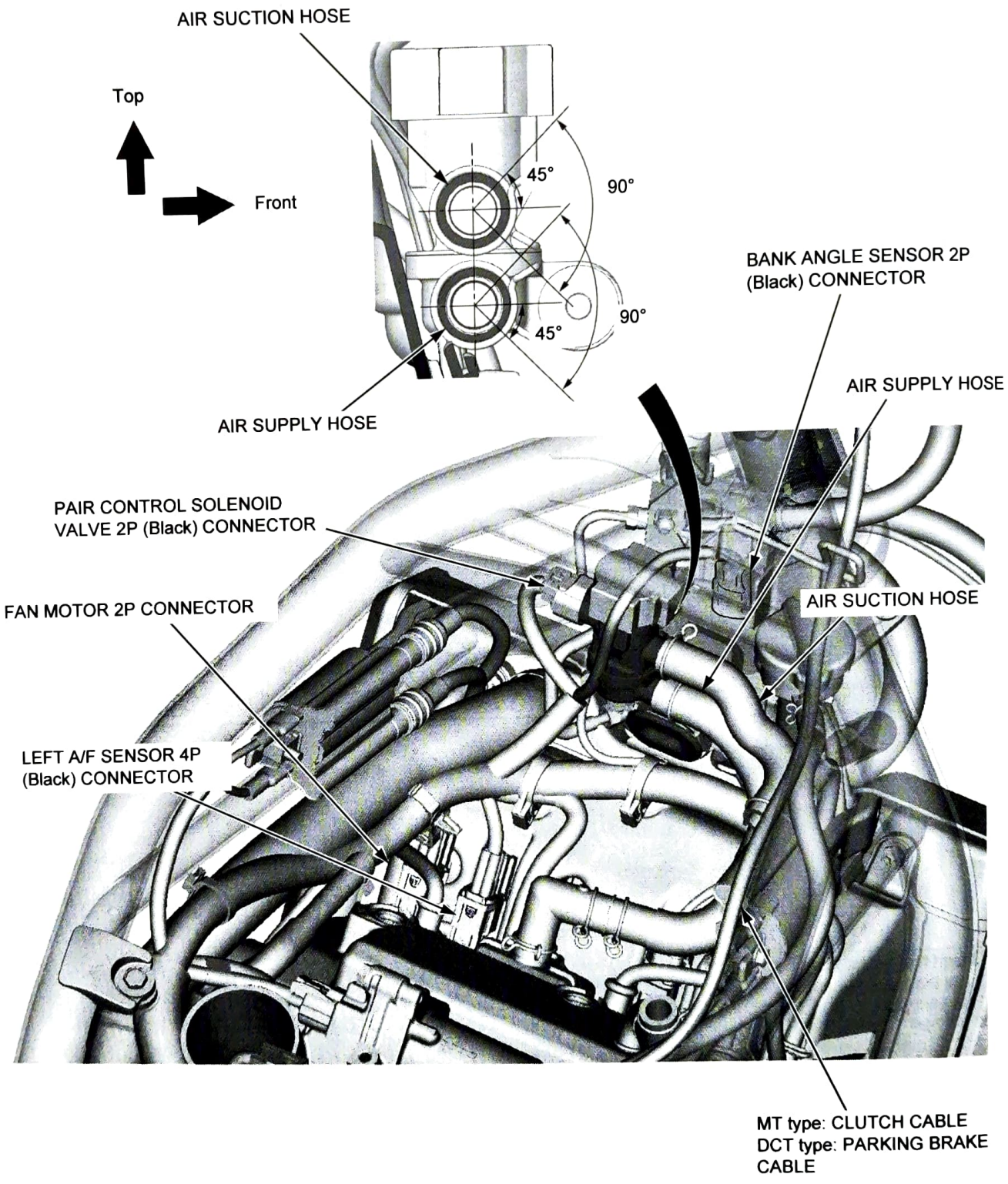
AIR SUCTION HOSE
Top
Front
45°
90°
90°
45°
BANK ANGLE SENSOR 2P (Black) CONNECTOR
AIR SUPPLY HOSE
AIR SUPPLY HOSE
PAIR CONTROL SOLENOID VALVE 2P (Black) CONNECTOR
FAN MOTOR 2P CONNECTOR
AIR SUCTION HOSE
LEFT A/F SENSOR 4P (Black) CONNECTOR
MT type: CLUTCH CABLE
DCT type: PARKING BRAKE CABLE

MT type:

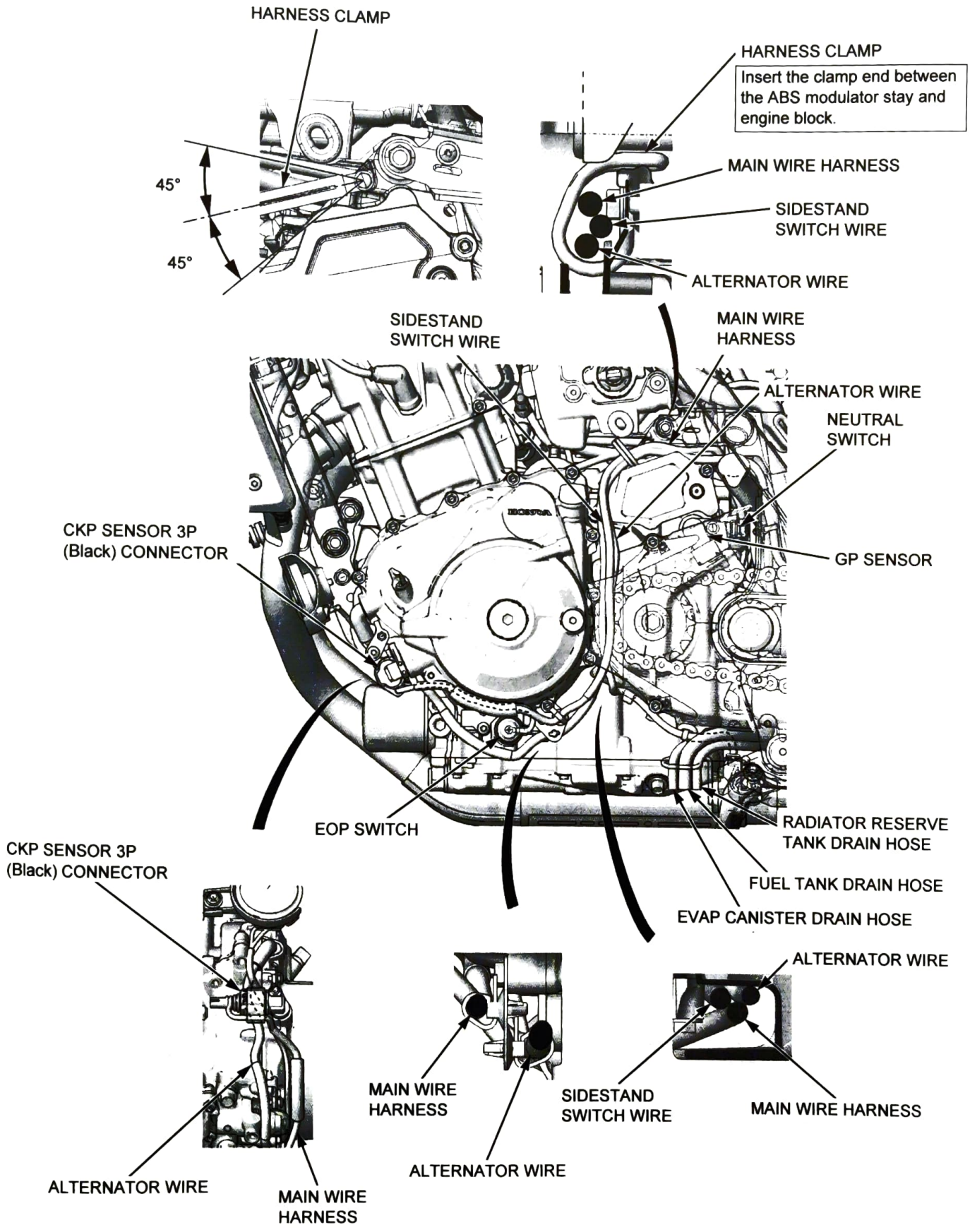
HARNESS CLAMP
45°
45°
HARNESS CLAMP
Insert the clamp end between the ABS modulator stay and engine block.
MAIN WIRE HARNESS
SIDESTAND SWITCH WIRE
ALTERNATOR WIRE
SIDESTAND SWITCH WIRE
MAIN WIRE HARNESS
ALTERNATOR WIRE
NEUTRAL SWITCH
CKP SENSOR 3P (Black) CONNECTOR
GP SENSOR
EOP SWITCH
RADIATOR RESERVE TANK DRAIN HOSE
FUEL TANK DRAIN HOSE
EVAP CANISTER DRAIN HOSE
CKP SENSOR 3P (Black) CONNECTOR
ALTERNATOR WIRE
MAIN WIRE HARNESS
MAIN WIRE HARNESS
ALTERNATOR WIRE
ALTERNATOR WIRE
SIDESTAND SWITCH WIRE
MAIN WIRE HARNESS

DCT type:

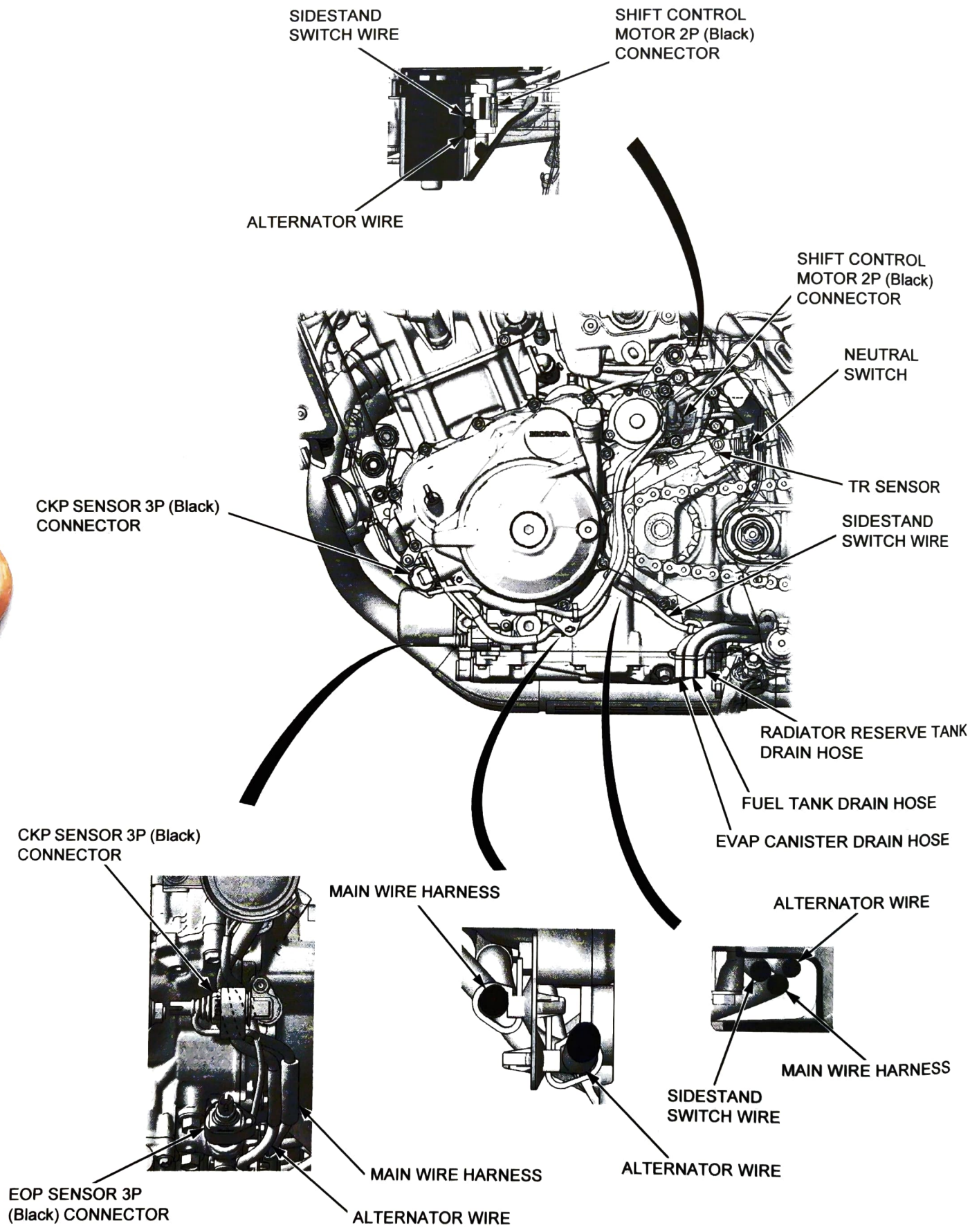
SIDESTAND SWITCH WIRE
SHIFT CONTROL MOTOR 2P (Black) CONNECTOR
ALTERNATOR WIRE
SHIFT CONTROL MOTOR 2P (Black) CONNECTOR
NEUTRAL SWITCH
TR SENSOR
CKP SENSOR 3P (Black) CONNECTOR
SIDESTAND SWITCH WIRE
RADIATOR RESERVE TANK DRAIN HOSE
FUEL TANK DRAIN HOSE
EVAP CANISTER DRAIN HOSE
CKP SENSOR 3P (Black) CONNECTOR
MAIN WIRE HARNESS
ALTERNATOR WIRE
MAIN WIRE HARNESS
SIDESTAND SWITCH WIRE
ALTERNATOR WIRE
MAIN WIRE HARNESS
EOP SENSOR 3P (Black) CONNECTOR
ALTERNATOR WIRE

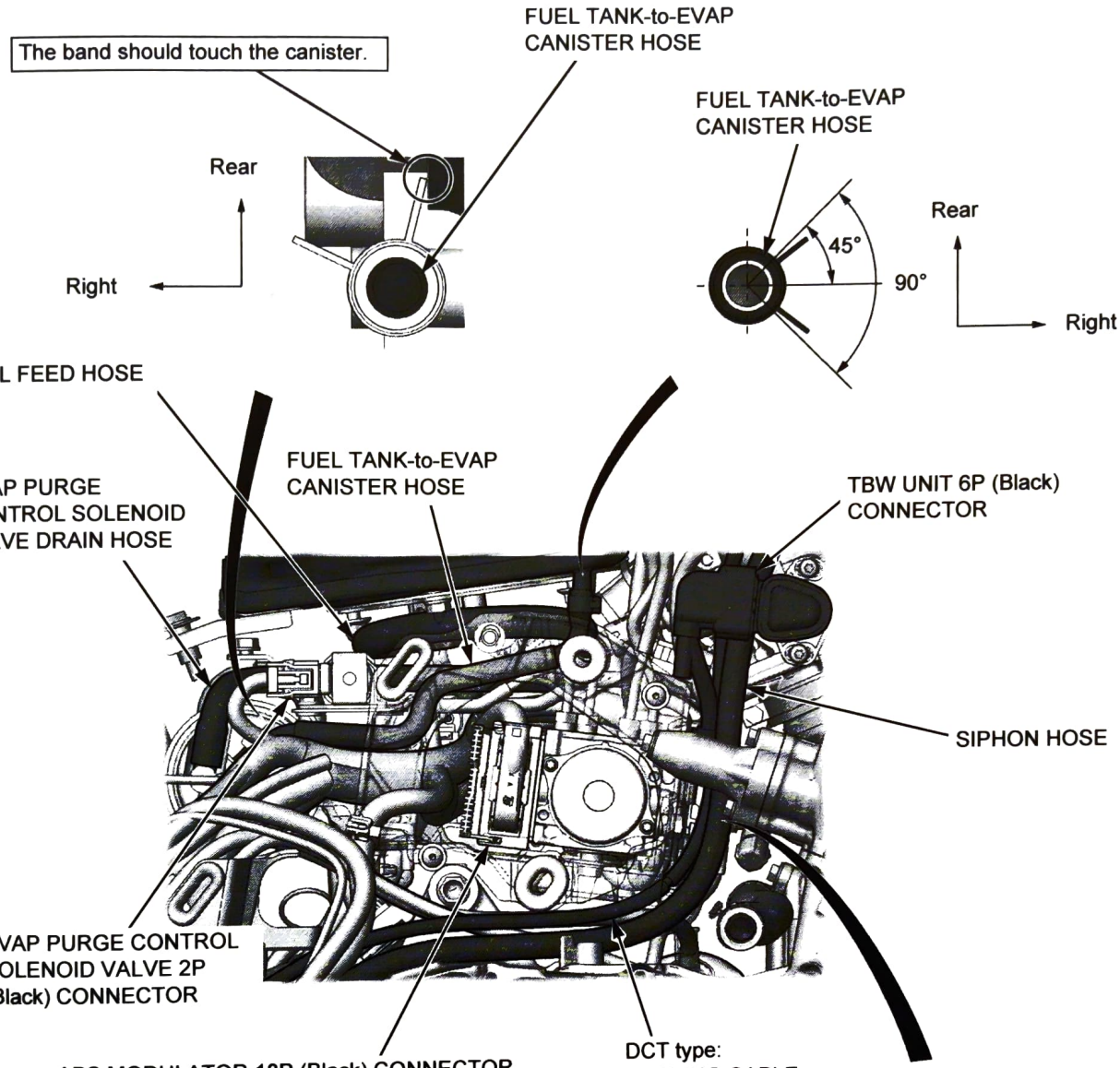
The band should touch the canister.
FUEL TANK-to-EVAP CANISTER HOSE
Rear
Right
FUEL TANK-to-EVAP CANISTER HOSE
45°
90°
Rear
Right
FUEL FEED HOSE
EVAP PURGE CONTROL SOLENOID VALVE DRAIN HOSE
FUEL TANK-to-EVAP CANISTER HOSE
TBW UNIT 6P (Black) CONNECTOR
SIPHON HOSE
EVAP PURGE CONTROL SOLENOID VALVE 2P (Black) CONNECTOR
ABS MODULATOR 18P (Black) CONNECTOR
DCT type: PARKING CABLE

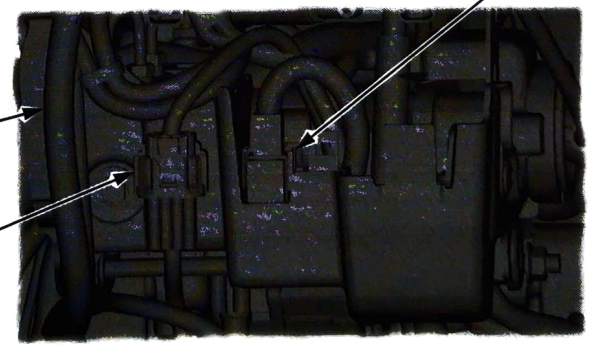
IGNITION SWITCH 2P (Brown) CONNECTOR
SIPHON HOSE
ENGINE SUB HARNESS 8P (Black) CONNECTOR

MT type:

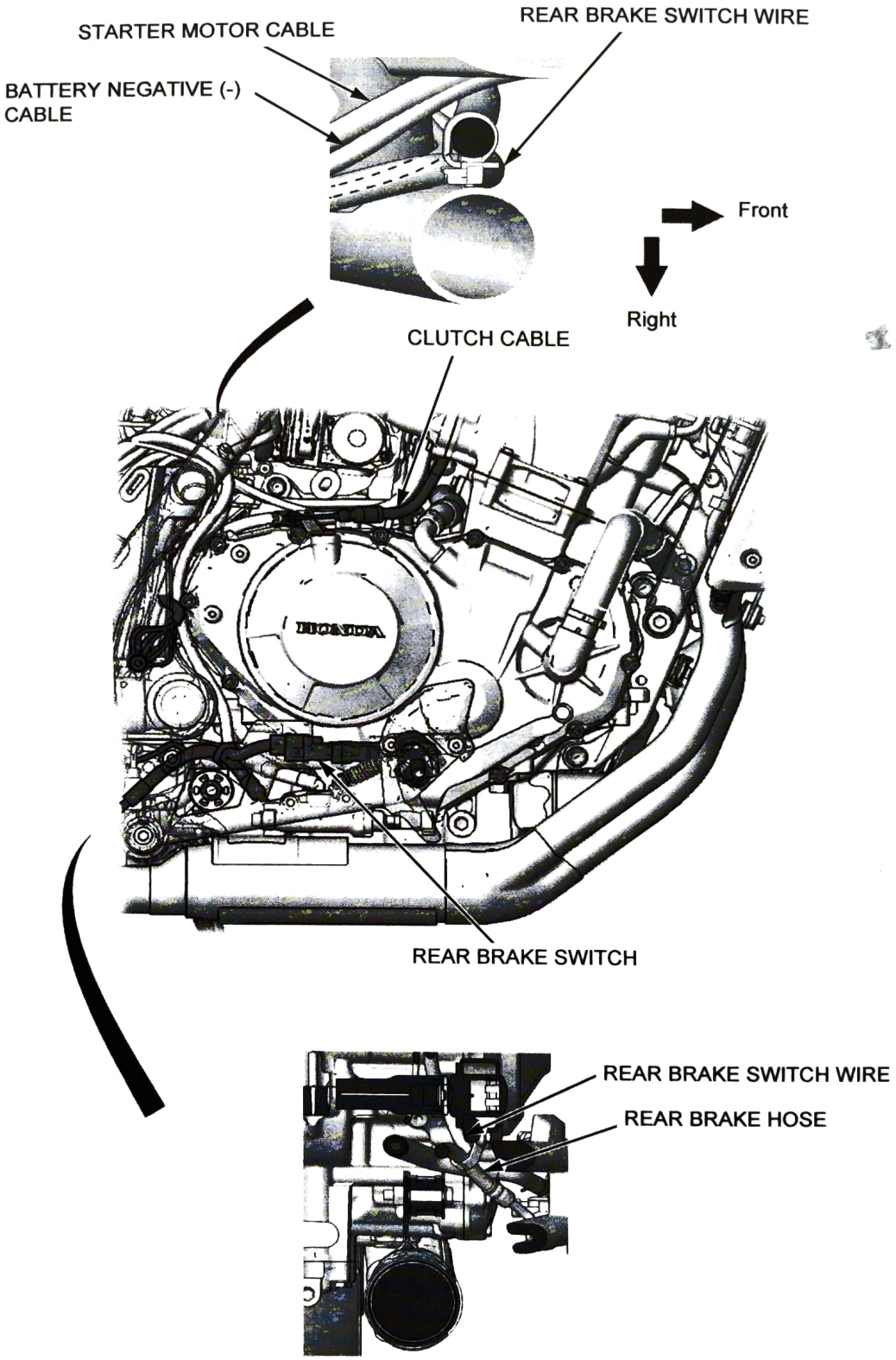
STARTER MOTOR CABLE
REAR BRAKE SWITCH WIRE
BATTERY NEGATIVE (-) CABLE
Front
Right
CLUTCH CABLE
REAR BRAKE SWITCH
REAR BRAKE SWITCH WIRE
REAR BRAKE HOSE

DCT type:

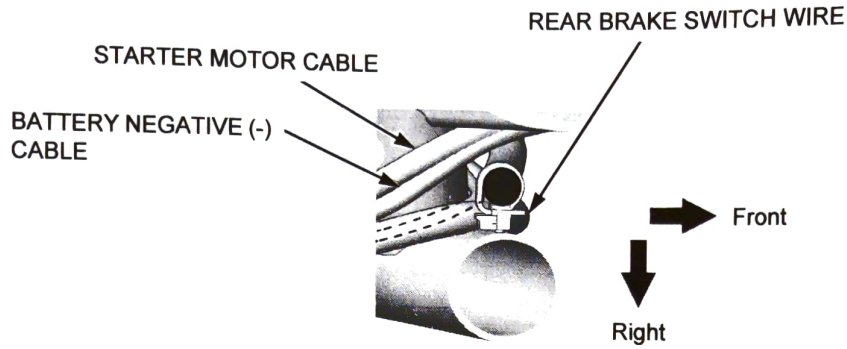
REAR BRAKE SWITCH WIRE
STARTER MOTOR CABLE
BATTERY NEGATIVE (-) CABLE
Front
Right

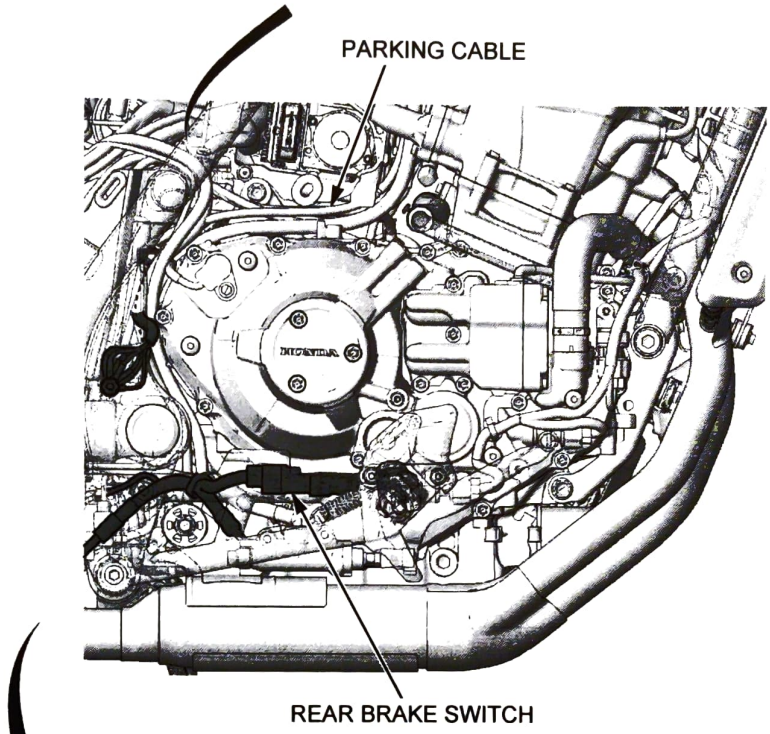
PARKING CABLE
REAR BRAKE SWITCH

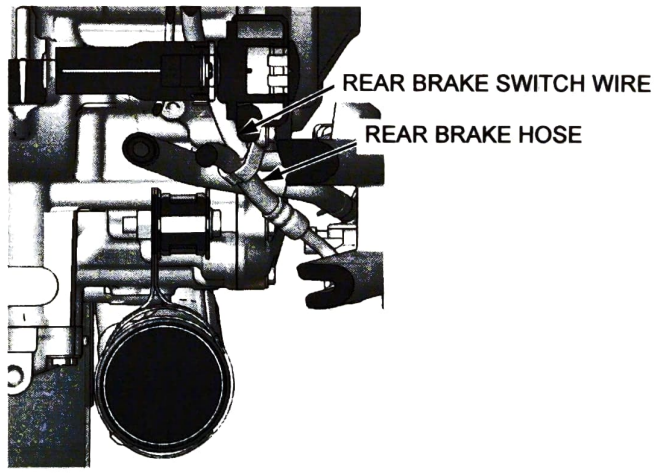
REAR BRAKE SWITCH WIRE
REAR BRAKE HOSE

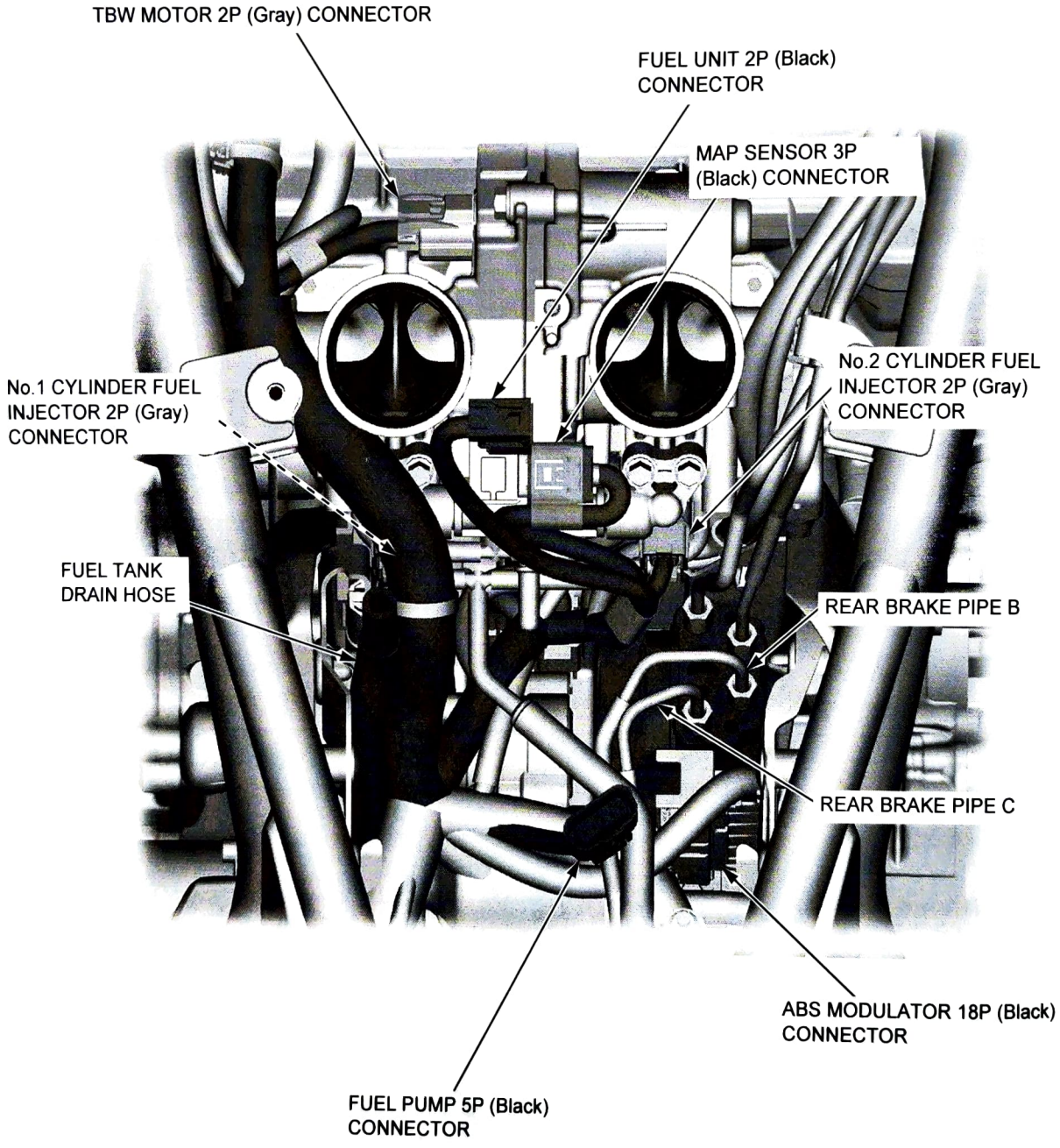
TBW MOTOR 2P (Gray) CONNECTOR
FUEL UNIT 2P (Black) CONNECTOR
MAP SENSOR 3P (Black) CONNECTOR
No.1 CYLINDER FUEL INJECTOR 2P (Gray) CONNECTOR
No.2 CYLINDER FUEL INJECTOR 2P (Gray) CONNECTOR
FUEL TANK DRAIN HOSE
REAR BRAKE PIPE B
REAR BRAKE PIPE C
ABS MODULATOR 18P (Black) CONNECTOR
FUEL PUMP 5P (Black) CONNECTOR

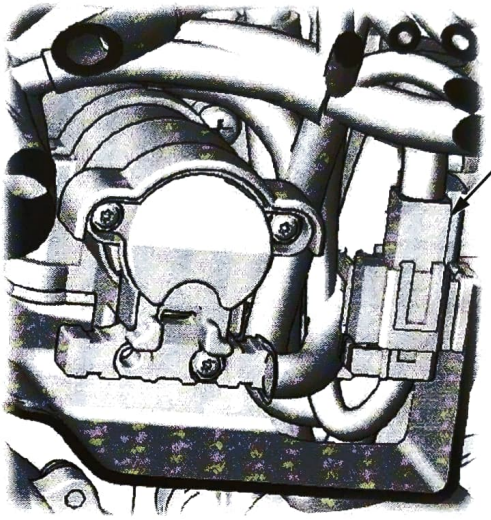
IGNITION SWITCH 2P
(Brown) CONNECTOR

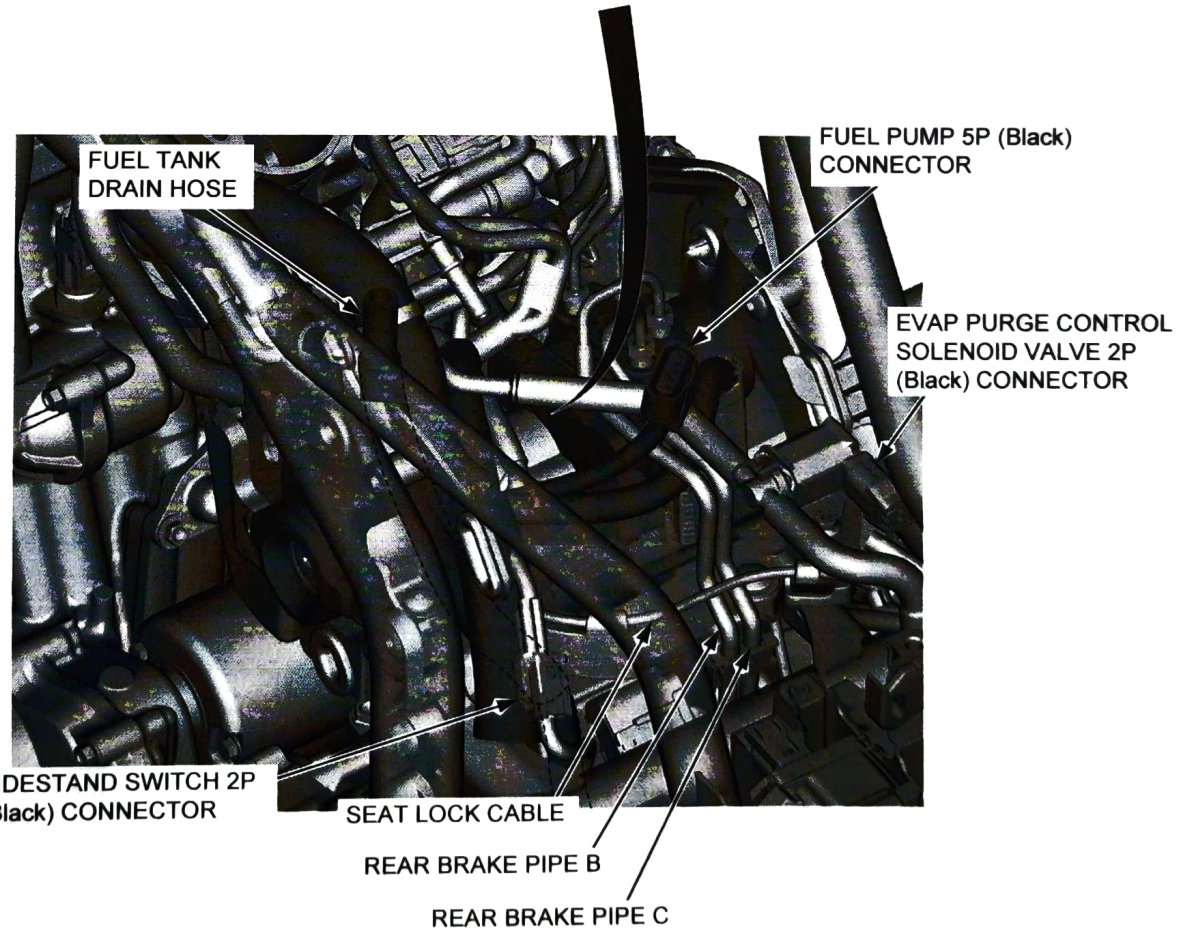
FUEL TANK
DRAIN HOSE
FUEL PUMP 5P (Black)
CONNECTOR
EVAP PURGE CONTROL
SOLENOID VALVE 2P
(Black) CONNECTOR
SIDESTAND SWITCH 2P
(Black) CONNECTOR
SEAT LOCK CABLE
REAR BRAKE PIPE B
REAR BRAKE PIPE C

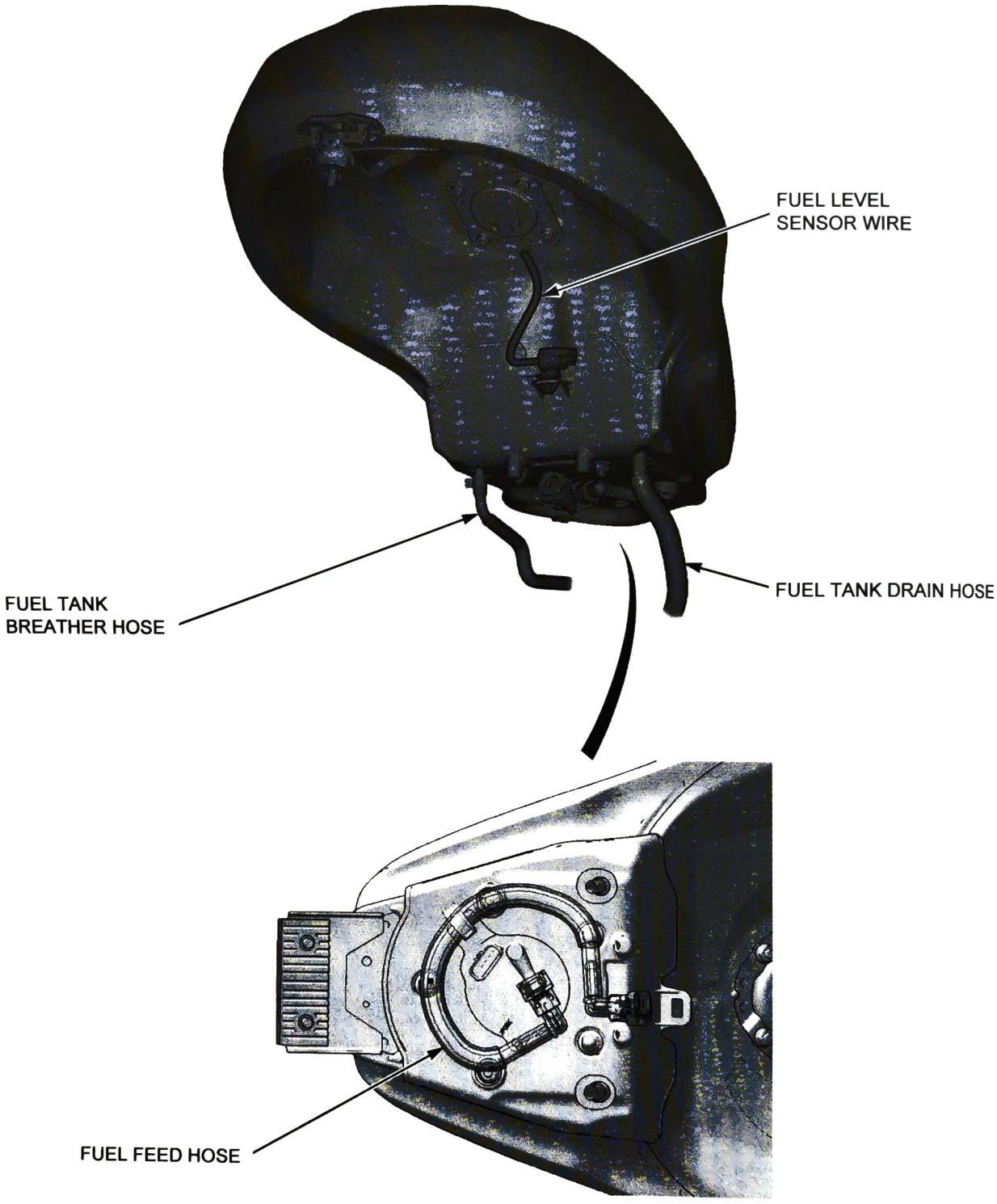
FUEL LEVEL
SENSOR WIRE
FUEL TANK
BREATHER HOSE
FUEL TANK DRAIN HOSE
FUEL FEED HOSE

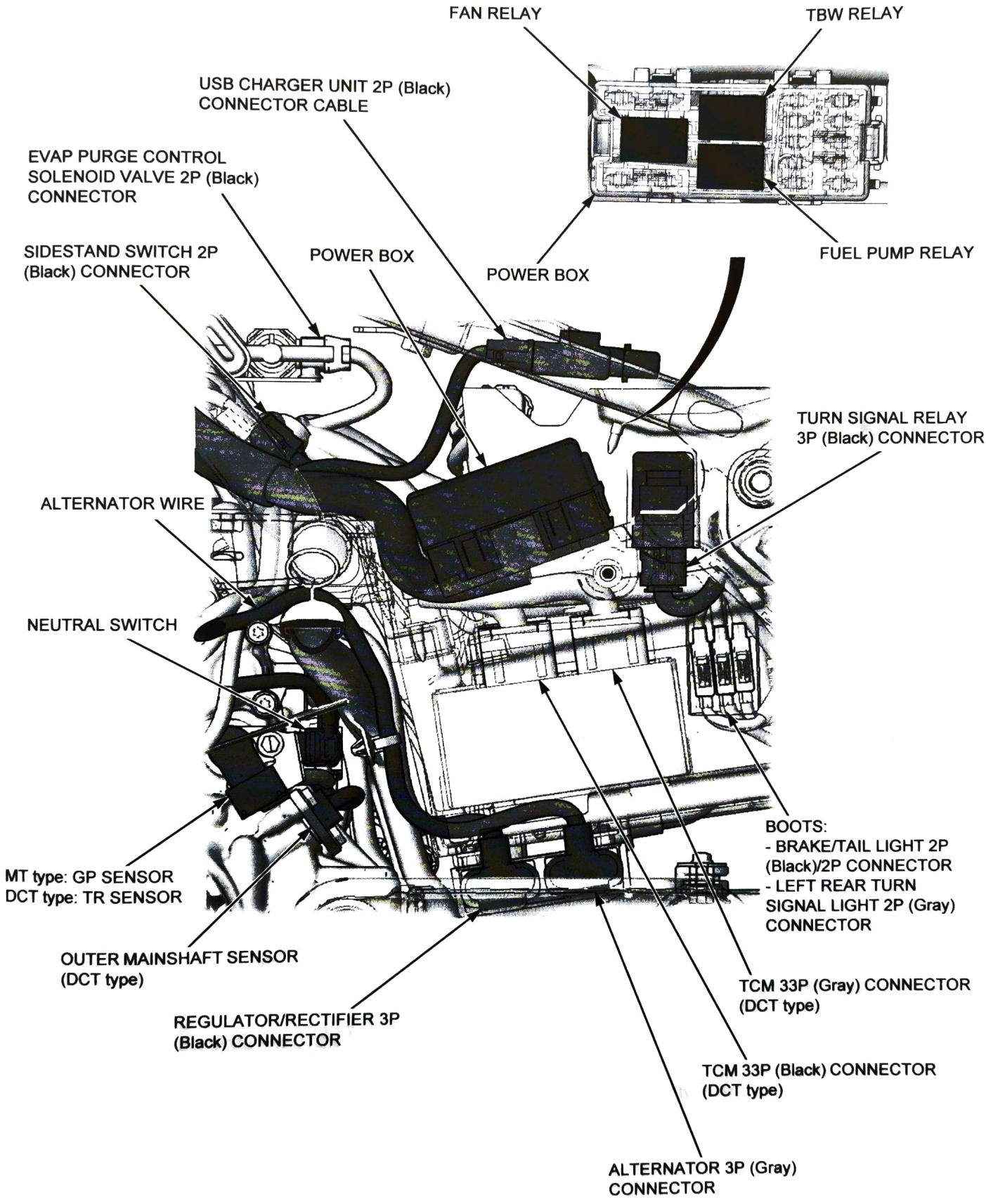
FAN RELAY
TBW RELAY
USB CHARGER UNIT 2P (Black) CONNECTOR CABLE
EVAP PURGE CONTROL SOLENOID VALVE 2P (Black) CONNECTOR
SIDESTAND SWITCH 2P (Black) CONNECTOR
POWER BOX
POWER BOX
FUEL PUMP RELAY
TURN SIGNAL RELAY 3P (Black) CONNECTOR
ALTERNATOR WIRE
NEUTRAL SWITCH
BOOTS:
- BRAKE/TAIL LIGHT 2P (Black)/2P CONNECTOR
- LEFT REAR TURN SIGNAL LIGHT 2P (Gray) CONNECTOR
MT type: GP SENSOR
DCT type: TR SENSOR
OUTER MAINSHAFT SENSOR (DCT type)
TCM 33P (Gray) CONNECTOR (DCT type)
REGULATOR/RECTIFIER 3P (Black) CONNECTOR
TCM 33P (Black) CONNECTOR (DCT type)
ALTERNATOR 3P (Gray) CONNECTOR

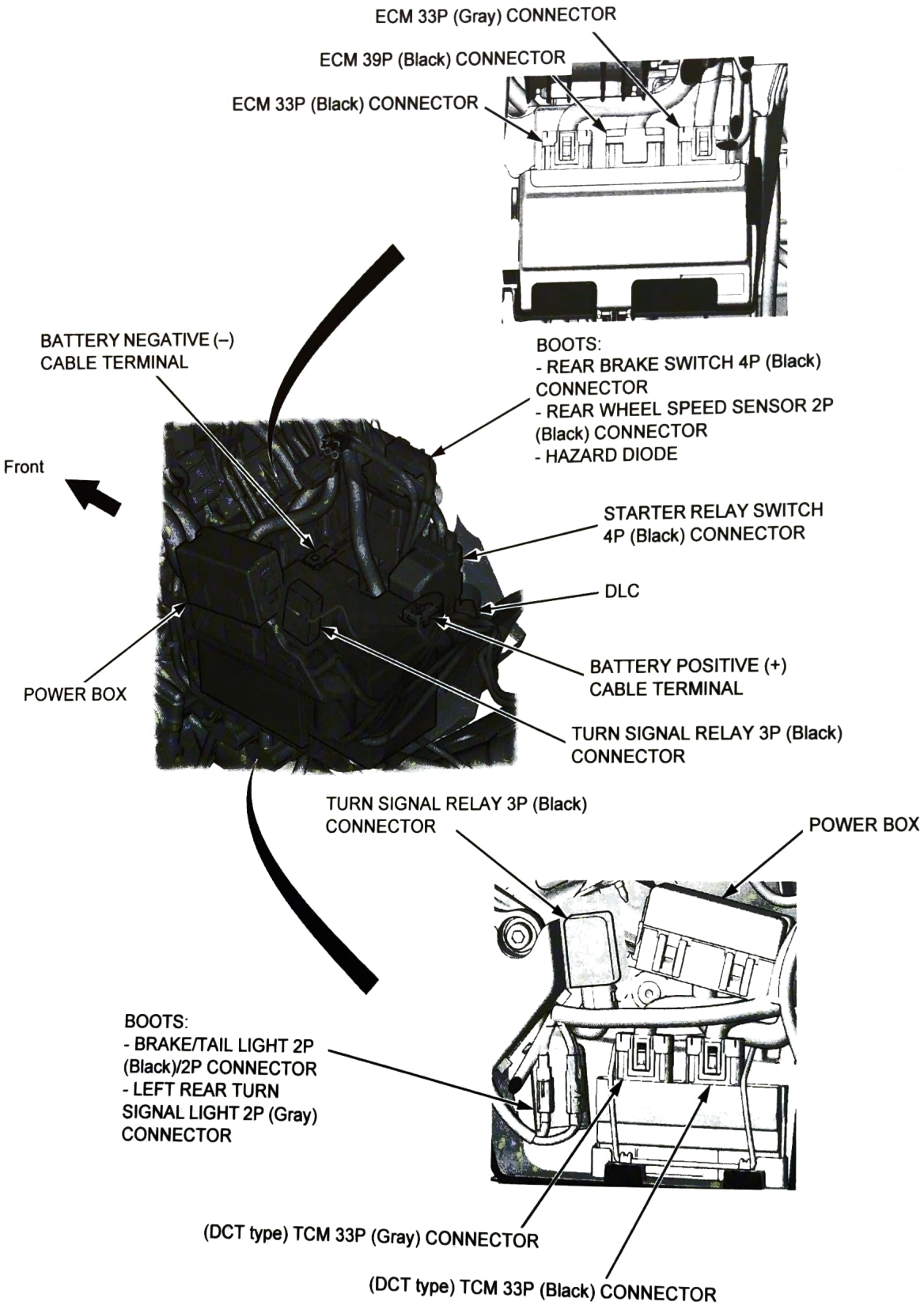
ECM 33P (Gray) CONNECTOR
ECM 39P (Black) CONNECTOR
ECM 33P (Black) CONNECTOR
BATTERY NEGATIVE (–) CABLE TERMINAL
BOOTS:
- REAR BRAKE SWITCH 4P (Black) CONNECTOR
- REAR WHEEL SPEED SENSOR 2P (Black) CONNECTOR
- HAZARD DIODE
Front
STARTER RELAY SWITCH 4P (Black) CONNECTOR
DLC
POWER BOX
BATTERY POSITIVE (+) CABLE TERMINAL
TURN SIGNAL RELAY 3P (Black) CONNECTOR
TURN SIGNAL RELAY 3P (Black) CONNECTOR
POWER BOX
BOOTS:
- BRAKE/TAIL LIGHT 2P (Black)/2P CONNECTOR
- LEFT REAR TURN SIGNAL LIGHT 2P (Gray) CONNECTOR
(DCT type) TCM 33P (Gray) CONNECTOR
(DCT type) TCM 33P (Black) CONNECTOR

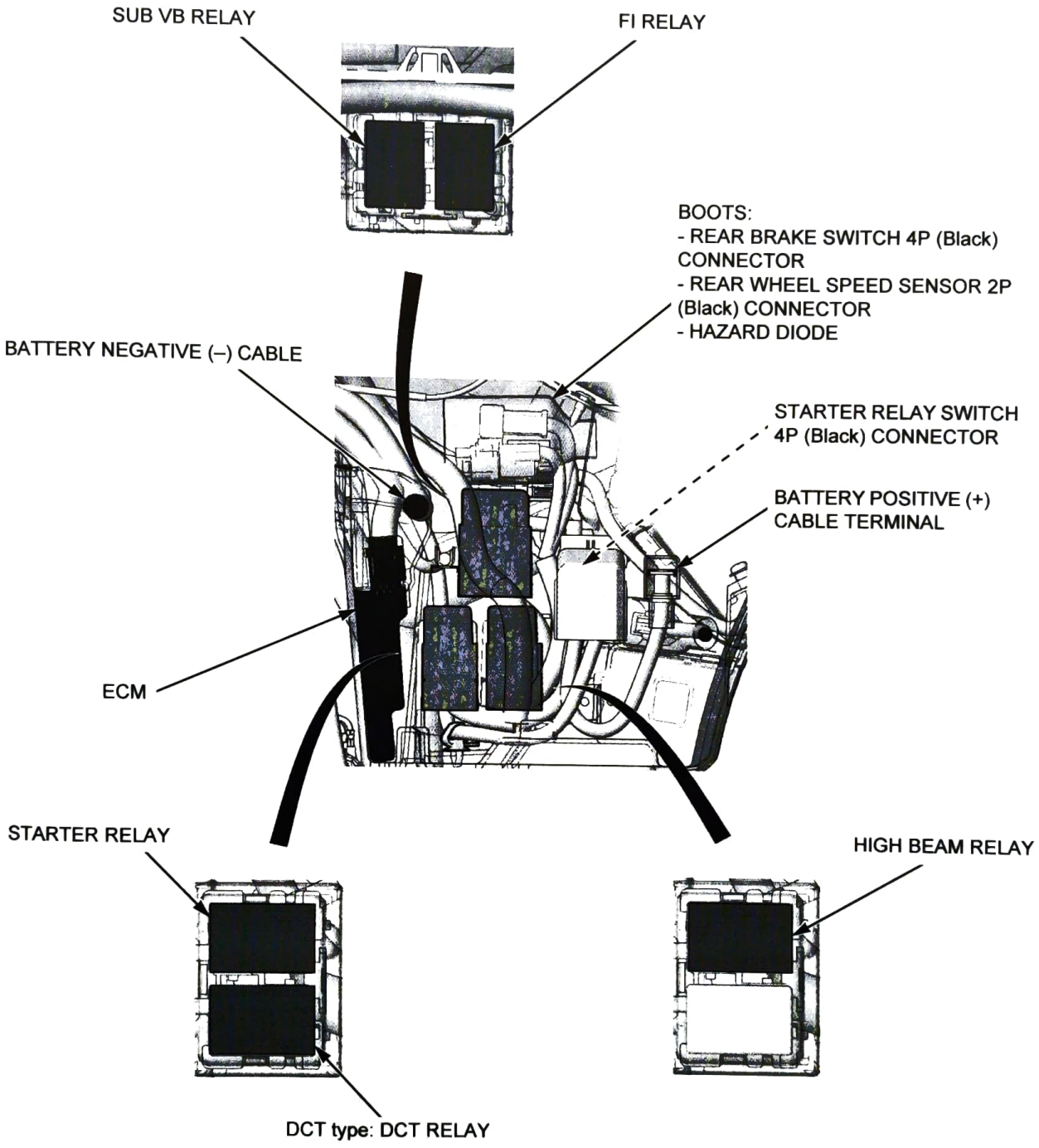
SUB VB RELAY
FI RELAY
BOOTS:
- REAR BRAKE SWITCH 4P (Black) CONNECTOR
- REAR WHEEL SPEED SENSOR 2P (Black) CONNECTOR
- HAZARD DIODE
BATTERY NEGATIVE (–) CABLE
STARTER RELAY SWITCH 4P (Black) CONNECTOR
BATTERY POSITIVE (+) CABLE TERMINAL
ECM
STARTER RELAY
HIGH BEAM RELAY
DCT type: DCT RELAY

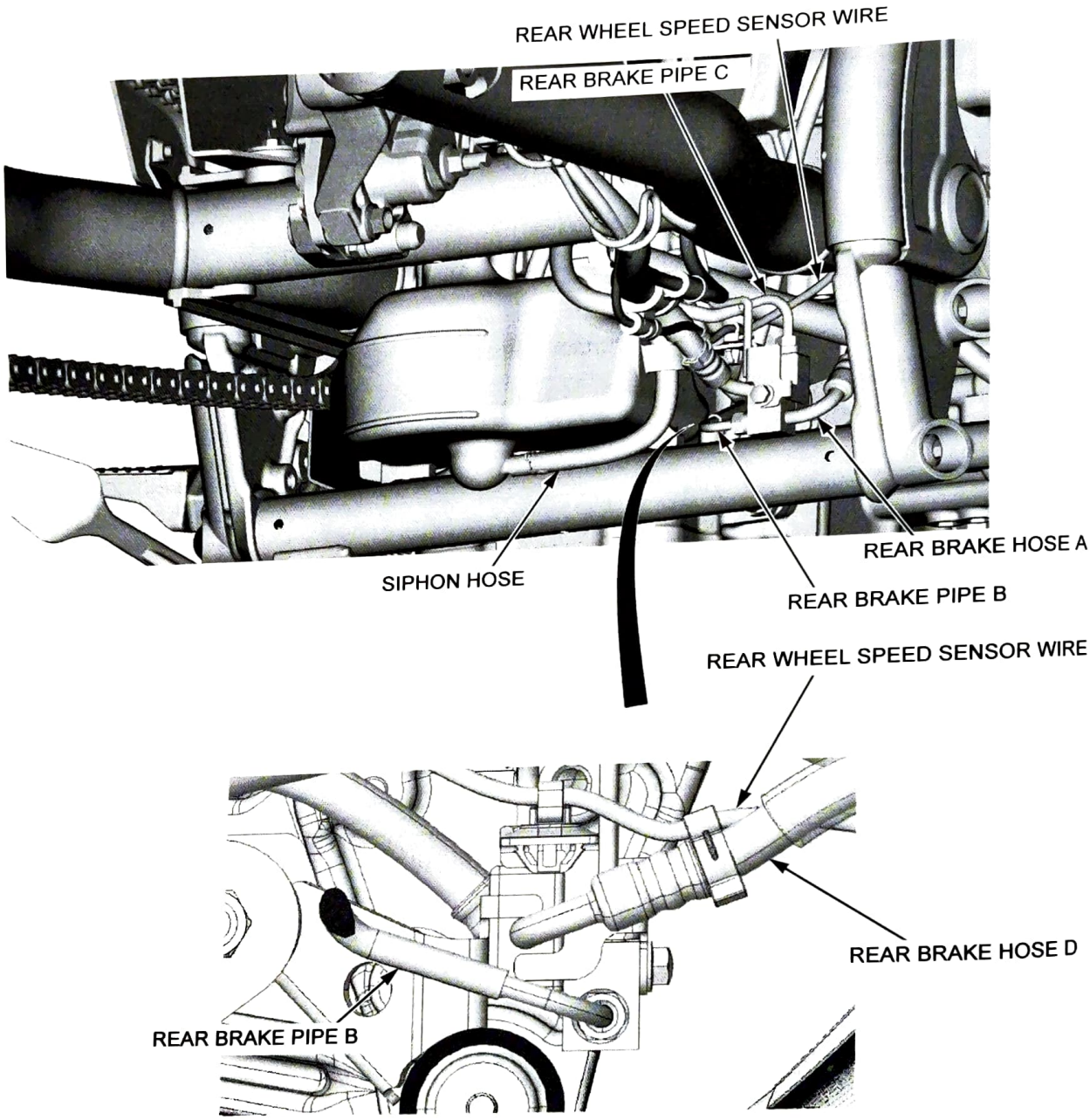
REAR WHEEL SPEED SENSOR WIRE
REAR BRAKE PIPE C
REAR BRAKE HOSE A
SIPHON HOSE
REAR BRAKE PIPE B
REAR WHEEL SPEED SENSOR WIRE
REAR BRAKE HOSE D
REAR BRAKE PIPE B

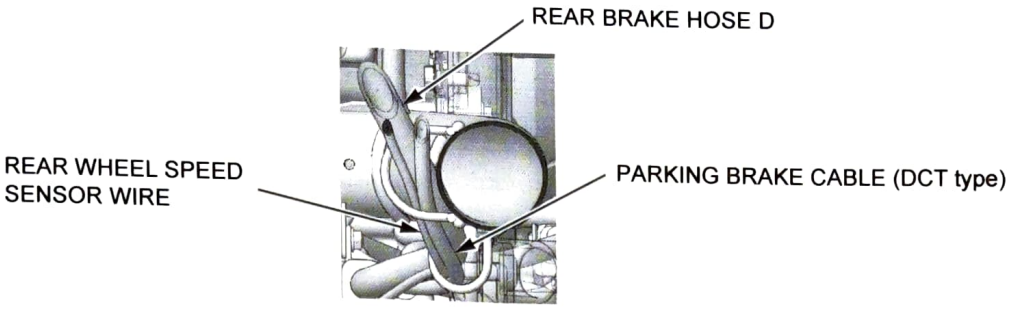
REAR BRAKE HOSE D
REAR WHEEL SPEED SENSOR WIRE
PARKING BRAKE CABLE (DCT type)

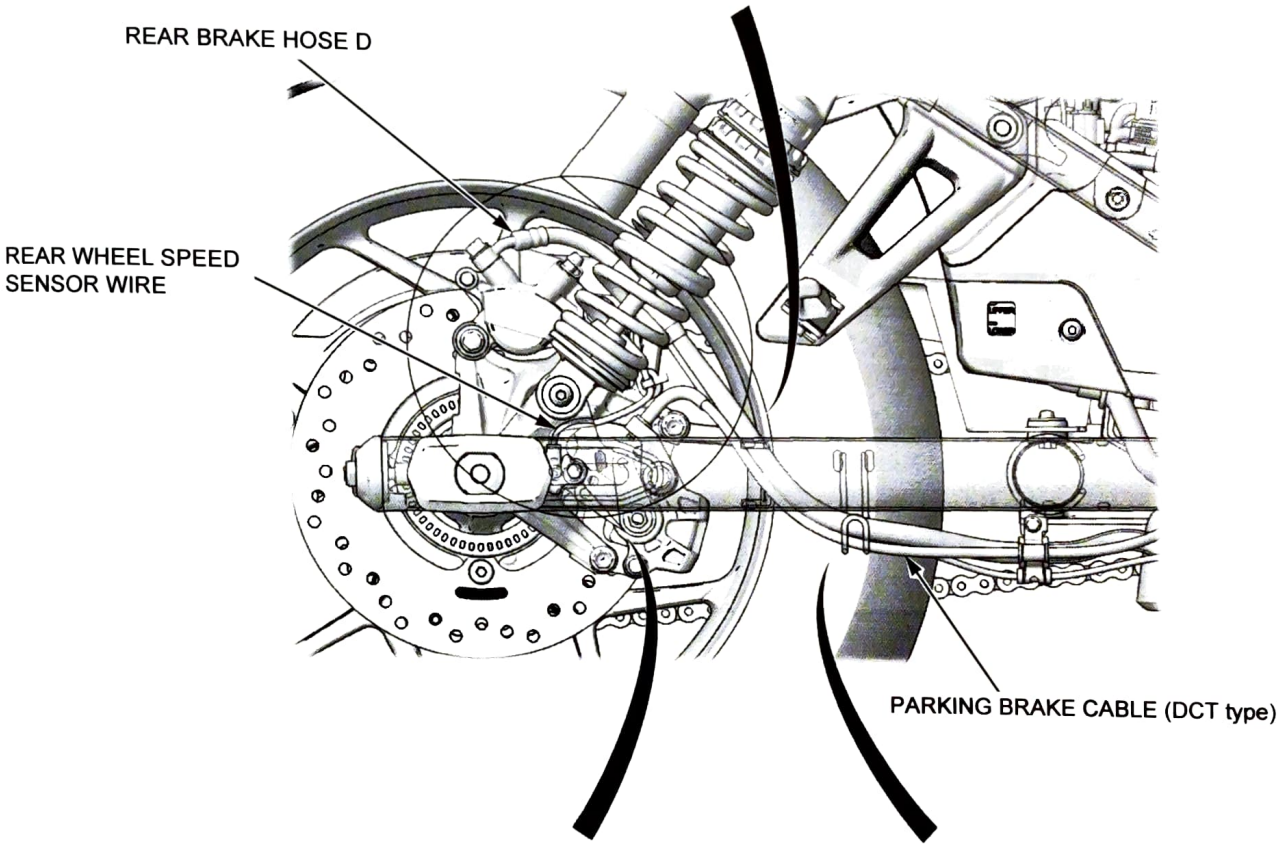
REAR BRAKE HOSE D
REAR WHEEL SPEED SENSOR WIRE
PARKING BRAKE CABLE (DCT type)

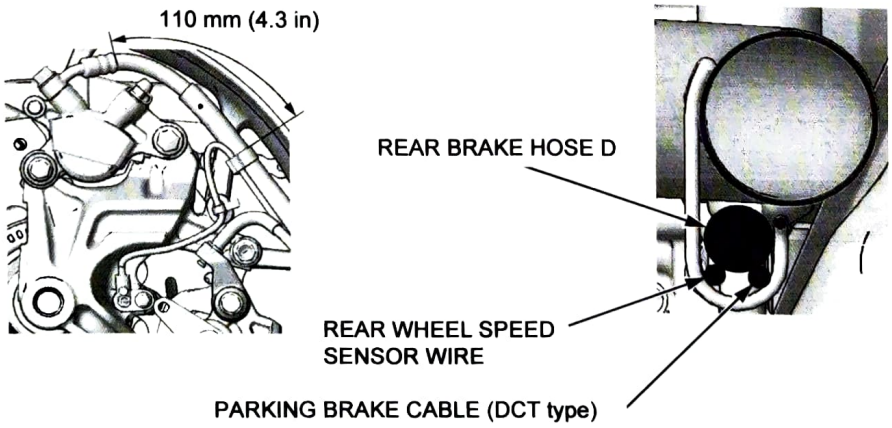
110 mm (4.3 in)
REAR BRAKE HOSE D
REAR WHEEL SPEED SENSOR WIRE
PARKING BRAKE CABLE (DCT type)

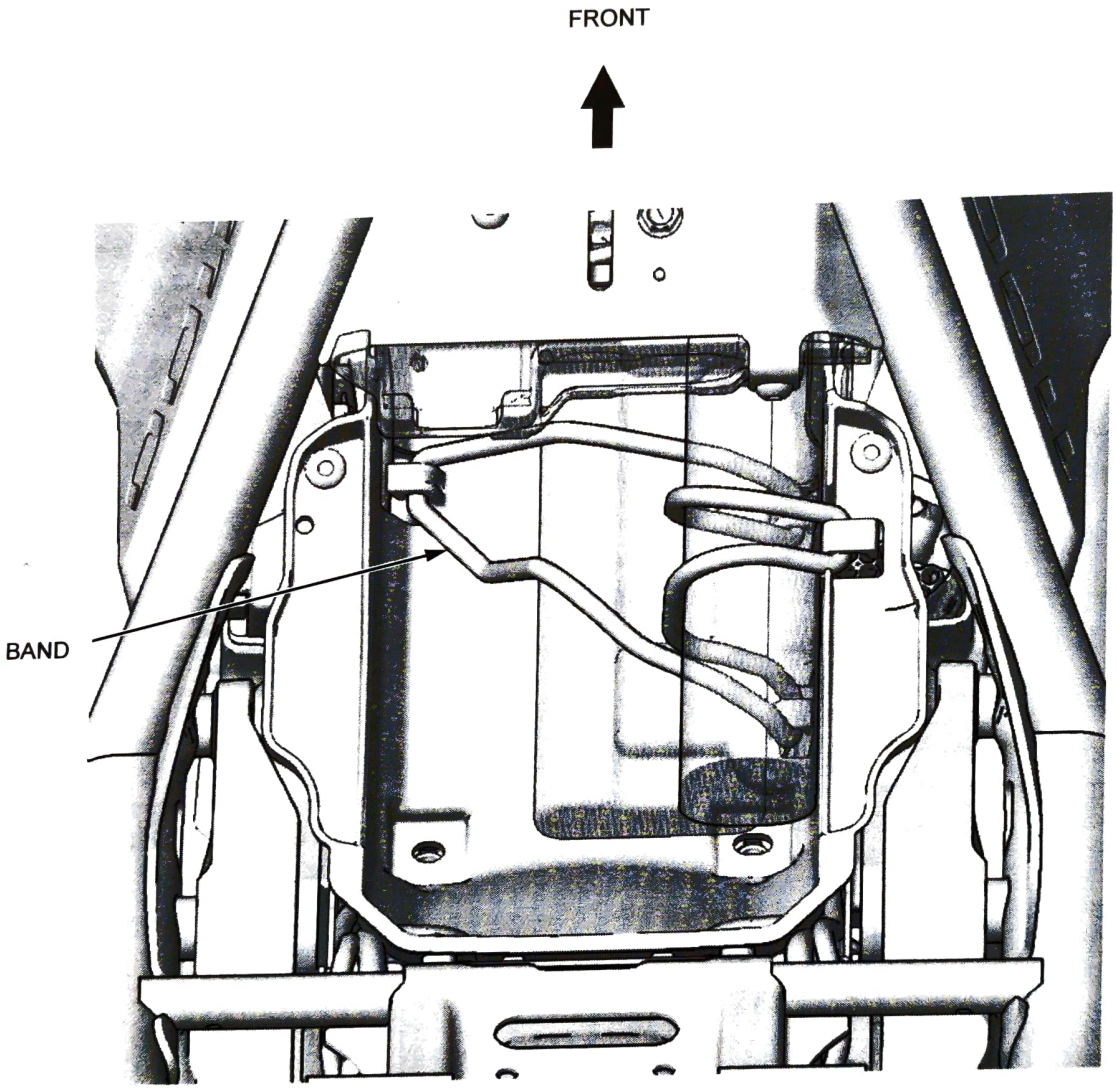
FRONT
BAND

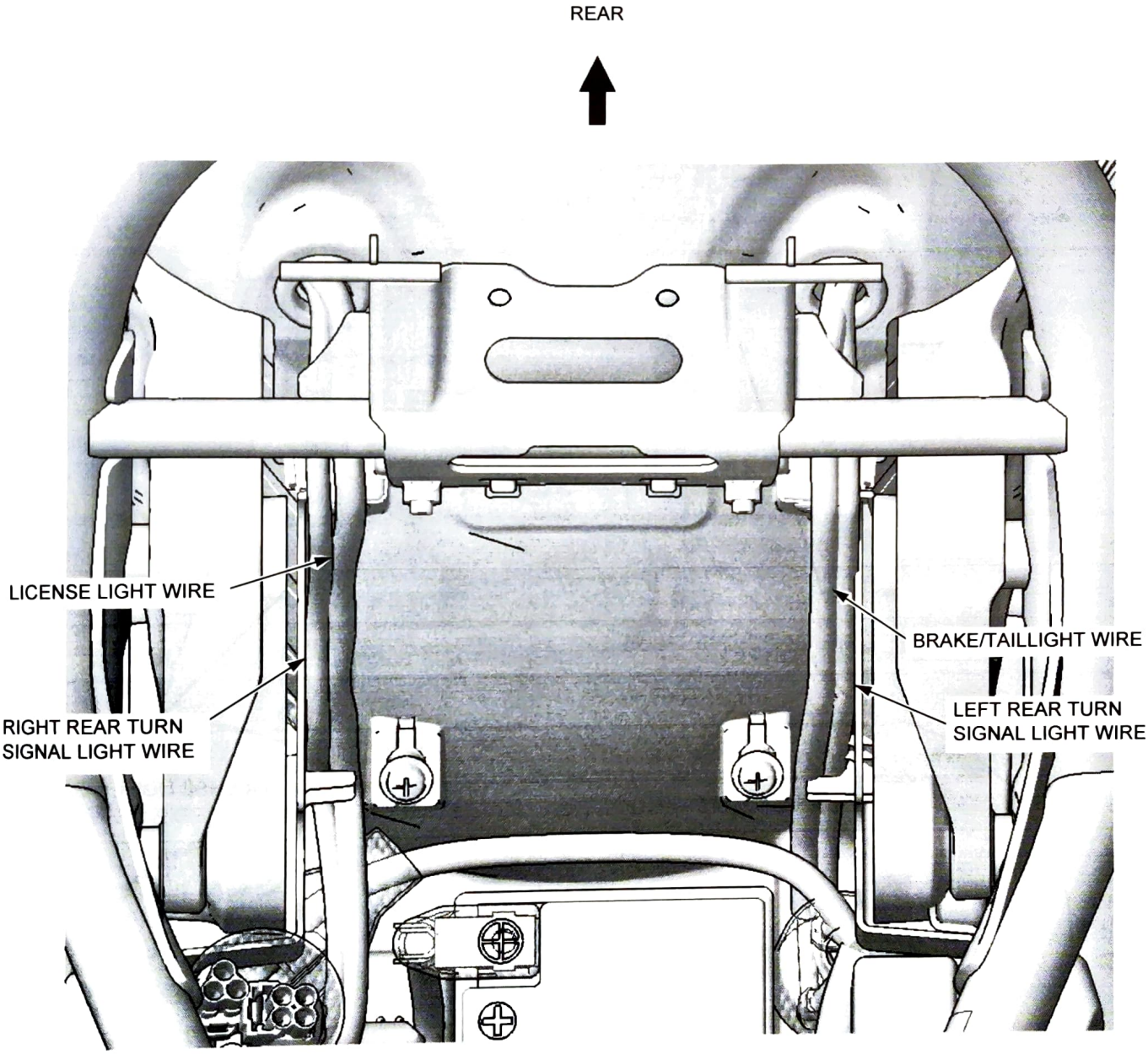
REAR
LICENSE LIGHT WIRE
RIGHT REAR TURN SIGNAL LIGHT WIRE
BRAKE/TAILLIGHT WIRE
LEFT REAR TURN SIGNAL LIGHT WIRE

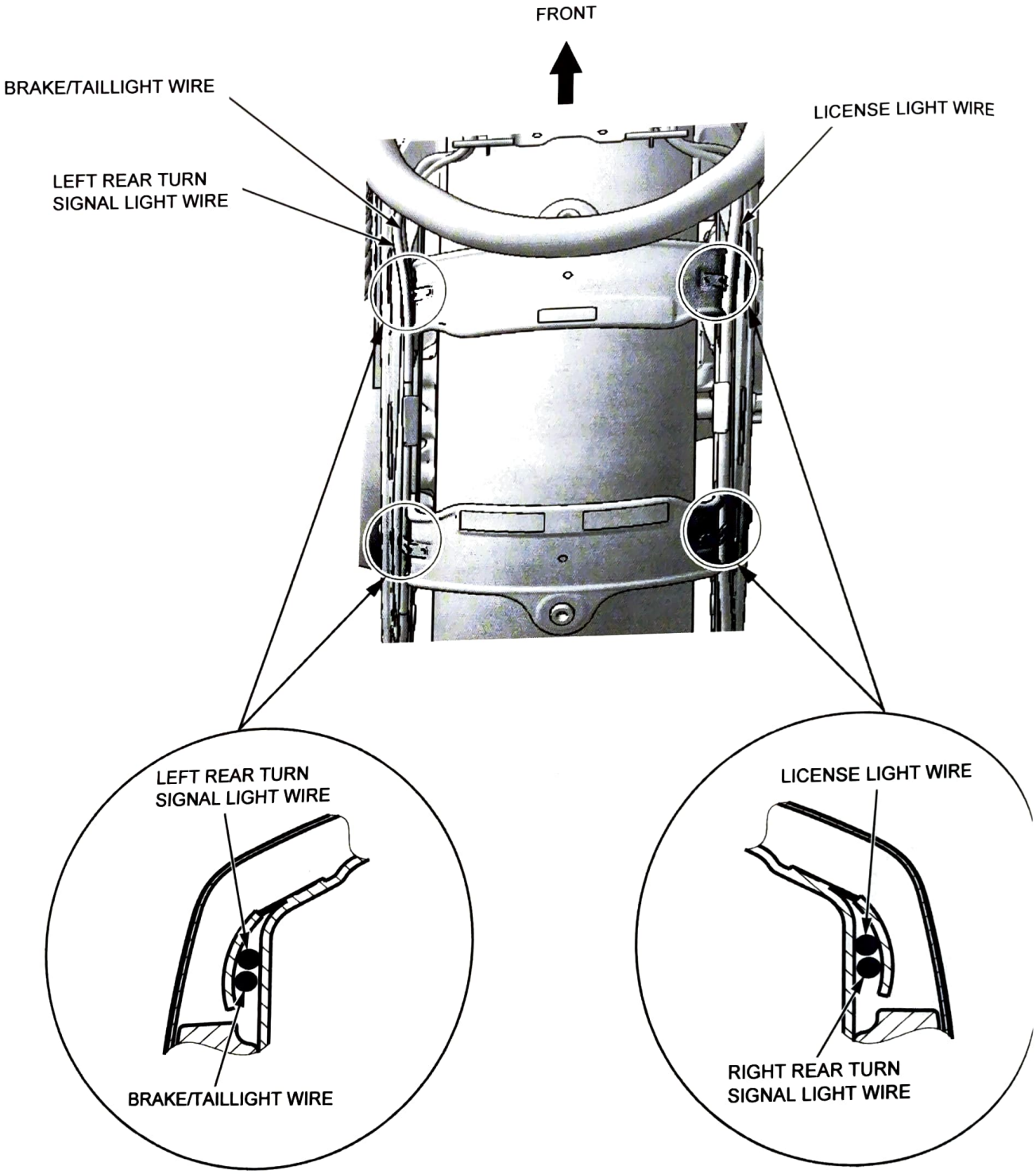
FRONT
BRAKE/TAILLIGHT WIRE
LEFT REAR TURN SIGNAL LIGHT WIRE
LICENSE LIGHT WIRE
LEFT REAR TURN SIGNAL LIGHT WIRE
BRAKE/TAILLIGHT WIRE
LICENSE LIGHT WIRE
RIGHT REAR TURN SIGNAL LIGHT WIRE

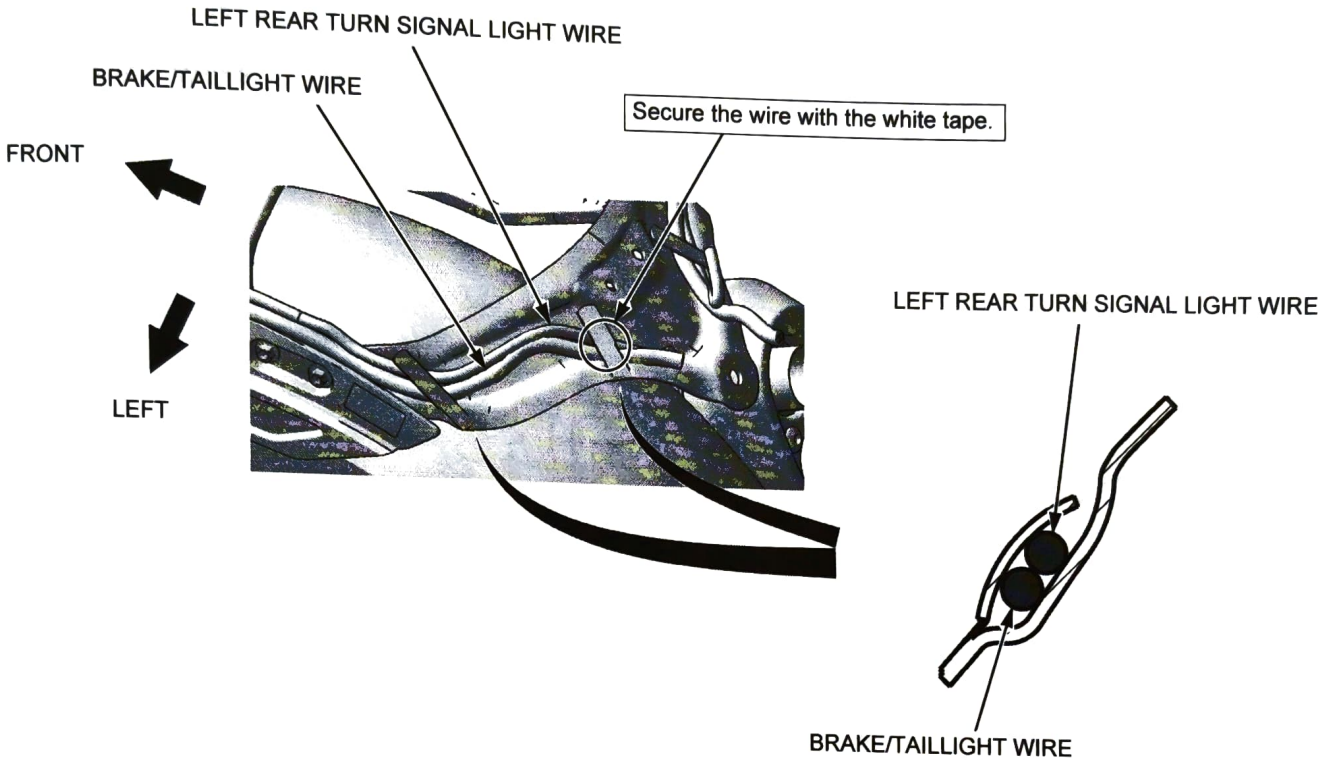
LEFT REAR TURN SIGNAL LIGHT WIRE
BRAKE/TAILLIGHT WIRE
Secure the wire with the white tape.
FRONT
LEFT
LEFT REAR TURN SIGNAL LIGHT WIRE
BRAKE/TAILLIGHT WIRE

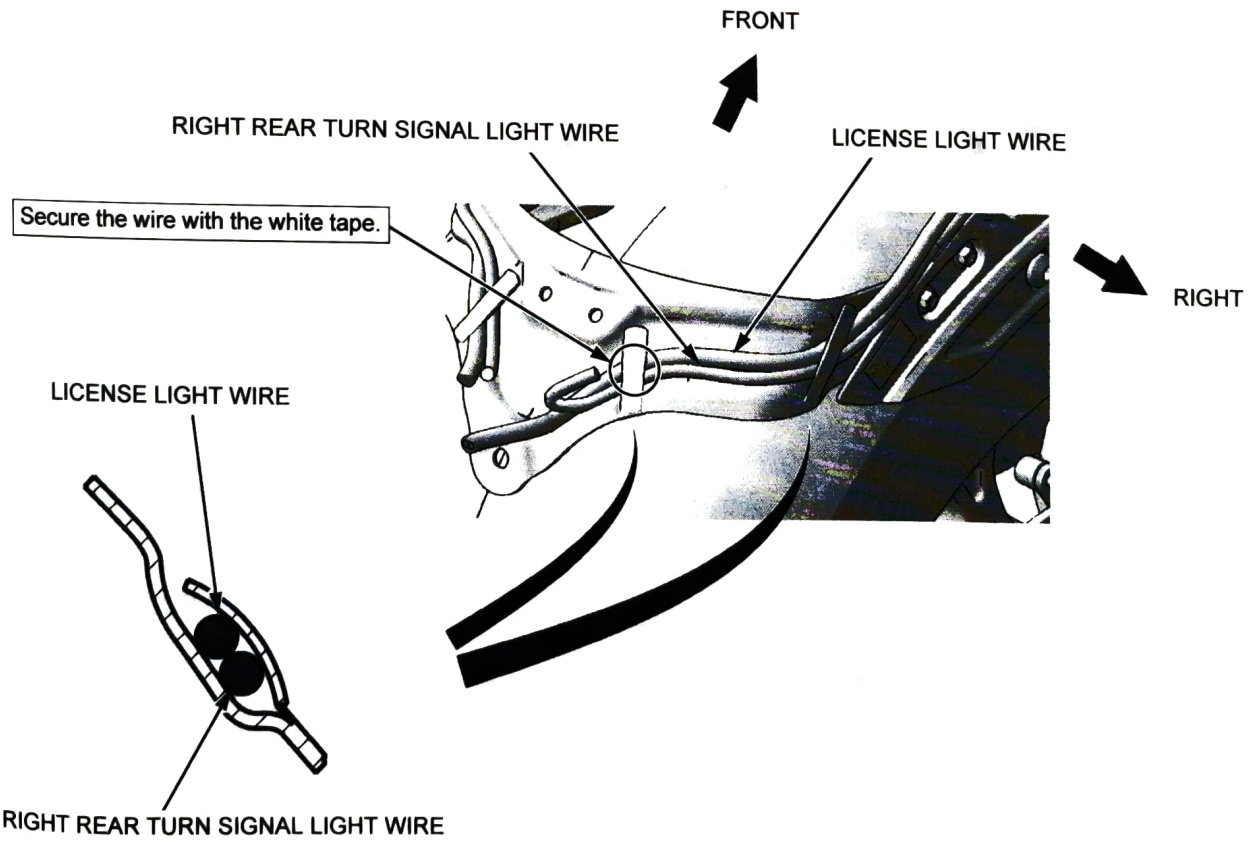
FRONT
RIGHT REAR TURN SIGNAL LIGHT WIRE
LICENSE LIGHT WIRE
Secure the wire with the white tape.
RIGHT
LICENSE LIGHT WIRE
RIGHT REAR TURN SIGNAL LIGHT WIRE

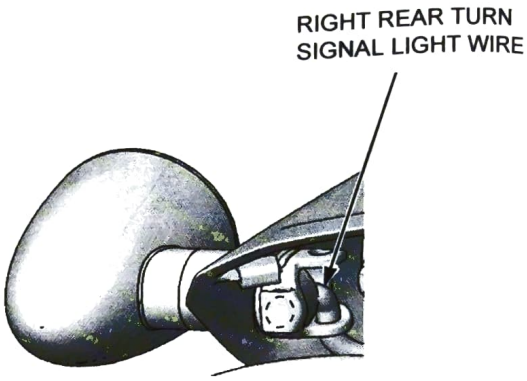
RIGHT REAR TURN
SIGNAL LIGHT WIRE

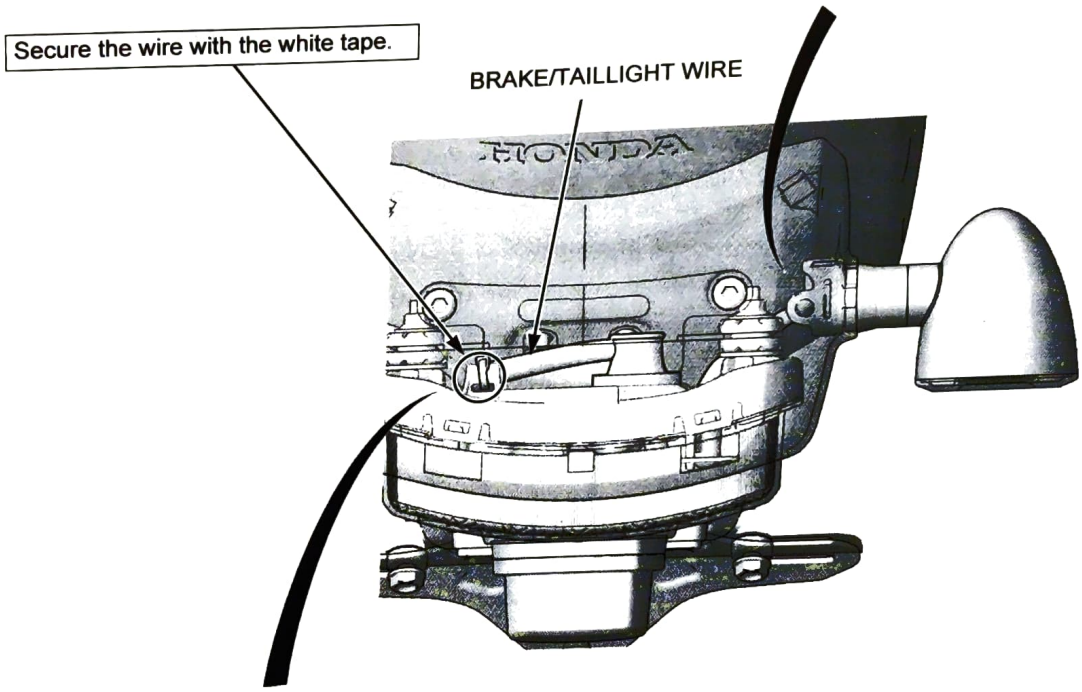
Secure the wire with the white tape.
BRAKE/TAILLIGHT WIRE
HONDA

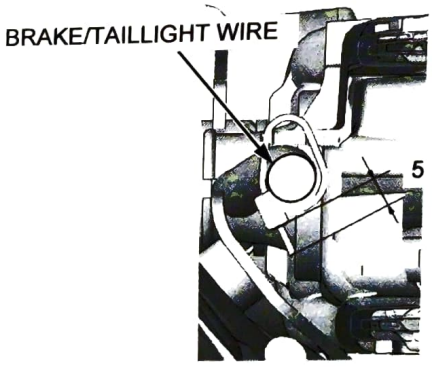
BRAKE/TAILLIGHT WIRE
5 mm (0.2 in) maximum

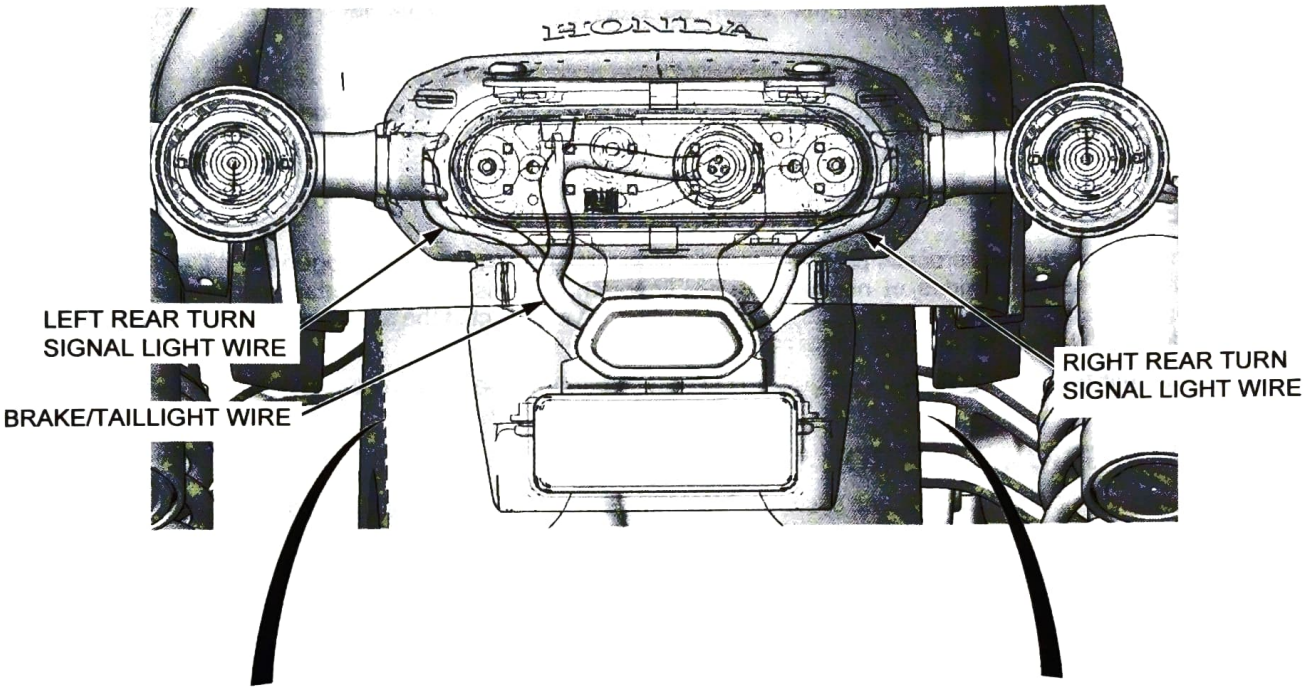
LEFT REAR TURN
SIGNAL LIGHT WIRE
BRAKE/TAILLIGHT WIRE
RIGHT REAR TURN
SIGNAL LIGHT WIRE

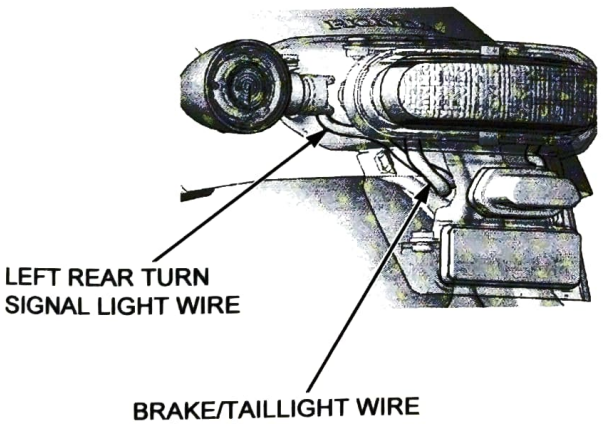
LEFT REAR TURN
SIGNAL LIGHT WIRE
BRAKE/TAILLIGHT WIRE

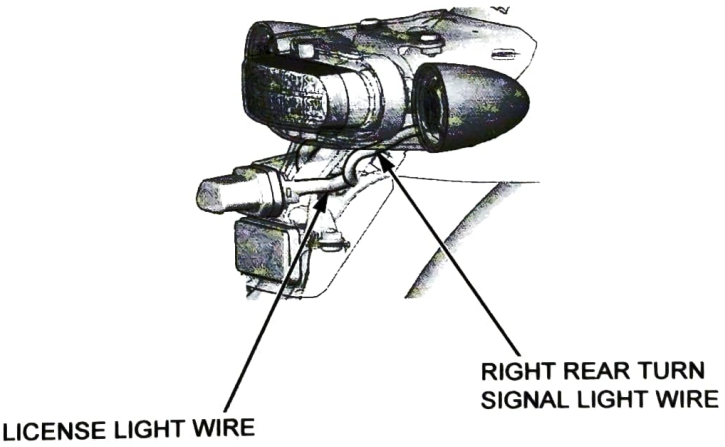
LICENSE LIGHT WIRE
RIGHT REAR TURN
SIGNAL LIGHT WIRE

EMISSION CONTROL SYSTEMS

EXHAUST EMISSION REQUIREMENT

The U.S. Environmental Protection Agency (EPA), California Air Resources Board (CARB) and Environment and Climate Change Canada (ECCC) require manufacturers to certify that their motorcycles comply with applicable exhaust emissions standards during their useful life, when operated and maintained according to the instructions provided.

NOISE EMISSION REQUIREMENT

The EPA also requires that motorcycles built after January 1, 1983 comply with applicable noise emission standards for one year or 3,730 miles (6,000 km) after the time of sale to the ultimate purchaser, when operated and maintained according to the instructions provided.

WARRANTY COMPLIANCE

Compliance with the terms of the Distributor's Limited Warranty for Honda Motorcycle Emission Control Systems is necessary in order to keep the emissions system warranty in effect.

SOURCE OF EMISSIONS

Fuel evaporation and the combustion process produces carbon monoxide (CO), oxides of nitrogen (NOx), and hydrocarbons (HC). The control of hydrocarbons and oxides of nitrogen is very important because, under certain conditions, they react to form photochemical smog when subjected to sunlight. Carbon monoxide does not react in the same way, but it is toxic. Uncontrolled fuel evaporation also releases hydrocarbons to the atmosphere.

Honda Motor Co., Ltd. utilizes various systems (page 1-61) to reduce carbon monoxide, hydrocarbons and oxides of nitrogen.

CRANKCASE EMISSION CONTROL SYSTEM

The engine is equipped with a closed crankcase system to prevent discharging crankcase emissions into the atmosphere.

Blow-by gas is returned to the combustion chamber through the air cleaner and throttle body.

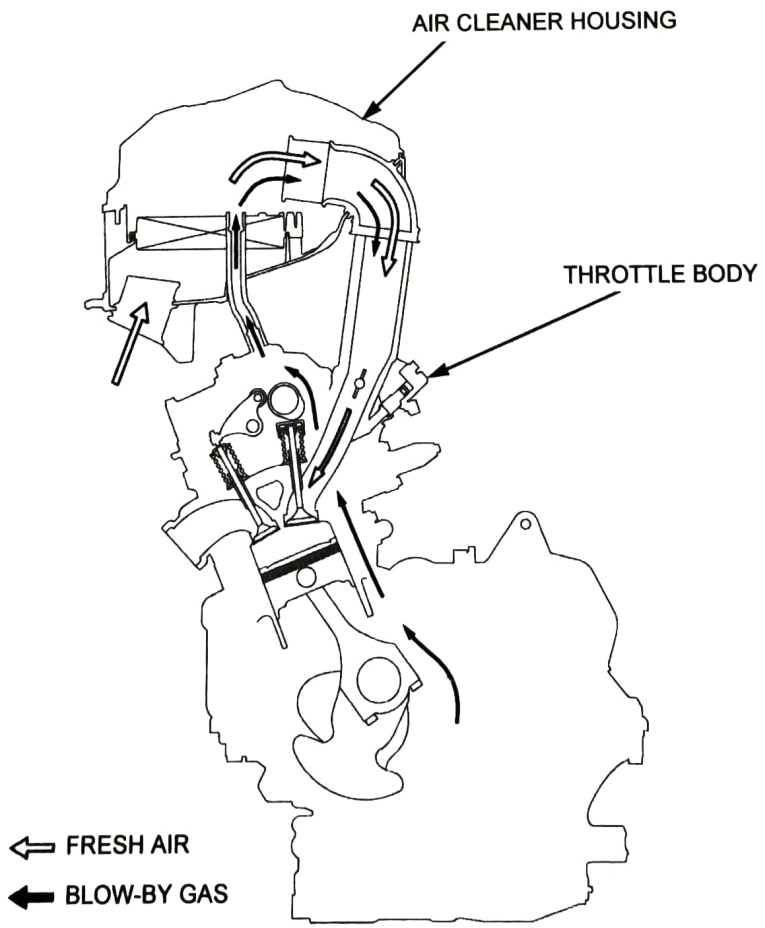

EXHAUST EMISSION CONTROL SYSTEM

The exhaust emission control system is composed of a pulse secondary air supply system, three-way catalytic converter and PGM-FI system.

SECONDARY AIR SUPPLY SYSTEM

The pulse secondary air supply system introduces filtered air into the exhaust gases in the exhaust port. Fresh air is drawn into the exhaust port by the function of the PAIR control solenoid valve.

This charge of fresh air promotes burning of the unburned exhaust gases and changes a considerable amount of hydrocarbons and carbon monoxide into relatively harmless carbon dioxide and water vapor.

The PAIR reed valve prevents reverse air flow through the system. The PAIR control solenoid valve is controlled by the ECM, and the fresh air passage is opened/closed according the running condition (ECT/IAT/TP/MAP sensor and engine revolution).

No adjustments to the secondary air supply system should be made, although periodic inspection of the components is recommended.

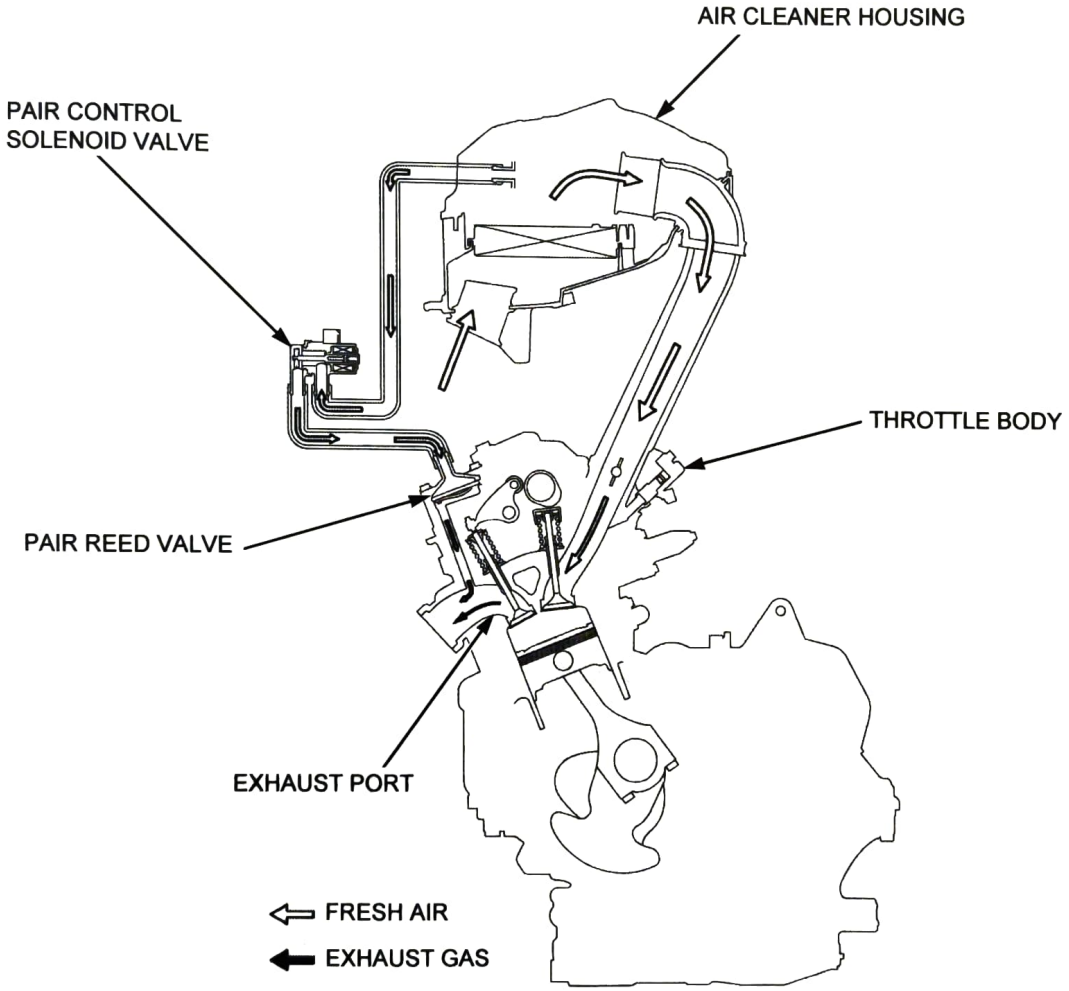

Three-way catalytic converter

This motorcycle is also equipped with three-way catalytic converter.

The three-way catalytic converter is in the exhaust system. Through chemical reactions, they convert HC, CO, and NOx in the engine's exhaust to carbon dioxide (CO_2), dinitrogen (N_2), and water vapor.

No adjustment to these systems should be made although periodic inspection of the components is recommended.

EVAPORATIVE EMISSION CONTROL SYSTEM

This model complies with CARB evaporative emission requirements. Fuel vapor from the fuel tank is routed into the EVAP canister where it is absorbed and stored while the engine is stopped. When the engine is running and the EVAP purge control solenoid valve is open, fuel vapor in the EVAP canister is drawn into the engine through the throttle body.

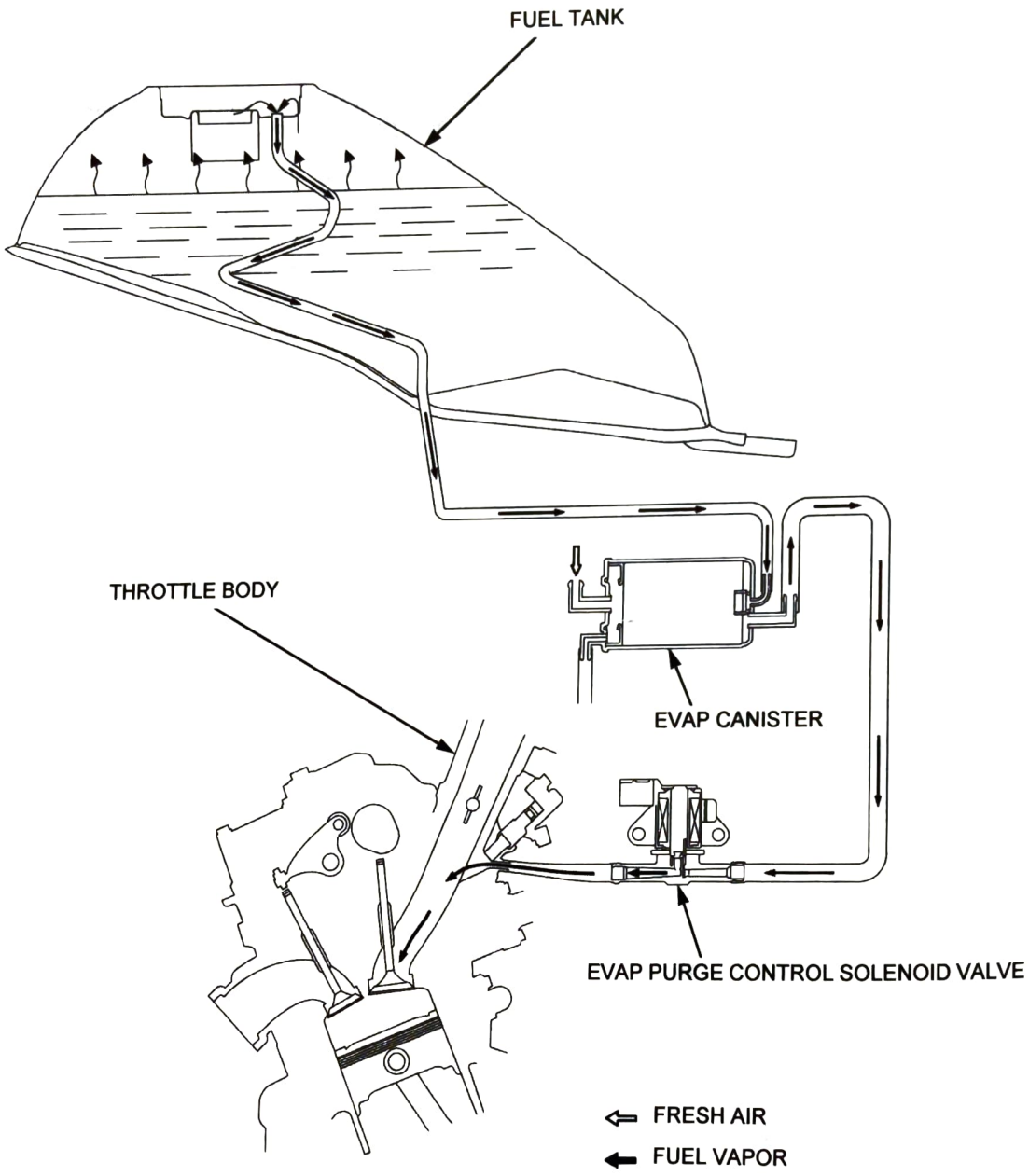

NOISE EMISSION CONTROL SYSTEM

TAMPERING WITH THE NOISE CONTROL SYSTEM IS PROHIBITED: U.S. Federal law prohibits, or Canadian provincial law may prohibit the following acts or the causing thereof: (1) The removal or rendering inoperative by any person, other than for purposes of maintenance, repair or replacement, of any device or element of design incorporated into any vehicle for the purpose of noise control prior to its sale or delivery to the ultimate customer or while it is in use; (2) the use of the vehicle after such device or element of design has been removed or rendered inoperative by any person.

AMONG THOSE ACTS PRESUMED TO CONSTITUTE TAMPERING ARE THE ACTS LISTED BELOW:

1. Removal of, or puncturing of the muffler, baffles, header pipes or any other component which conducts exhaust gases.
2. Removal of, or puncturing of any part of the intake system.
3. Lack of proper maintenance.
4. Removing or disabling any emissions compliance component, or replacing any compliance component with a non-compliant component.

FUEL PERMEATION EMISSION CONTROL SYSTEM

This motorcycle complies with the Fuel Permeation Emission Control regulations of the U.S. Environmental Protection Agency (EPA), the California Air Resources Board (CARB), and Environment and Climate Change Canada (ECCC). The fuel tank, fuel hoses, and fuel vapor charge hoses used on this motorcycle incorporate fuel permeation control technologies. Tampering with the fuel tank, fuel hoses, or fuel vapor charge hoses to reduce or defeat the effectiveness of the fuel permeation technologies is prohibited by federal regulations.

TECHNICAL FEATURES

OBD (On-Board Diagnostic) SYSTEM

This vehicle complies with the emission limits of OBD stage 1 regulation.

Existing PGM-FI system already equips the self-diagnostic system that detects a PGM-FI system malfunction, and that malfunction data can be read by the MCS (Motorcycle Communication System) as DTCs or freeze data.

Based on the existing PGM-FI diagnostic system, for OBD stage 1, the following items are equipped with this vehicle.

- Additional self-diagnostic function for the fuel emission control
- MIL indication pattern for malfunction
- GST (General Scan Tool) connection to the vehicle

PGM-FI SELF-DIAGNOSTIC SYSTEM

In addition to the existing self-diagnostic system, the following function and DTCs (Diagnostic Trouble Codes) are prepared on (page 4-11).

- EVAP Canister Purge valve circuit
- PAIR valve circuit
- Ignition Primary circuit

MIL INDICATION

In the existing PGM-FI system, if the PGM-FI system detects a malfunction at present, the MIL blinks the number of trouble code with idle engine speed.

But in this PGM-FI system for OBD, when the system detects a malfunction, it turns the MIL ON without blinking unless otherwise the SCS circuit short (reading DTC with DLC connector).

MIL indication

	PGM-FI SYSTEM for OBD			Existing PGM-FI SYSTEM		
	At Idle	Riding	SCS short	At Idle	Riding	SCS short
Current trouble	ON	ON	Blinking	Blinking	ON	Blinking
Past trouble	*ON	*ON	*Blinking	OFF	OFF	Blinking

* This system turns off the MIL if the system does not detect the same trouble again in three driving cycle (three times repeat of ignition-ON, riding and ignition-OFF).

GST (General Scan Tool) CONNECTION

The PGM-FI system of this vehicle supports the connection of the GST that is commercially available as a diagnostic tool for the vehicle. As similar to MCS (Motorcycle Communication System; Honda genuine diagnostic tool), the GST can be used for DTC, freeze data and ECM data reading.

The DTCs read by the GST are standardized by ISO standards, those are different code system from existing Honda code system read by MCS. Refer to DTC INDEX (page 4-11) for each DTC and troubleshooting detail.

To connect the GST to the vehicle, remove the 6P dummy connector and connect the GST.

For using the GST, refer to the GST instruction manual.



OBD harness circuit connection (General allocation in ISO 15031-3)

	DLC 6P	16P
Signal ground	A	5
CAN_H	B	6
Discretionary (SCS line)	C	9
K-line	D	7
CAN_L	E	14
Permanent positive battery	F	16

MEMO

2. FRAME/BODY PANELS/EXHAUST SYSTEM

SERVICE INFORMATION 2-2

TROUBLESHOOTING 2-2

BODY PANEL LOCATIONS 2-3

PASSENGER SEAT (CM model) 2-4

MAIN SEAT 2-4

SIDE COVER 2-4

FRONT SIDE COVER 2-5

FRONT AIR CLEANER COVER 2-5

REAR AIR CLEANER COVER 2-6

REARVIEW MIRROR 2-6

FRONT FENDER 2-7

REAR FENDER 2-8

DRIVE SPROCKET COVER 2-9

DRIVE CHAIN COVER 2-9

HEEL GUARD 2-10

CLUTCH EOP SENSOR COVER (DCT type) 2-10

RIGHT REAR ENGINE COVER (MT type) 2-10

LEFT ENGINE COVER 2-11

SEAT CATCH HOOK 2-11

TOOL BOX 2-12

BATTERY CASE 2-12

CONNECTOR BOX 2-15

SIDESTAND 2-15

MUFFLER 2-16

EXHAUST PIPE 2-17

SERVICE INFORMATION

GENERAL

- This section covers removal and installation of the body panels and exhaust system.
- Serious burns may result if the exhaust system is not allowed to cool before components are removed or serviced.
- Always replace the exhaust pipe gasket with new ones after removing the exhaust pipe from the engine.
- When installing the exhaust system, loosely install all of the exhaust pipe fasteners. Always tighten the exhaust pipe joint nuts first, then tighten the mounting bolts.
- Always inspect the exhaust system for leaks after installation.

TROUBLESHOOTING

Excessive exhaust noise
- Broken exhaust system
- Exhaust gas leak

Poor performance
- Deformed exhaust system
- Exhaust gas leak
- Clogged muffler

BODY PANEL LOCATIONS

DCT type shown:

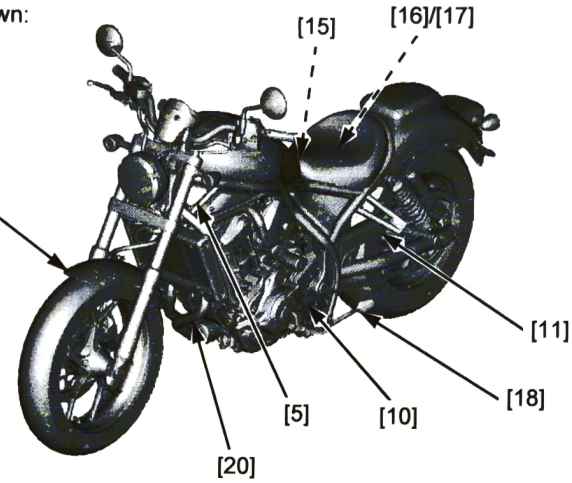

DCT type:

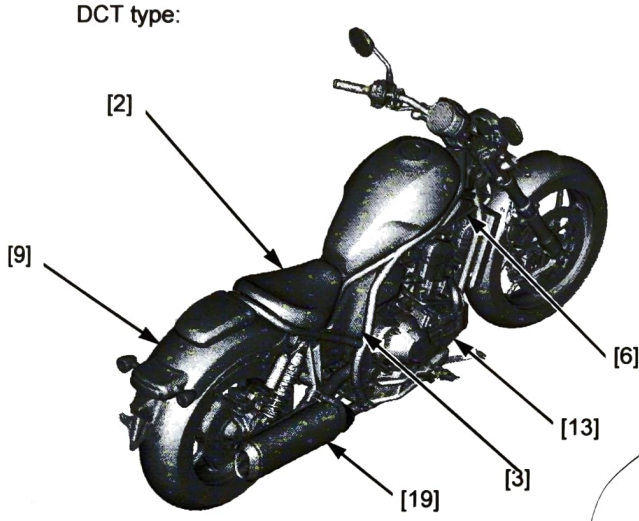

MT type:

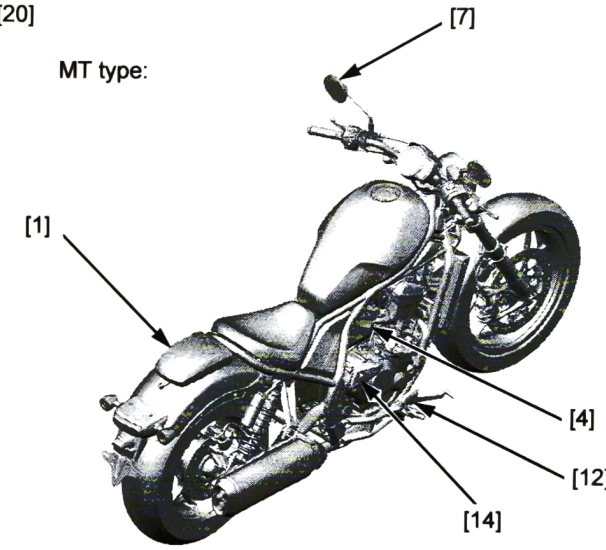

[1] Passenger Seat (CM model) (page 2-4)
[2] Main Seat (page 2-4)
[3] Side Cover (page 2-4)
[4] Front Side Cover (page 2-5)
[5] Front Air Cleaner Cover (page 2-5)
[6] Rear Air Cleaner Cover (page 2-6)
[7] Rearview Mirror (page 2-6)
[8] Front Fender (page 2-7)
[9] Rear Fender (page 2-8)
[10] Drive Sprocket Cover (page 2-9)
[11] Drive Chain Cover (page 2-9)
[12] Heel Guard (page 2-10)
[13] Clutch EOP Sensor Cover (DCT type) (page 2-10)
[14] Right Rear Engine Cover (MT type) (page 2-10)
[15] Seat Catch Hook (page 2-11)
[16] Tool Box (page 2-12)
[17] Battery Case (page 2-12)
[18] Sidestand (page 2-15)
[19] Muffler (page 2-16)
[20] Exhaust Pipe (page 2-17)

- This chart shows removal order of frame covers by means of arrow.

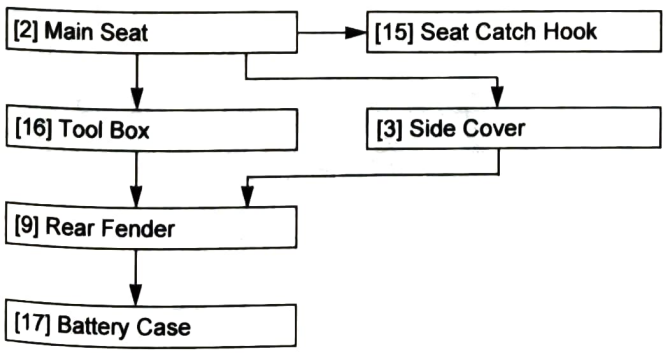

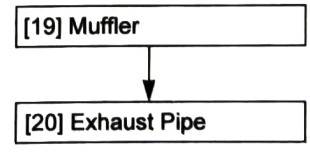

PASSENGER SEAT (CM model)

REMOVAL/INSTALLATION

Remove the mounting bolts [1] and washers [2].
Remove the passenger seat [3].

Installation is in the reverse order of removal.

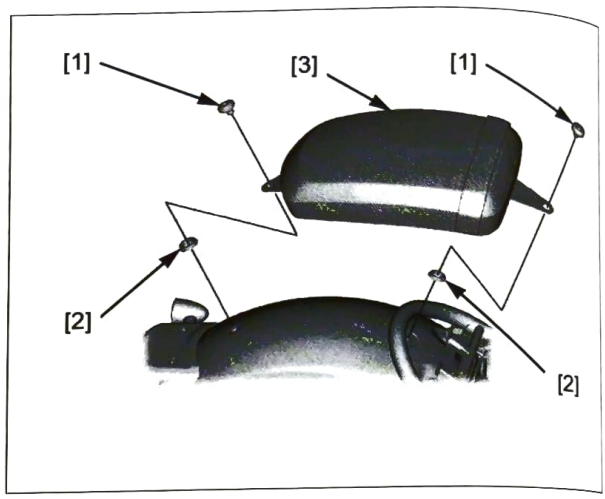

MAIN SEAT

REMOVAL/INSTALLATION

Unlock the main seat [1] using the ignition key [2].

Remove the main seat.

Installation is in the reverse order of removal.

NOTE:

- Align the main seat hooks [3] with the seat rail.

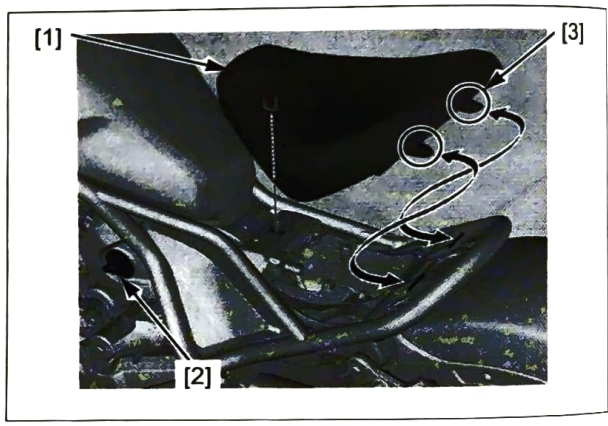

SIDE COVER

REMOVAL/INSTALLATION

Remove the main seat (page 2-4).

Remove the clip [1].

Slide the side cover [2] slightly backwards, pull out the tab [3] from the grommet [4], and remove the side cover.

Installation is in the reverse order of removal.

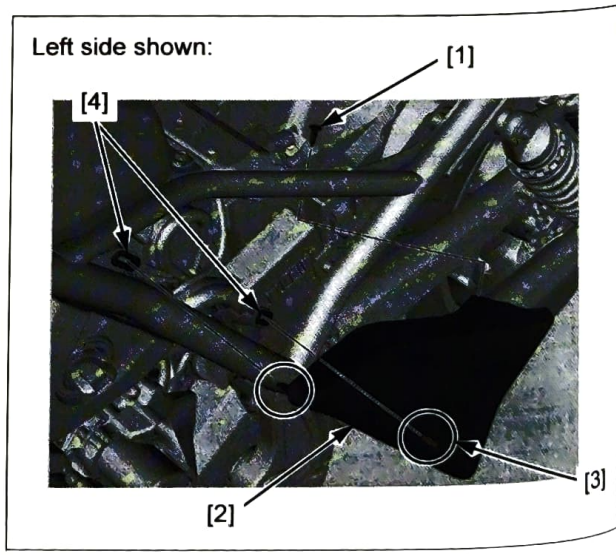

FRONT SIDE COVER

REMOVAL/INSTALLATION

Release the front cover bosses [1] from the grommets [2].

Remove the front side cover [3].

Installation is in the reverse order of removal.

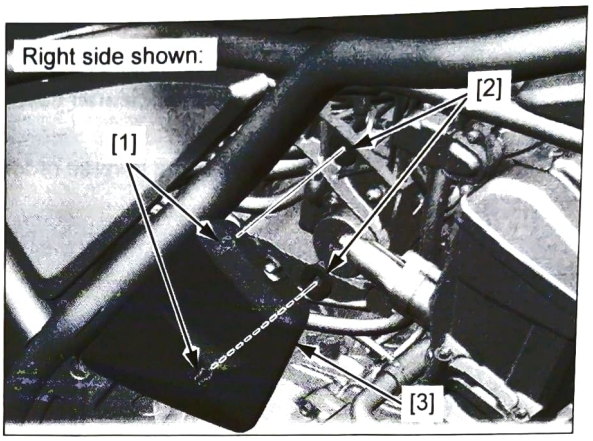

FRONT AIR CLEANER COVER

REMOVAL/INSTALLATION

Remove the special bolt [1] and the front air cleaner cover [2].

Installation is in the reverse order of removal.

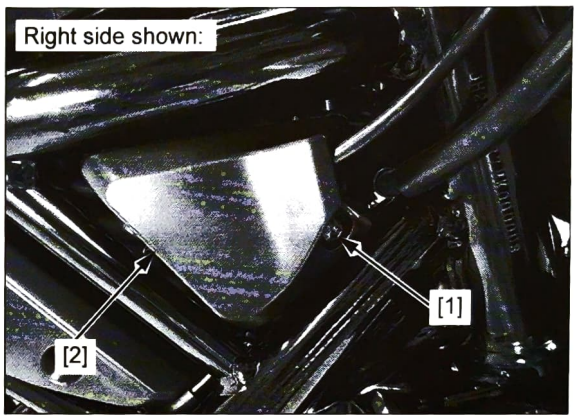

REAR AIR CLEANER COVER

REMOVAL/INSTALLATION

Remove the special bolt [1].

Slide the rear air cleaner cover [2] slightly backwards, remove the rear air cleaner cover and the mount rubber [3].

Installation is in the reverse order of removal.

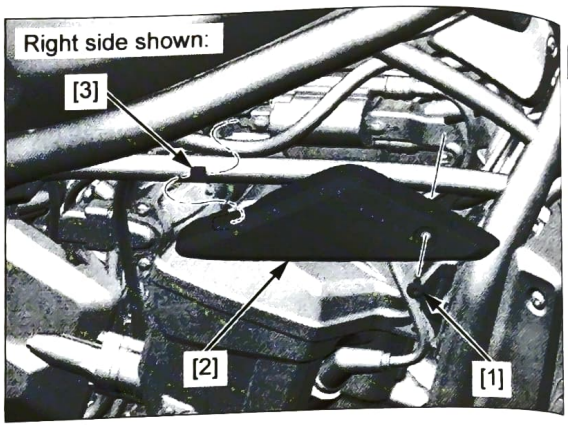

REARVIEW MIRROR

REMOVAL/INSTALLATION

Slide the boot [1] off from the lock nut [2].

Loosen the lock nut (left-hand threads) and remove the rearview mirror [3].

Remove the mirror adapter [4].

Installation is in the reverse order of removal.

TORQUE:

Rearview mirror adapter/lock nut
19 N·m (1.9 kgf·m, 14 lbf·ft)

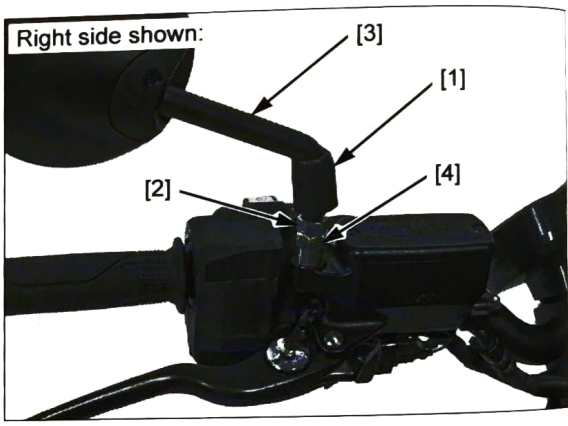

FRONT FENDER

REMOVAL

Remove the following:

- Front wheel (page 17-14)
- Brake hose guide mounting bolt [1]
- Brake hose guide [2]
- Two reflector mounting nuts [3]
- Two reflectors [4]
- Four socket bolts [5]
- Four special nuts [6]
- Two front fender inner brackets [7]
- Two front fender outer brackets [8]
- Front fender brace [9]
- Front fender [10]

INSTALLATION

Install the removed parts.

1. Install the front fender outer brackets and front fender inner brackets with "△" triangle mark [11] toward front.
2. Temporarily install the socket bolts.
3. Install the front wheel and tighten the front axle nut to the specified torque (page 17-14).
4. Tighten the front socket bolts first, then tighten the rear socket bolts.

TORQUE:

Front reflector mounting nut:

1.5 N·m (0.2 kgf·m, 1.1 lbf·ft)

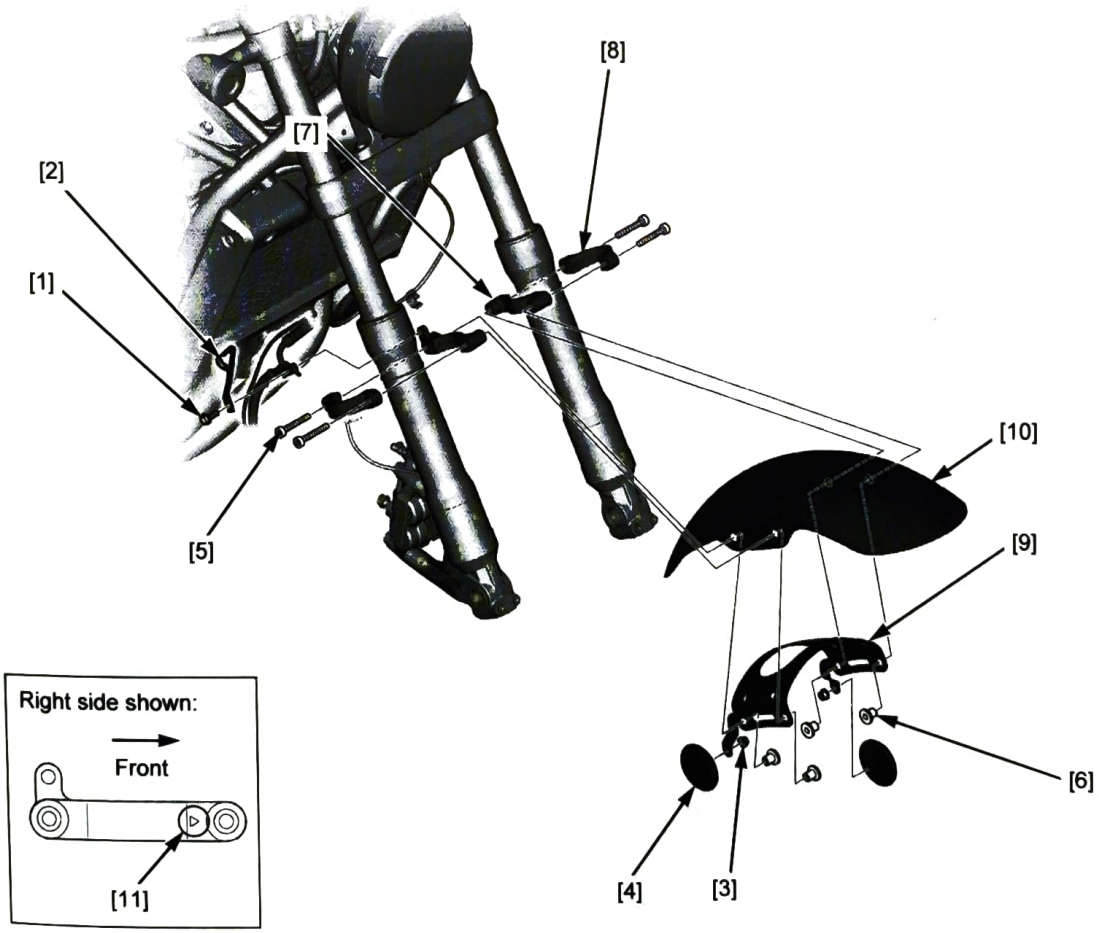

REAR FENDER

REMOVAL/INSTALLATION

Remove the following:

- Tool box (page 2-12)
- Rear wheel (page 18-5)

Disconnect the following connectors [1] in the connector boot:

- Turn signal 2P (Black)
- Turn signal 2P (Light gray)
- License light 2P (White)
- Brake/taillight 1P/2P

Remove the following:

- Socket bolts [2] and washers [3]
- Passenger footpeg brackets [4]
- Bolts [5]
- Rear fender [6]

Installation is in the reverse order of removal.

NOTE:

- Temporarily fix six mounting bolts and tighten the six mounting bolts to the specified torque in the sequence as shown.

TORQUE:

Rear fender mounting socket bolt:
44 N·m (4.5 kgf·m, 32 lbf·ft)

Rear fender mounting bolt:
44 N·m (4.5 kgf·m, 32 lbf·ft)

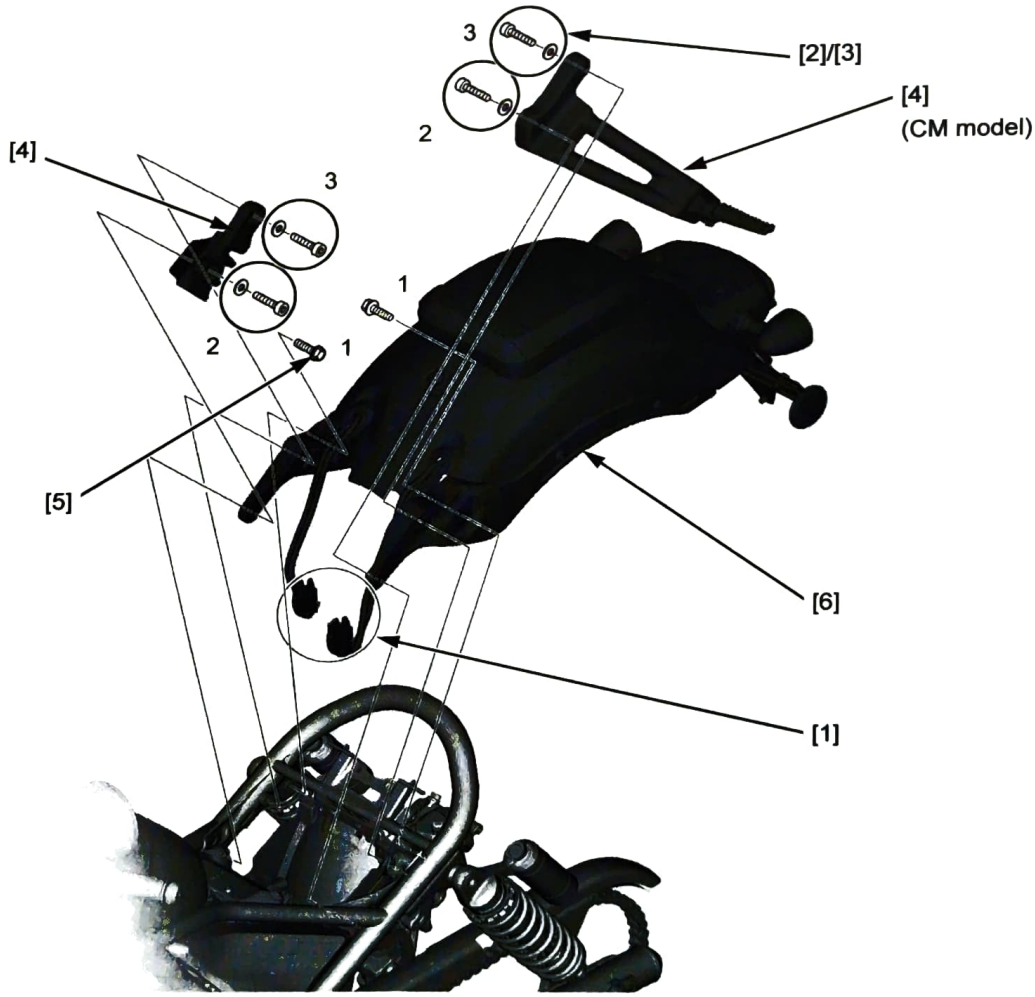

DRIVE SPROCKET COVER

REMOVAL/INSTALLATION

Release the harness clip [1] from the drive sprocket cover [2].

Remove the following:

- Two socket bolts [3]
- Drive chain guide [4]

Installation is in the reverse order of removal.

NOTE:

- When installing, align the tabs [5] on the drive sprocket cover with the holes [6] of the chain guide.
- Route the wires properly (page 1-27).

TORQUE: 12 N·m (1.2 kgf·m, 9 lbf·ft)

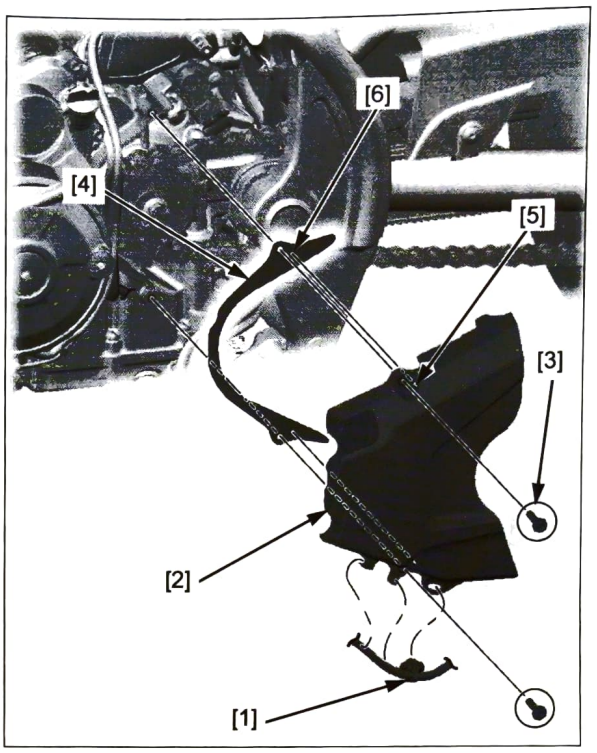

DRIVE CHAIN COVER

REMOVAL/INSTALLATION

Remove two socket bolts [1].

Slide the drive chain cover [2] slightly backwards from mounting rubber [3].

Installation is in the reverse order of removal.

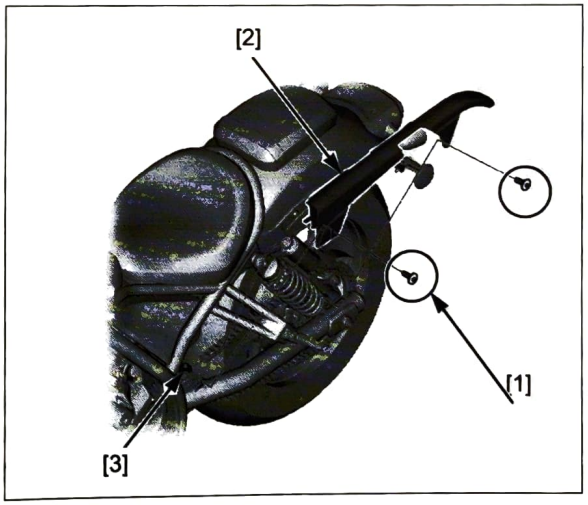

HEEL GUARD

REMOVAL/INSTALLATION

Remove the socket bolts [1] and heel guard [2].

Installation is in the reverse order of removal.

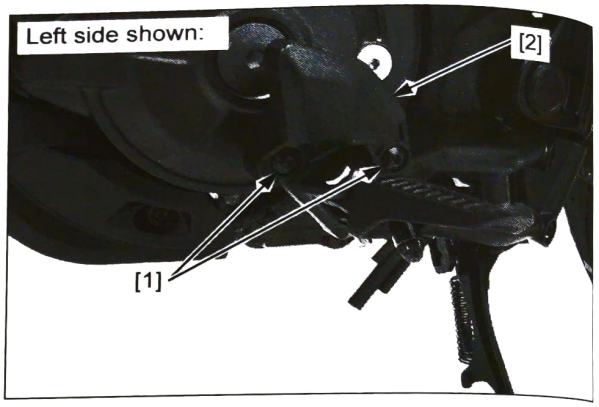

CLUTCH EOP SENSOR COVER (DCT type)

REMOVAL/INSTALLATION

Remove the socket bolts [1] and the clutch EOP sensor cover [2].

Installation is in the reverse order of removal.

TORQUE:

Clutch EOP sensor cover socket bolt:
10 N·m (1.0 kgf·m, 7 lbf·ft)

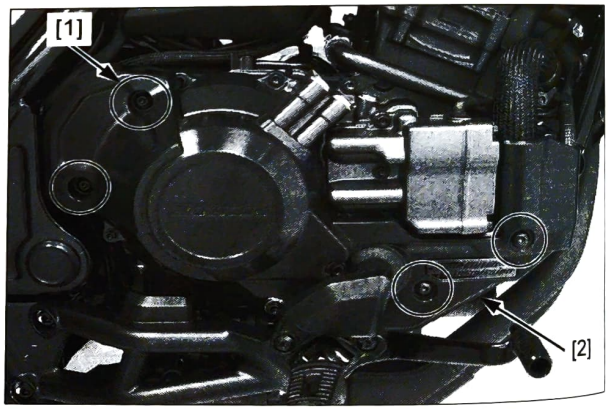

RIGHT REAR ENGINE COVER (MT type)

REMOVAL/INSTALLATION

Remove the right rear engine cover bolts [1] and right rear engine cover [2].

Installation is in the reverse order of removal.

TORQUE:

Right rear engine cover bolt:
10 N·m (1.0 kgf·m, 7 lbf·ft)

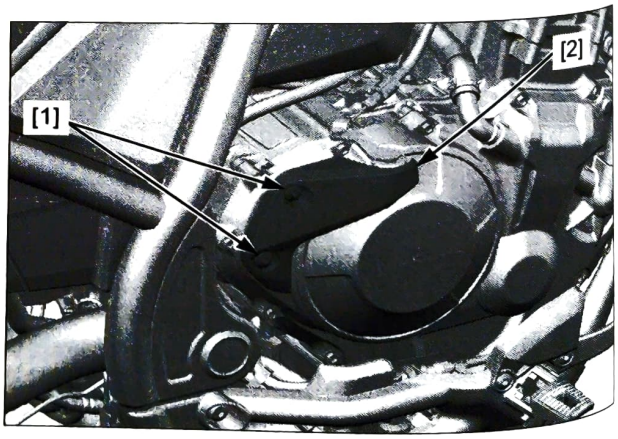

LEFT ENGINE COVER

REMOVAL/INSTALLATION

Remove the two socket bolts [1] and left engine cover [2].

Installation is in the reverse order of removal.

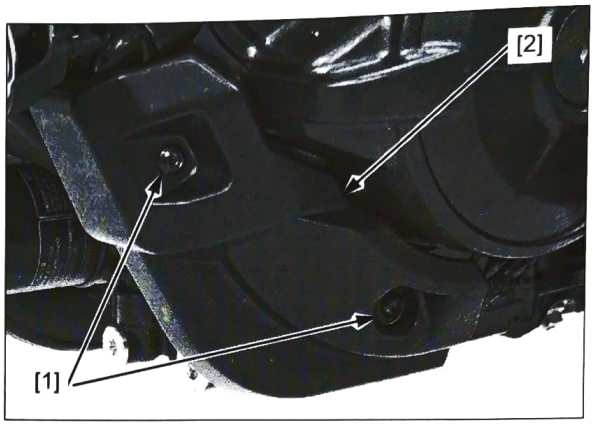

SEAT CATCH HOOK

REMOVAL/INSTALLATION

Remove the main seat (page 2-4).

Remove the bolt [1] and socket bolts [2].

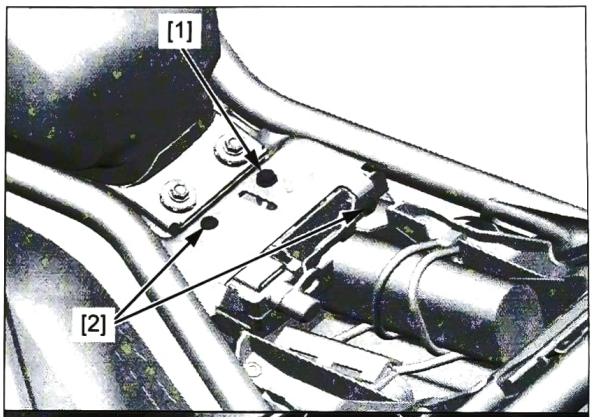

Disconnect the seat lock cable [1] from the seat catch hook [2] and remove the seat catch hook.

Installation is in the reverse order of removal.

NOTE:

- Apply grease to the seat catch hook sliding area.

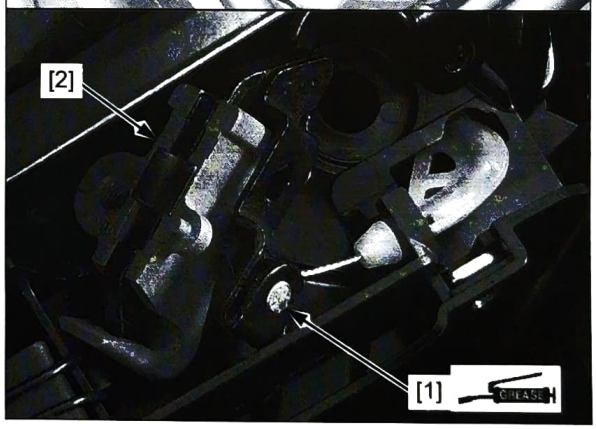

TOOL BOX

REMOVAL/INSTALLATION

Release the main seat (page 2-4).

Remove the trim clips [1], screws [2], and tool box [3].

Installation is in the reverse order of removal.

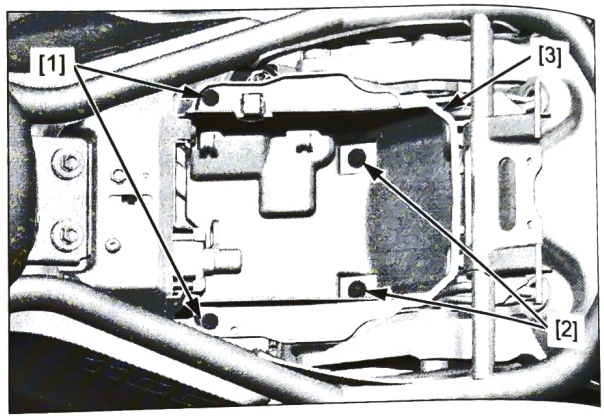

BATTERY CASE

REMOVAL/INSTALLATION

Remove the following:

- Rear wheel (page 18-5)
- Rear fender (page 2-8)
- Battery (page 21-5)
- Rear reservoir tank from battery case (page 19-5)

Release the following parts from the battery case:

- starter relay switch (page 6-9)
- SUB VB/FI relay (page 4-63)
- START/DCT relay (page 6-12)
- HIGH BEAM relay (page 22-29)
- harness clip [1]

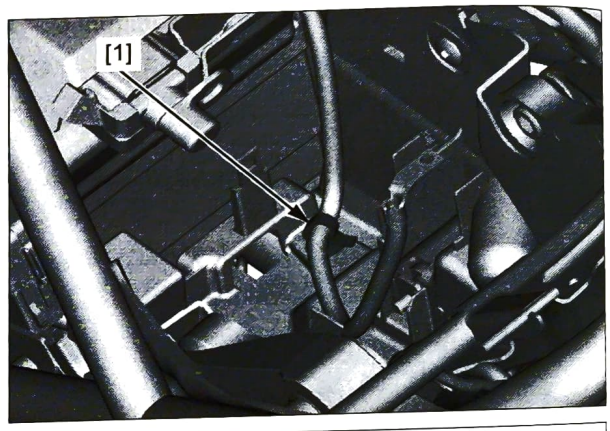

- Turn signal relay [1]
- Power box [2]

DCT type: Release the band [3] from the hooks [4]. Then pull out the TCM [5].

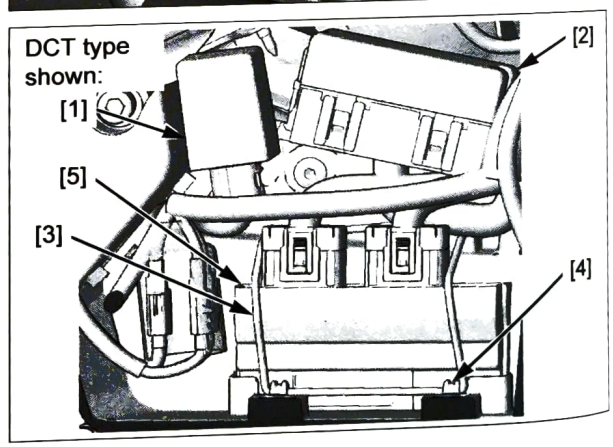

Remove the three clips [1].

Open the lid of the battery case.

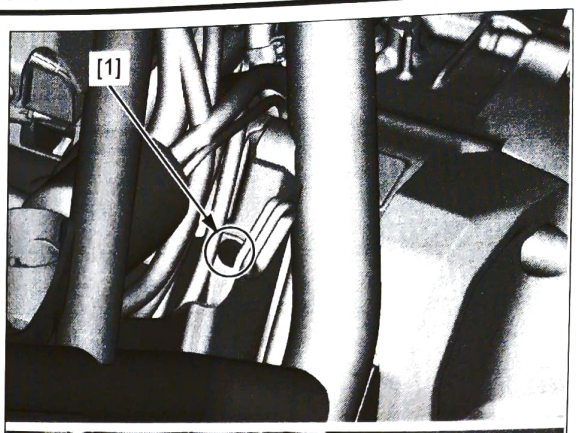

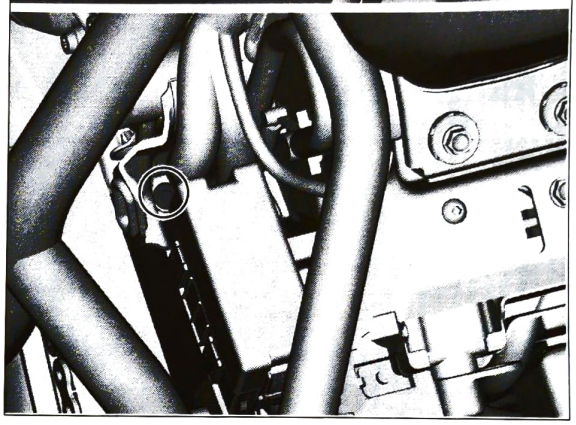

Remove the trim clips [1]. Then pull out the ECM [2] from the battery case.

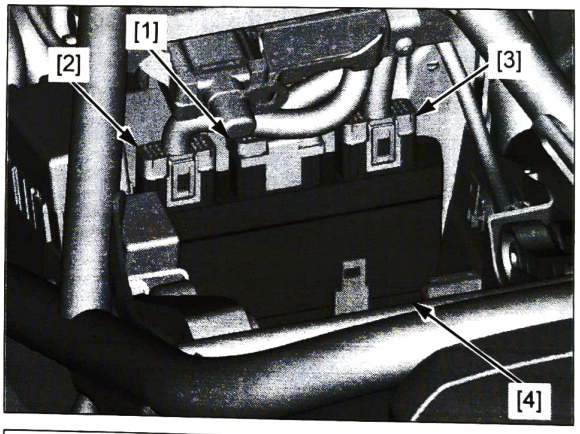

Disconnect the alternator 3P (Gray) connector [1] and regulator/rectifier 2P (Black) connector [2].

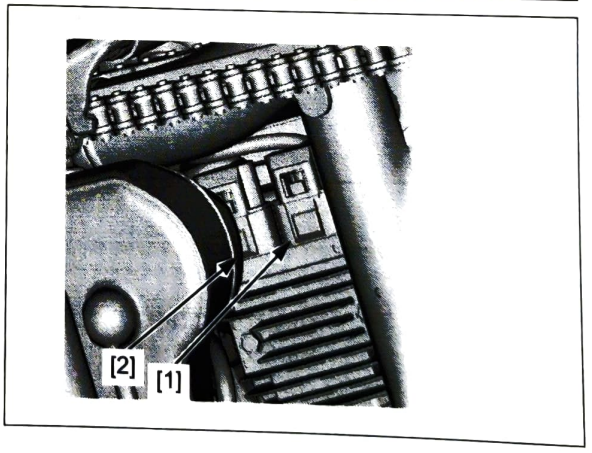

Remove the two socket bolts [1].

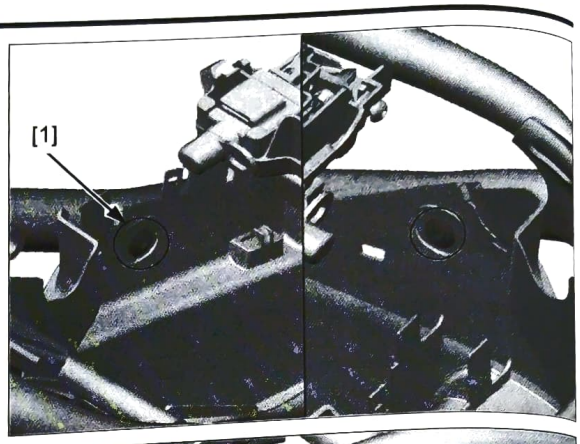

Remove the two socket bolts [1].

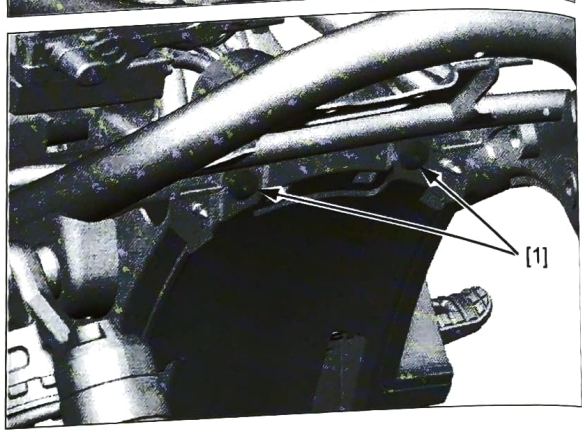

Remove the battery case [1] to the rear side as shown.

CM model shown:

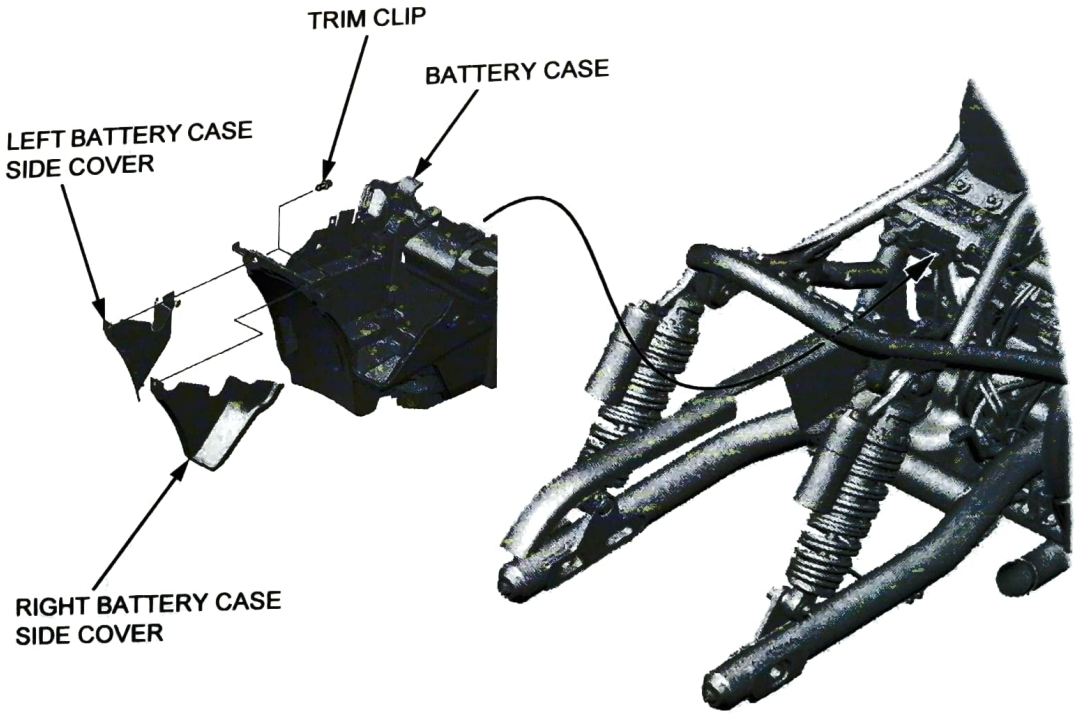

Installation is in the reverse order of removal.

CONNECTOR BOX

REMOVAL/INSTALLATION

Remove the following:

- Socket bolt [1]
- Screw [2]
- Bolt [3] and harness stay [4]

Release the connector box boss [5] from the top bridge [6].

Remove the Connector box [7].

Installation is in the reverse order of removal.

NOTE:

- Route the wires properly (page 1-27).

TORQUE: 1.0 N·m (0.1 kgf·m, 0.7 lbf·ft)

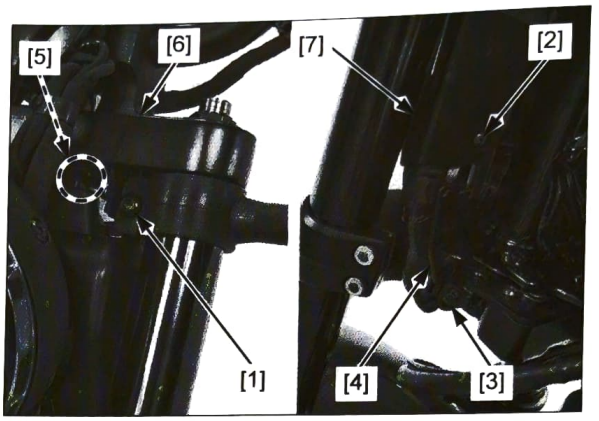

SIDESTAND

REMOVAL/INSTALLATION

Remove the sidestand switch from the sidestand pivot (page 22-24).

Retract the sidestand and remove the following:

- Spring [1]
- Pivot nut [2] and bolt [3]
- Sidestand [4]

Installation is in the reverse order of removal.

NOTE:

- Apply grease to the pivot area.
- After tightening the pivot bolt to the specified torque, turn it 45 – 90 ° counterclockwise.
- When tightening the pivot nut, hold the pivot bolt securely.
- The spring is installed in the direction as shown.

TORQUE:

Pivot bolt: 10 N·m (1.0 kgf·m, 7 lbf·ft)

Pivot nut: 29 N·m (3.0 kgf·m, 21 lbf·ft)

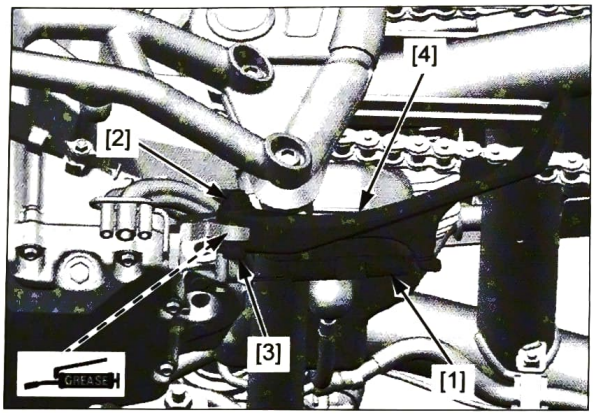

MUFFLER

REMOVAL/INSTALLATION

Loosen the muffler two band bolts [1].

Remove the following:

- Nut [2]
- Washer [3]
- Passenger step [4]
- Mounting rubber [5]
- Collar [6]
- Muffler [7]
- Gasket [8]

Be sure that the muffler band tab is aligned with the muffler groove in position.

Install a new gasket and the collar.

Install the muffler with the washer, bolt and nut, and loosely tighten it.

Tighten the muffler band bolt first, then tighten the mounting nut to the specified torque.

TORQUE:
Muffler band bolt: 22 N·m (2.2 kgf·m, 16 lbf·ft)

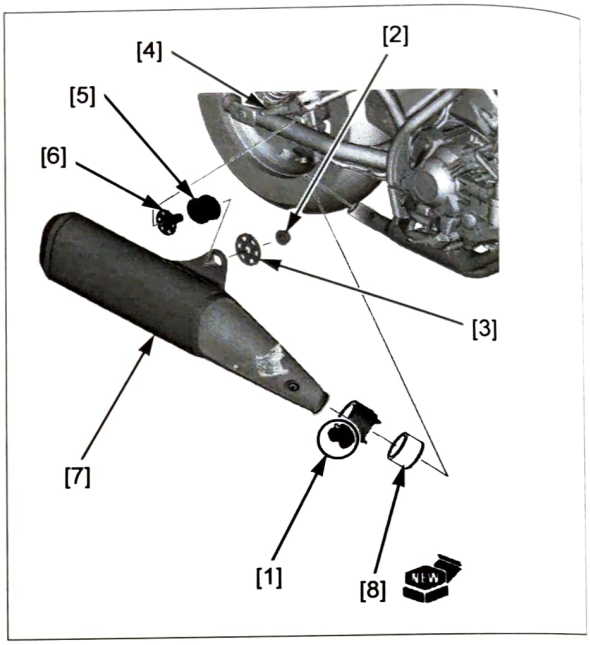

DISASSEMBLY/ASSEMBLY

Disassemble and assemble the muffler components as shown in the following illustration.

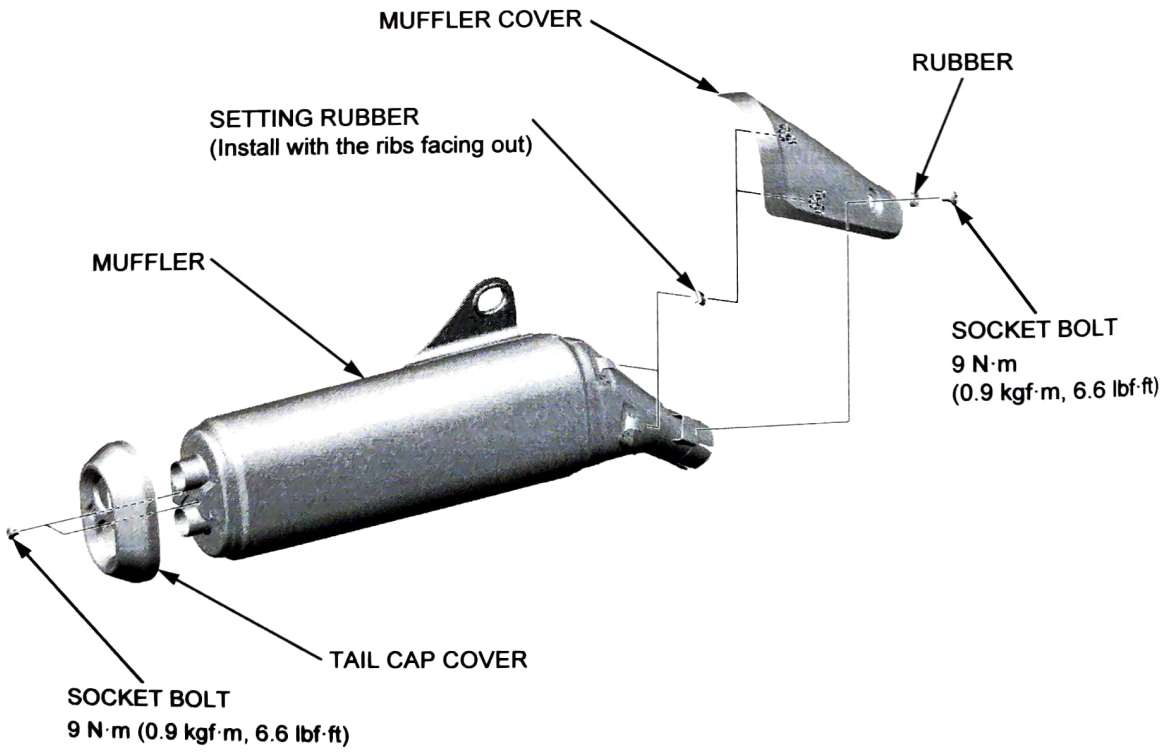

EXHAUST PIPE

REMOVAL/INSTALLATION

Disconnect the A/F sensor 4P (Black) connectors and remove the A/F sensor wires out of the frame (page 4-55).

Remove the following:

- Radiator (page 8-7)
- Muffler (page 2-16)
- Four joint nuts [1]
- Mounting bolt [2]
- Washer [3]
- Exhaust pipe [4]
- Collar [5]
- Mounting rubber [6]
- Gaskets [7]

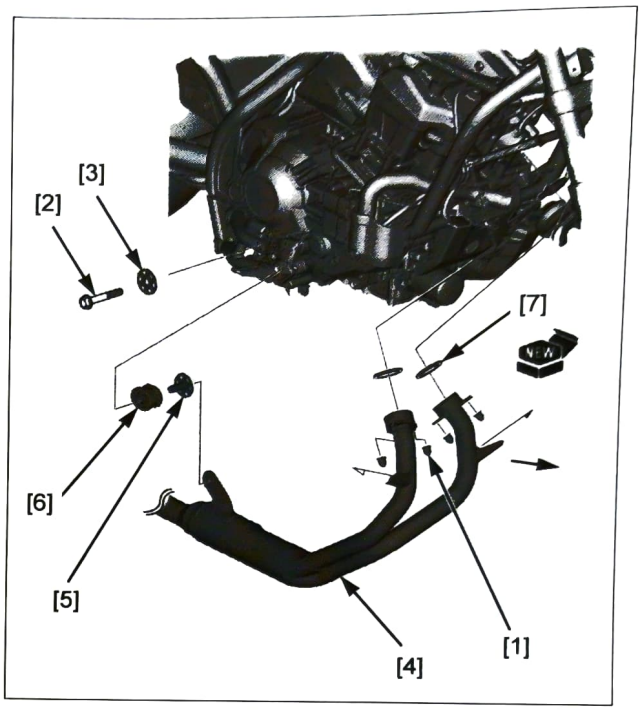

Be sure to verify the length from the stud bolt head to the cylinder head surface (page 2-17).

Install new gaskets, mounting rubber, and the collar.

Install the exhaust pipe with the washer, mounting bolt, and joint nuts by setting the exhaust pipe flanges onto the stud bolts, and screw all the fasteners in fully.

Tighten the joint nuts first to the specified torque, then tighten the mounting bolt.

TORQUE:

Exhaust pipe joint nut: 20 N·m (2.0 kgf·m, 15 lbf·ft)

Install the removed parts in the reverse order of removal.

STUD BOLT REPLACEMENT

Remove the exhaust pipe (page 2-17).

Thread two nuts onto the stud and tighten them together, and use a wrench on them to turn the stud bolt out.

Install new stud bolts into the cylinder head as shown.

After installing the stud bolts, check that the length from the bolt head to the cylinder head surface is within specification.

Install the exhaust pipe (page 2-17).

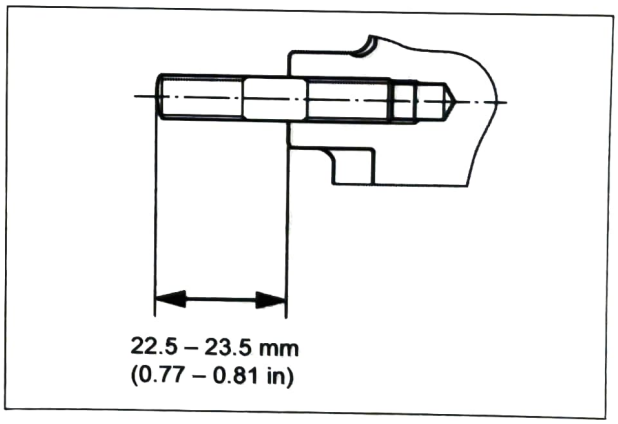

MEMO

SERVICE INFORMATION 3-2
MAINTENANCE SCHEDULE 3-3
FUEL LINE 3-4
THROTTLE OPERATION 3-4
AIR CLEANER 3-5
CRANKCASE BREATHER 3-5
SPARK PLUG 3-6
VALVE CLEARANCE 3-7
ENGINE OIL 3-12
ENGINE OIL FILTER 3-13
CLUTCH OIL FILTER (DCT type) 3-14
ENGINE IDLE SPEED 3-15
RADIATOR COOLANT 3-15
COOLING SYSTEM 3-16
SECONDARY AIR SUPPLY SYSTEM 3-16
EVAPORATIVE EMISSION CONTROL SYSTEM 3-16
DRIVE CHAIN 3-17
DRIVE CHAIN SLIDER 3-20
BRAKE FLUID 3-21
BRAKE PADS WEAR 3-21
BRAKE SYSTEM 3-22
BRAKE LOCK OPERATION (DCT type) 3-23
BRAKE LIGHT SWITCH 3-24
HEADLIGHT AIM 3-24
CLUTCH SYSTEM (MT type) 3-24
SIDESTAND 3-26
SUSPENSION 3-26
NUTS/BOLTS/FASTENERS 3-27
WHEELS/TIRES 3-27
STEERING HEAD BEARINGS 3-27

SERVICE INFORMATION

GENERAL

- Place the motorcycle on level surface before starting any work.
- Gasoline is extremely flammable and is explosive under certain conditions.
- Work in a well ventilated area. Smoking or allowing flames or sparks in the work area or where the gasoline is stored can cause a fire or explosion.
- The exhaust contains poisonous carbon monoxide gas that may cause loss of consciousness and may lead to death. Run the engine in an open area or with an exhaust evacuation system in an enclosed area.

TOOLS

Valve adjusting wrench 07708-0030400 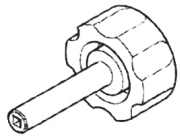 Not available in U.S.A.	Tappet adjuster wrench, 3 mm 07908-3290100 (U.S.A. only) 	Tappet lock nut wrench, 8 mm 07908-3290200 (U.S.A. only) 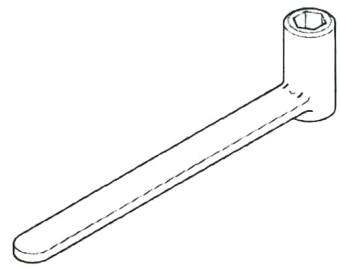
Oil filter wrench 07HAA-PJ70101 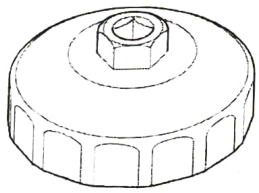 or 07AAA-PLCA100 (U.S.A. only)	Drive chain tool set 07HMH-MR10103 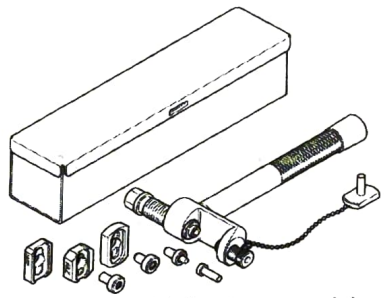 or 07HMH-MR1010C (U.S.A. only)	

MAINTENANCE SCHEDULE

Perform the Pre-ride inspection in the Owner's Manual at each scheduled maintenance period.

I: Inspect and Clean, Adjust, Lubricate or Replace if necessary. C: Clean. R: Replace. A: Adjust. L: Lubricate.

The following items require some mechanical knowledge. Certain items (particularly those marked * and **) may require more technical information and tools. Consult a dealer.

		ITEMS	FREQUENCY NOTE	ODOMETER READING (NOTE 1) x 1,000 mi	0.6	4	8	12	16	20	24	REGULAR REPLACE	REFER TO PAGE
				x 1,000 km	1.0	6.4	12.8	19.2	25.6	32.0	38.4		
EMISSION RELATED ITEMS	*	FUEL LINE					I		I		I		3-4
	*	THROTTLE OPERATION					I		I		I		3-4
		AIR CLEANER	NOTE 2					R			R		3-5
		CRANKCASE BREATHER	NOTE 3			C	C	C	C	C	C		3-5
	**	SPARK PLUG		EVERY 16,000 mi (25,600 km) I, EVERY 32,000 km (51,200 km) R									3-6
	**	VALVE CLEARANCE							I				3-7
		ENGINE OIL			R		R		R		R	1 year	3-12
		ENGINE OIL FILTER			R				R				3-13
		CLUTCH OIL FILTER	NOTE 6		R				R				3-14
	*	ENGINE IDLE SPEED					I		I		I		3-15
		RADIATOR COOLANT	NOTE 5				I		I		I	3 years	3-15
	*	COOLING SYSTEM					I		I		I		3-16
	*	SECONDARY AIR SUPPLY SYSTEM							I				3-16
	*	EVAPORATIVE EMISSION CONTROL SYSTEM	NOTE 4						I				3-16
NON-EMISSION RELATED ITEMS		DRIVE CHAIN		EVERY 600 mi (1,000 km) I, L									3-17
		BRAKE FLUID	NOTE 5			I	I	I	I	I	I	2 years	3-21
		BRAKE PAD WEAR				I	I	I	I	I	I		3-21
		BRAKE SYSTEM					I		I		I		3-22
		BRAKE LIGHT SWITCH					I		I		I		3-24
	*	BRAKE LOCK OPERATION	NOTE 6			I	I	I	I	I	I		3-23
		HEADLIGHT AIM					I		I		I		3-24
		CLUTCH SYSTEM	NOTE 7			I	I	I	I	I	I		3-24
		SIDESTAND					I		I		I		3-26
	*	SUSPENSION					I		I		I		3-26
	*	NUTS, BOLTS, FASTENERS					I		I		I		3-27
	**	WHEELS/TIRES					I		I		I		3-27
	**	STEERING HEAD BEARINGS					I		I		I		3-27

* Should be serviced by a dealer, unless the owner has proper tools and service data and is mechanically qualified.

** In the interest of safety, we recommend these items be serviced only by a dealer.

Honda recommends that a dealer should road test your motorcycle after each periodic maintenance is carried out.

NOTES:

1. At higher odometer readings, repeat at the frequency interval established here.
2. Service more frequently when riding in unusually wet or dusty areas.
3. Service more frequently when riding in rain or at full throttle.
4. 50-State (meets California)
5. Replacement requires mechanical skill.
6. DCT type only
7. MT Type only

FUEL LINE

FUEL TANK LIFTING/LOWERING

Remove the main seat (page 2-4).

Remove the fuel tank cover [1].

Remove the fuel tank mounting bolt [2] and color [3].

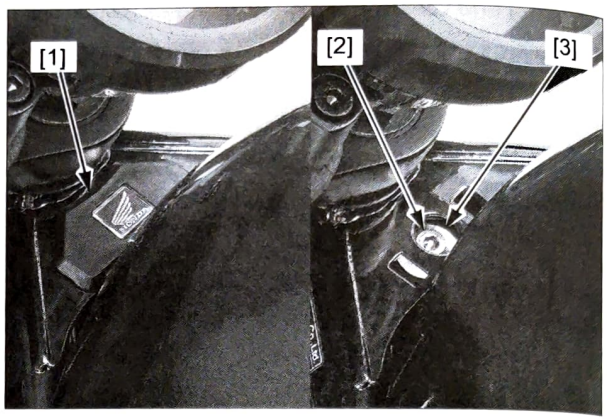

Remove the fuel tank mounting bolts [1] and colors [2].

Disconnect the following connectors:

- fuel pump 3P (Black) [3]
- fuel unit 2P (Black) [4]

Lift the fuel tank [5].

Install the fuel tank grommet [6] into the frame boss [7]. Temporarily install the bolt and washer.

Support the fuel tank using a suitable support.

Install the removed parts in the reverse order of removal.

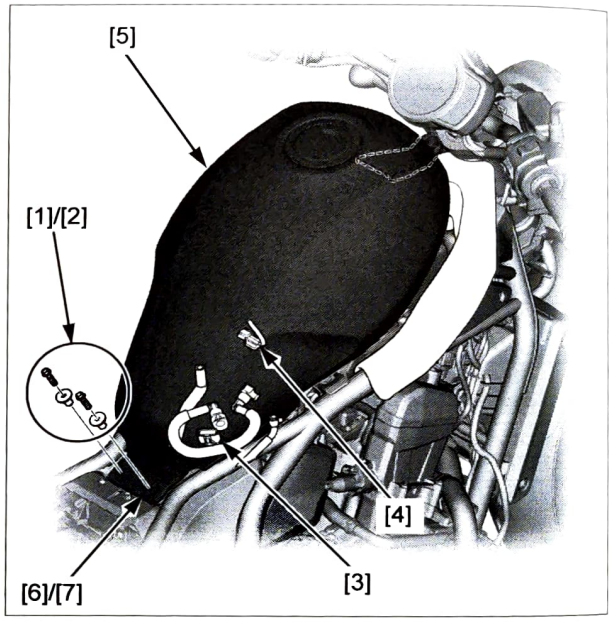

INSPECTION

Lift the fuel tank and support it (page 3-4).

Check the fuel feed hose for deterioration, damage or leakage.

Also, check the hose fittings for damage or looseness.

Replace the fuel feed hose if necessary.

THROTTLE OPERATION

Check for smooth operation of the throttle grip [1] and that it returns automatically to the fully closed position from any open position.
Replace the right handlebar switch if the throttle operation is not smooth (page 22-20).

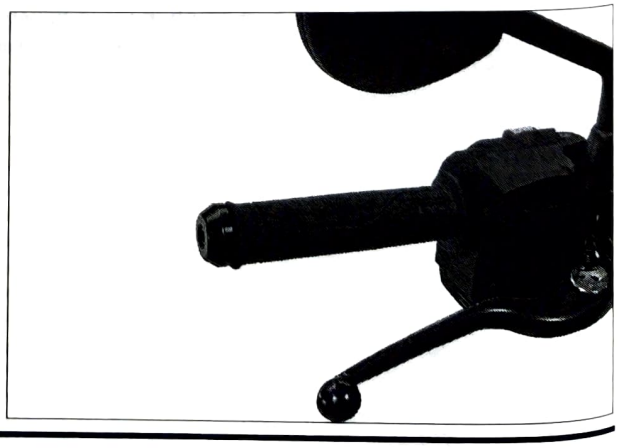

AIR CLEANER

REMOVAL/INSTALLATION

NOTE:

- The viscous paper element type air cleaner cannot be cleaned because the element contains a dust adhesive.
- If the motorcycle is used in unusually wet or dusty areas, more frequent inspections are required.

Remove the following:

- fuel tank (page 7-6)
- tapping screws [1]
- air cleaner housing cover [2]

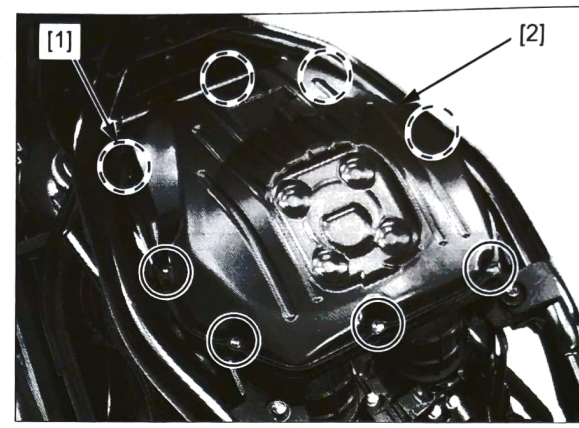

Remove the following:

- tapping screws [1]
- air cleaner element [2]

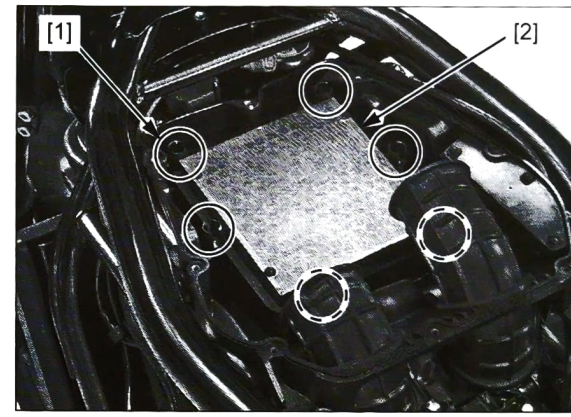

Installation is in the reverse order of removal.

TORQUE:

Air cleaner element mounting screw:
1.1 N·m (0.1 kgf·m, 0.8 lbf·ft)

Air cleaner cover screw:
1.1 N·m (0.1 kgf·m, 0.8 lbf·ft)

CRANKCASE BREATHER

NOTE:

- Service more frequently when ridden in rain, at full throttle, or after the motorcycle is washed or overturned. Service if the deposit level can be seen in the transparent tube.

Remove the crankcase breather tube plug [1] and drain the deposits into a suitable container, then reinstall the plug securely.

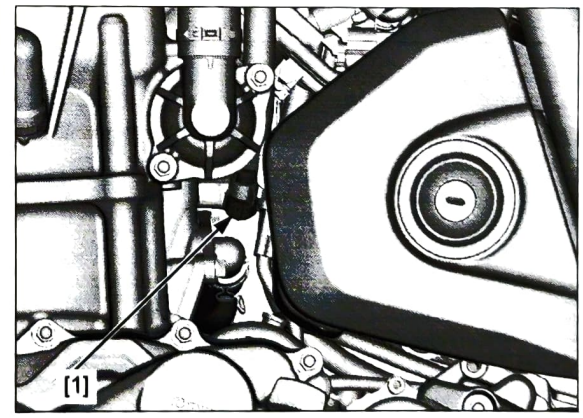

SPARK PLUG

REMOVAL/INSTALLATION

NOTE:

- Clean around the spark plug base with compressed air before removing the spark plug, and be sure that no debris is allowed to enter the combustion chamber.

Remove the air cleaner housing (page 7-10).

Remove the No.1-2 plug [1] using the equipped spark plug wrench.

Remove the No.2-2 plug in the same manner.

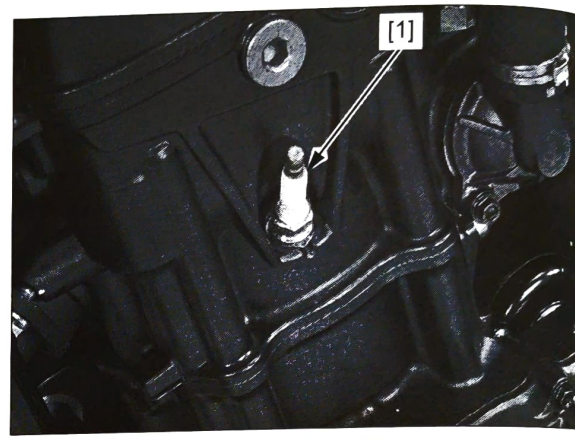

Remove the No.1-1 plug using the equipped spark plug wrench [1].

Remove the No.2-1 plug in the same manner.



Inspect or replace the spark plugs as described in the MAINTENANCE SCHEDULE (page 3-3).
Install and hand tighten the spark plug to the cylinder head, then tighten the spark plug to the specified torque using the spark plug wrench.

TORQUE:
Spark plug:
22 N·m (2.2 kgf·m, 16 lbf·ft)

NOTE:

- Replace new spark plugs as a set.

Installation is in the reverse order of removal.

INSPECTION

Check the following and replace the spark plug if necessary.

- Insulator [1] for damage
- Center electrode [2] and side electrode [3] for wear
- Coloration or burning condition

NOTE:

- This motorcycle's spark plugs are equipped with an iridium center electrode. Do not clean the electrodes.

If the electrodes are contaminated with accumulated objects or dirt, replace the spark plug.

SPECIFIED SPARK PLUG: SILMAR8A9S (NGK)

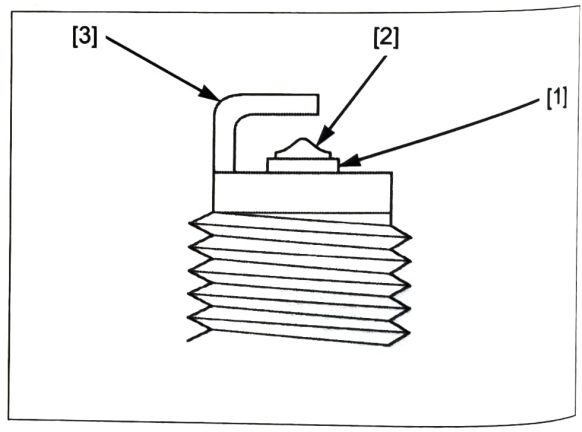

Check the gap between the center and side electrodes with a wire type feeler gauge [1].

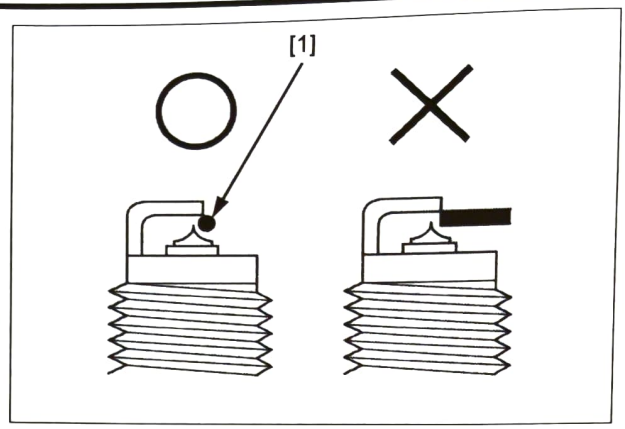

NOTE:

- To prevent damaging the iridium center electrode, use a wire type feeler gauge to check the spark plug gap.

Make sure that the Φ 1.0 mm (0.04 in) plug gauge can not be inserted between the gap.

NOTE:

- Do not adjust the spark plug gap. If the gap is out of specification, replace it with a new one.

VALVE CLEARANCE

NOTE:

- Inspect and adjust the valve clearance while the engine is cold (below 35°/95°F).

Remove the cylinder head cover (page 10-5).

Remove the crankshaft hole cap [1] and the timing hole cap [2].



Turn the crankshaft counterclockwise and align the "T1" mark [1] on the flywheel with the index mark [2] of the alternator cover.

Make sure that the index lines [3] on the cam sprocket align with the upper surface of the cylinder head and the punch mark [4] on the sprocket is visible.

If the punch mark is not visible, rotate the crankshaft counterclockwise on full turn and realign the "T1" mark with the index mark.

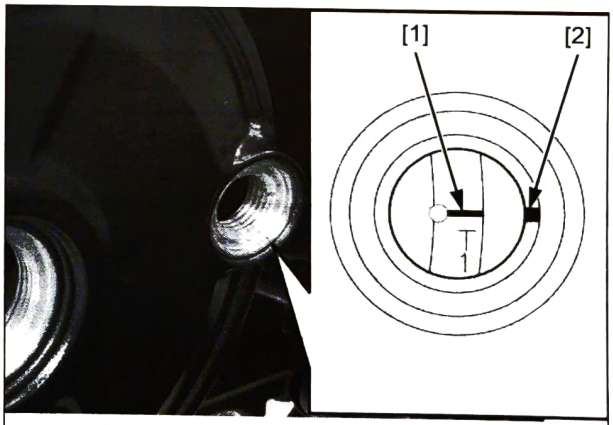

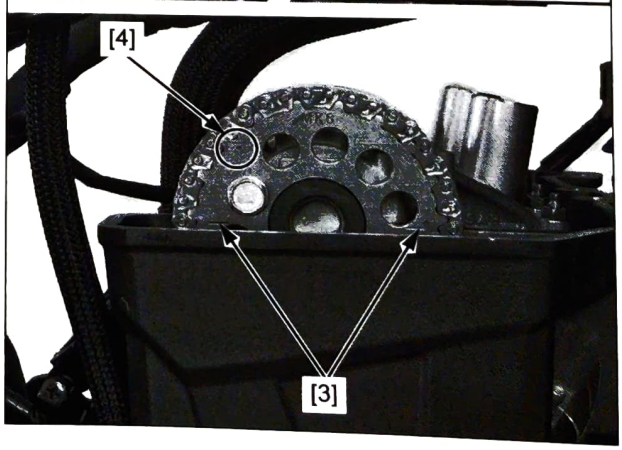

Check the No.1 cylinder intake valve clearances by inserting a feeler gauge [1] between the valve lifter and cam lobe (page 1-6).

Adjust the valve clearance by changing the valve lifter shim (page 10-11).

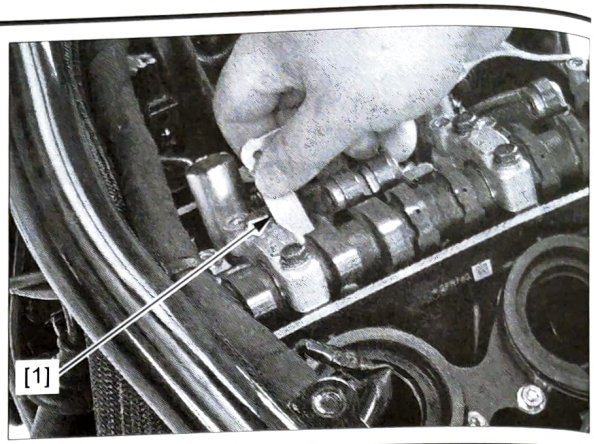

Turn the crankshaft counterclockwise 270° and align the "T2" mark [1] on the flywheel with the index mark [2] of the alternator cover.

Make sure that the punch mark [3] on the cam sprocket aligns with the upper surface of the cylinder head as shown.

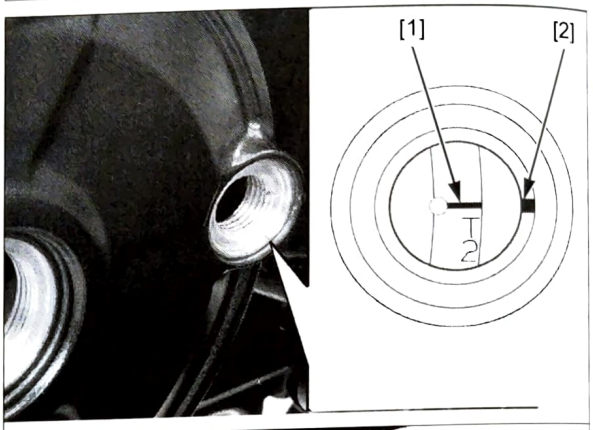

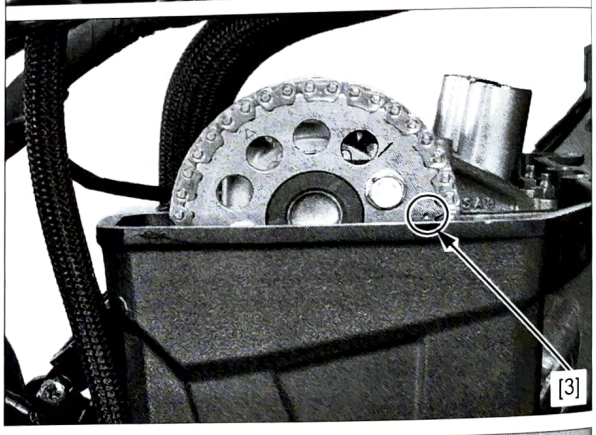

Check the No.2 cylinder intake valve clearances by inserting a feeler gauge [1] between the valve lifter and cam lobe (page 1-6).

Adjust the valve clearance by changing the valve lifter shim (page 10-11).

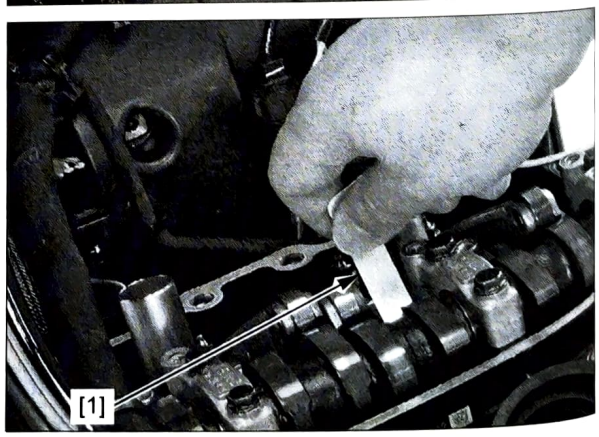

Check the No.2 cylinder exhaust valve clearances by inserting a feeler gauge [1] between the rocker arm roller and cam lobe (page 1-6).

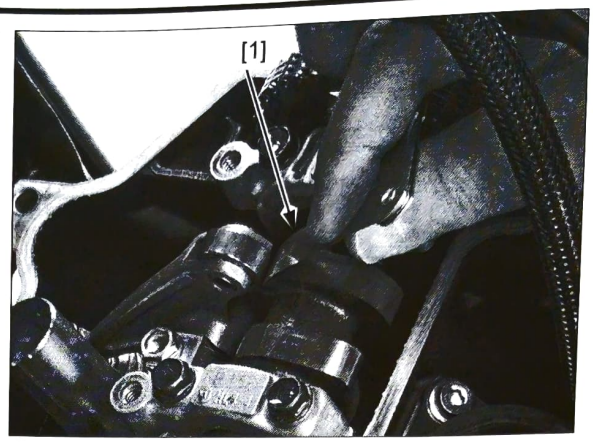

Adjust the No.2 cylinder exhaust valve clearance by loosening the lock nut [1] and turning the adjusting screw [2] until there is a slight drag on the feeler gauge [3].

TOOL:

Valve adjusting wrench [4]	**07708-0030400**

U.S.A. TOOLS:

Tappet adjuster wrench, 3 mm	**07908-3290100**
Tappet lock nut wrench, 8 mm	**07908-3290200**

Apply engine oil to the adjusting screw and lock nut threads and seating surface.

Hold the adjusting screw and tighten the lock nut.

TORQUE: 10 N·m (1.0 kgf·m, 7 lbf·ft)

After tightening the lock nut, recheck the valve clearance.

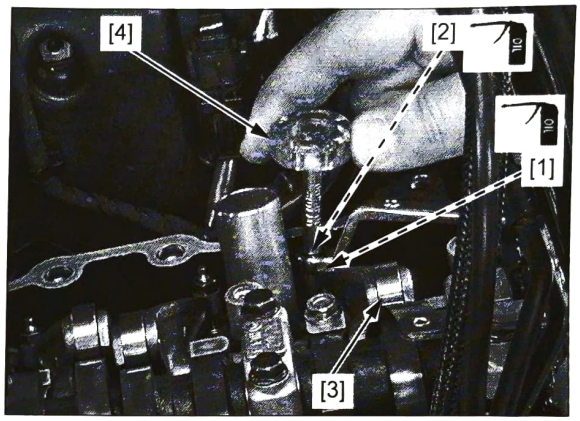

Rotate the crankshaft counterclockwise approximately 252.5° and align the "E1" mark [1] with the index mark [2].

Make sure that the "△" mark [3] on the cam sprocket align with the upper surface of the cylinder head as shown.

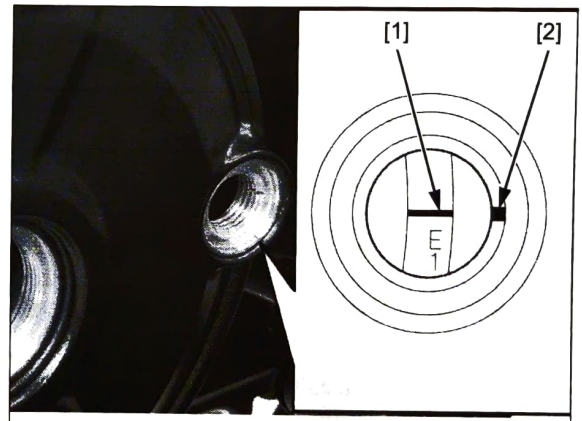

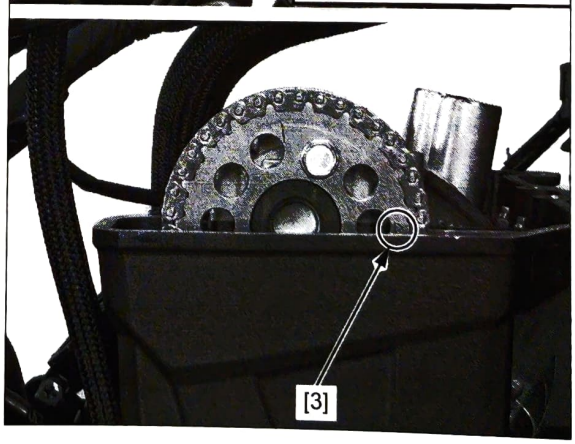

Check the No.1 cylinder exhaust valve clearances by inserting a feeler gauge [1] between the locker arm roller and cam lobe (page 1-6).

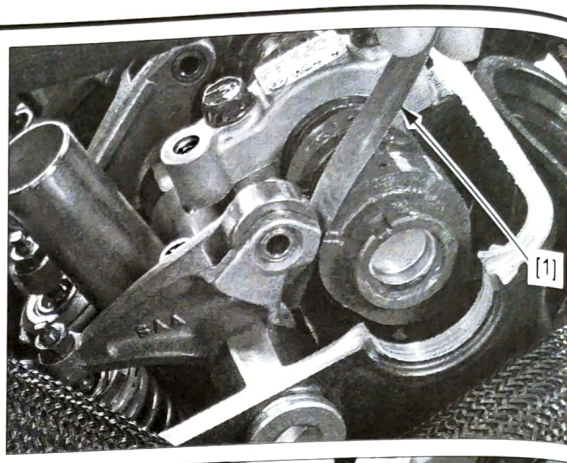

Adjust the No.1 cylinder exhaust valve clearance by loosening the lock nut [1] and turning the adjusting screw [2] until there is a slight drag on the feeler gauge [3].

TOOL:
Valve adjusting wrench [4] **07708-0030400**

U.S.A. TOOLS:
Tappet adjuster wrench, 3 mm **07908-3290100**
Tappet lock nut wrench, 8 mm **07908-3290200**

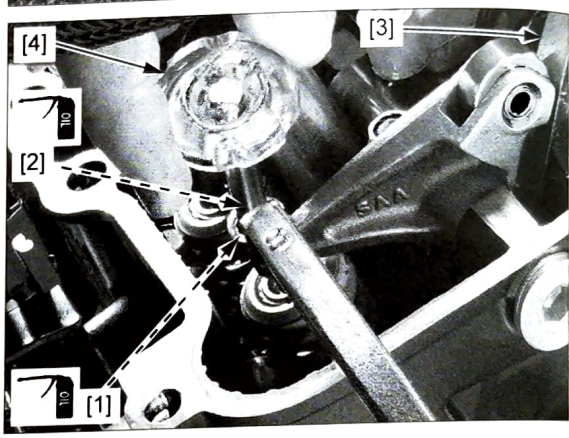

Apply engine oil to the adjusting screw and lock nut threads and seating surface.

Hold the adjusting screw and tighten the lock nut.

TORQUE: 10 N·m (1.0 kgf·m, 7 lbf·ft)

After tightening the lock nut, recheck the valve clearance.

Coat new O-rings [1] with engine oil and install them into the timing hole cap [2] and crankshaft hole cap [3].

Apply grease to the threads of the timing hole and crankshaft hole caps.

Install the timing hole and crankshaft hole caps, and tighten them.

TORQUE:
Timing hole cap:
6.0 N·m (0.6 kgf·m, 4.4 lbf·ft)
Crankshaft hole cap:
8.0 N·m (0.8 kgf·m, 5.9 lbf·ft)

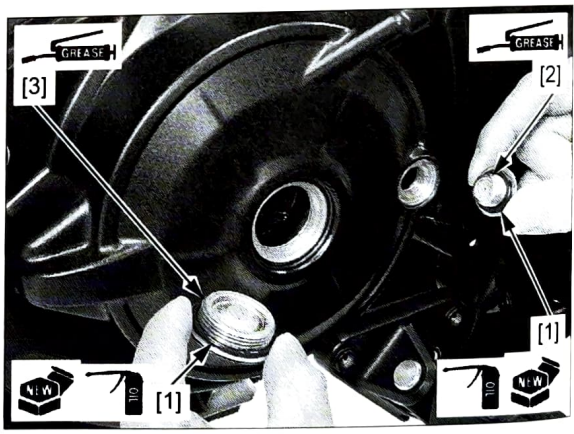

Install the cylinder head cover (page 10-5).

INTAKE VALVE CLEARANCE ADJUSTMENT

Remove the valve lifter and shim (page 10-11).

Clean the valve shim contact area in the valve lifter [1] with compressed air.

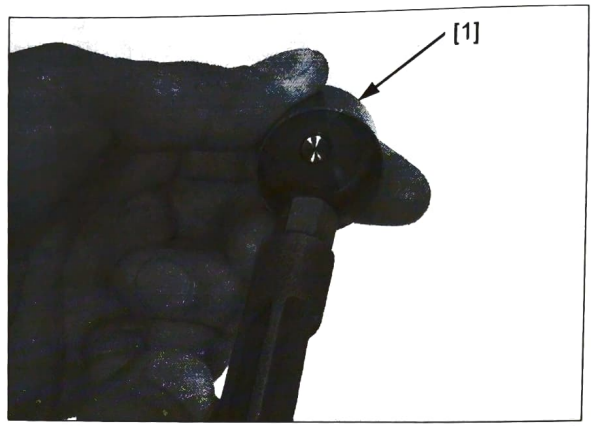

Measure the shim [1] thickness and record it.

NOTE:

- Fifty-one different shim thicknesses are available in increments of 0.025 mm (from 1.200 mm to 2.450 mm).

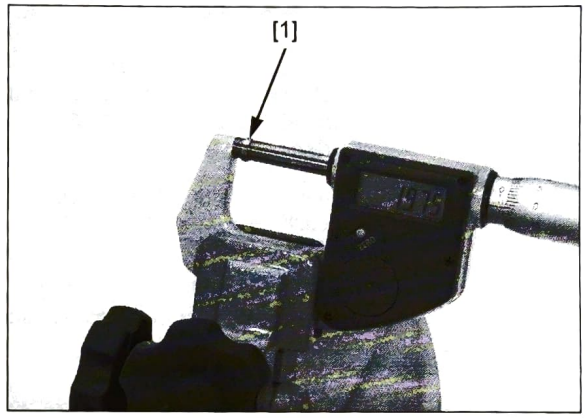

Calculate the new shim thickness using the equation below.
A = (B – C) + D
A: New shim thickness
B: Recorded valve clearance
C: Specified valve clearance
D: Old shim thickness

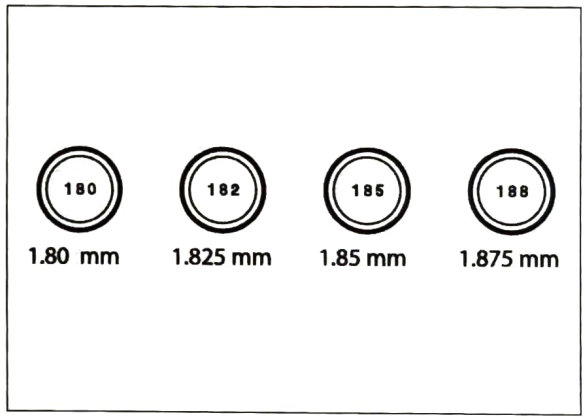

NOTE:

- Make sure of the correct shim thickness by measuring the shim with the micrometer.
- Reface the valve seat if carbon deposits result in a calculated dimension of over 2.450 mm.

Install newly selected shims on the valve retainers.

Install the valve lifter and camshaft (page 10-11).

Rotate the crankshaft counterclockwise several times and recheck the valve clearances.

ENGINE OIL

OIL LEVEL INSPECTION

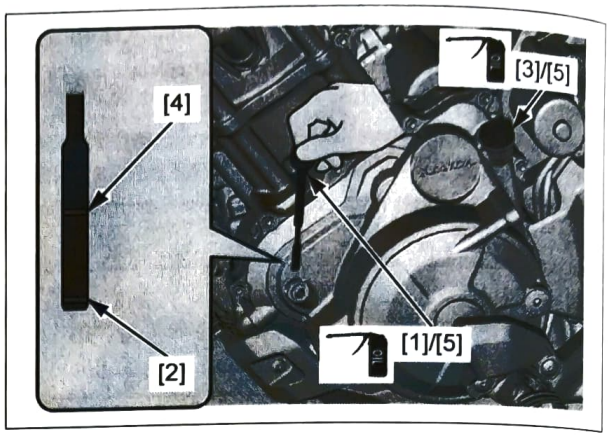

Place the motorcycle on its sidestand.
Start the engine and let it idle for 3 – 5 minutes.
Stop the engine and wait 2 – 3 minutes.

Remove the dipstick [1] and wipe it clean.

Place the motorcycle on a level surface, and support it in an upright position.

Insert the dipstick until it seats, but do not screw it in.
Check that the oil level is between the upper and lower level lines on the dipstick.

If the level is below the lower level line [2], remove the oil filler cap [3] and fill the crankcase with the recommended oil up to the upper level line [4].

RECOMMENDED ENGINE OIL:
Pro Honda GN4 4-stroke oil (U.S.A. & Canada) or equivalent motorcycle oil.
API service classification: SJ or higher
JASO T903 standard: MA
Viscosity: SAE 10W-30

Check that the O-rings [5] of the oil filler cap and dipstick are in good condition, and replace them if necessary.

Apply engine oil to the O-rings.
Install the oil filler cap and dipstick.

ENGINE OIL CHANGE

Warm up the engine.
Stop the engine and remove the oil filler cap and dipstick.
Place an oil pan under the engine to catch the engine oil, then remove the engine oil drain bolts [1] and sealing washers [2].
Drain the engine oil completely.

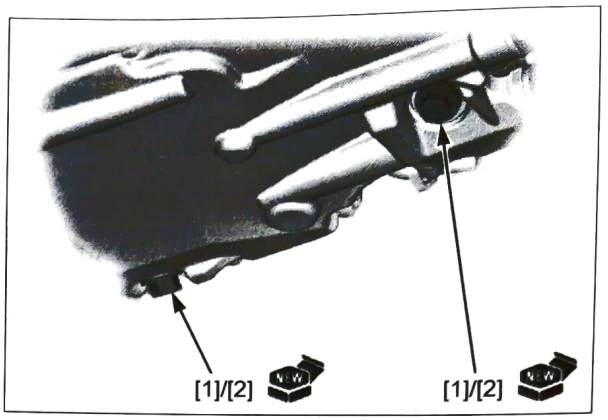

NOTE:

- Be sure to drain the engine oil from both drain holes.

Clean the drain bolts and install new sealing washers onto the drain bolts.
Install and tighten the drain bolts to the specified torque.

TORQUE: 30 N·m (3.1 kgf·m, 22 lbf·ft)

Fill the engine with the recommended engine oil (page 3-12).

ENGINE OIL CAPACITY:

MT type:

3.9 liters (4.1 US qt, 3.4 Imp qt) at draining
4.0 liters (4.2 US qt, 3.5 Imp qt) at oil filter change
4.8 liters (5.1 US qt, 4.2 Imp qt) at disassembly

DCT type:

4.0 liters (4.2 US qt, 3.5 Imp qt) at draining
4.2 liters (4.4 US qt, 3.7 Imp qt) at oil filter change
5.2 liters (5.5 US qt, 4.6 Imp qt) at disassembly

Check the engine oil level (page 3-12).
Make sure that there are no oil leaks.

ENGINE OIL FILTER

Drain the engine oil (page 3-12).

Remove the oil filter cartridge [1] using the special tool.

TOOL:

[2] Oil filter wrench — **07HAA-PJ70101 or 07AMA-MFJA100 (U.S.A. only)**

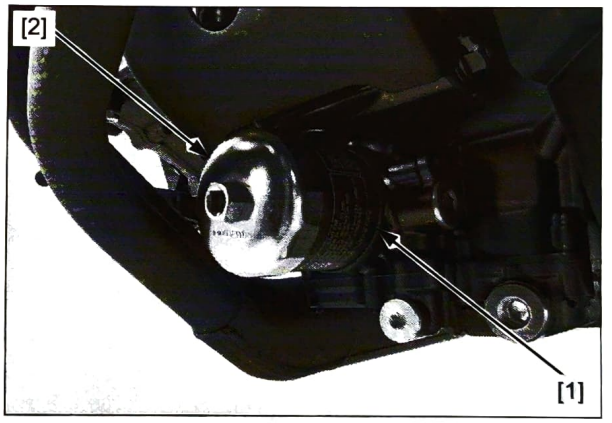

Check that the oil filter boss protrusion from the crankcase is specified length as shown.

SPECIFIED LENGTH: 15.5 – 16.5 mm (0.61 – 0.65 in)

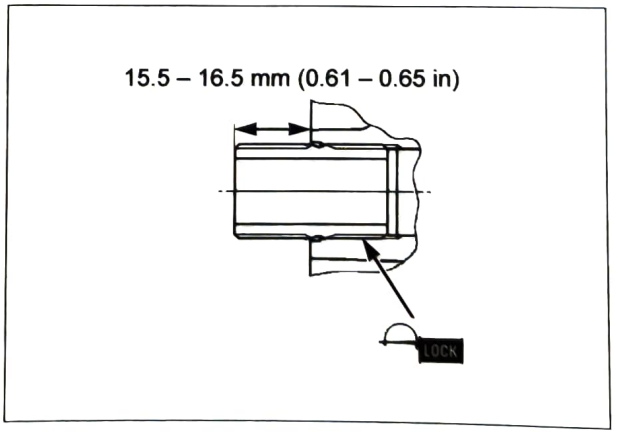

NOTE:

- If the oil filter boss is removed, apply locking agent to the oil filter boss threads and install it (page 3-13).

Apply engine oil to the threads and O-ring of a new oil filter cartridge [1].

Install the oil filter cartridge and tighten it to the specified torque.

TOOL:

[1] Oil filter wrench	**07HAA-PJ70101 or 07AMA-MFJA100 (U.S.A. only)**

TORQUE: 26 N·m (2.7 kgf·m, 19 lbf·ft)

Fill the crankcase with the recommended engine oil (page 3-12).

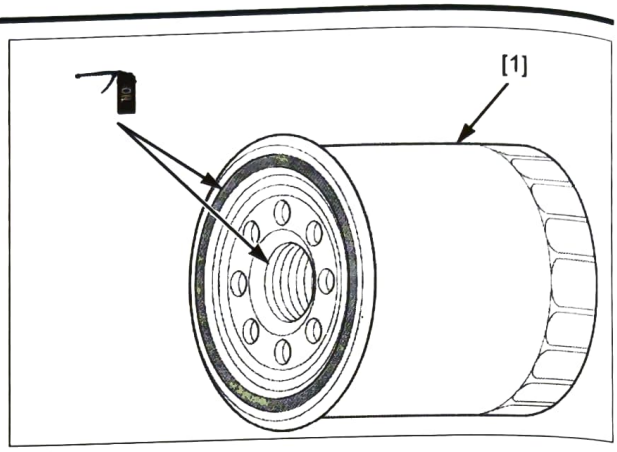

CLUTCH OIL FILTER (DCT type)

NOTE:

- Replace the engine oil filter when the clutch oil filter is replaced.

NOTICE

Ensure the model-specific engine oil filter is used. Filters with a similar physical appearance may have different flow characteristics. The use of such filters could cause severe engine damage.

Drain the engine oil (page 3-12).

Remove the following:

- Bolts [1]
- Clutch oil filter cover [2]
- O-ring [3]
- Spring [4]
- Clutch oil filter [5]

Install a new clutch oil filter with the "OUT SIDE" mark [6] facing outside.

NOTE:

- Installing the oil filter backwards will result in severe engine damage.

Apply engine oil to a new O-ring and install it to the oil filter cover.
Install the spring and oil filter cover.
Tighten the bolts to the specified torque.

TORQUE: 12 N·m (1.2 kgf·m, 9 lbf·ft)

Fill the crankcase with the recommended engine oil and check that there are no oil leaks (page 3-12).

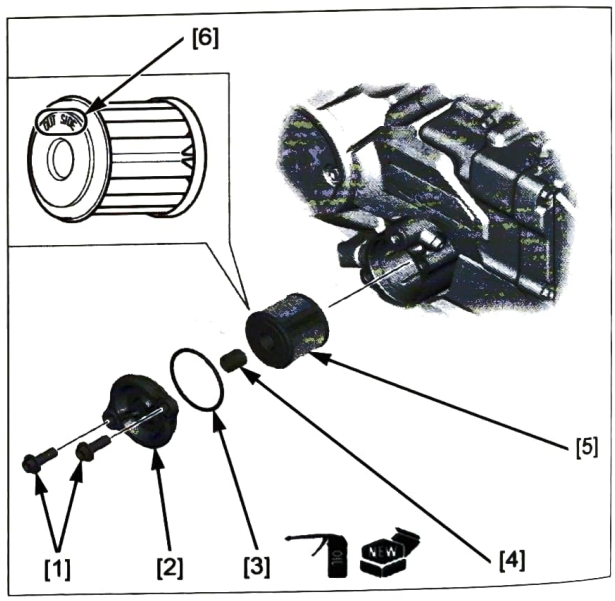

ENGINE IDLE SPEED

IDLE SPEED INSPECTION

- The engine must be warm for accurate idle speed inspection.
- This system eliminates the need for manual idle speed adjustment compared to previous designs.

Start the engine and warm it up until the coolant temperature rises to 80°C (176°F).
Stop the engine and connect a tachometer according to the tachometer manufacturer's operating instructions.
Start the engine and let it idle. Check the idle speed.

ENGINE IDLE SPEED:
1,250 ± 100 rpm

If the idle speed is out of the specification, check the intake air leak or engine top-end problem (page 10-3).

RADIATOR COOLANT

Check the coolant level of the reserve tank with the engine running at normal operating temperature.

The level should be between the "UPPER" [1] and "LOWER" [2] level lines with the motorcycle in an upright position on a level surface.

If the level is low, fill as follows.

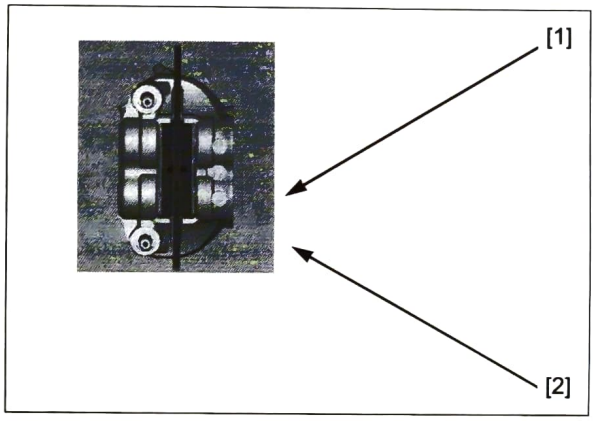

Remove the reserve tank cap [1] and fill the tank to the "UPPER" level line with the recommended coolant.

RECOMMENDED ANTIFREEZE:
Pro Honda HP Coolant or an equivalent high quality ethylene glycol antifreeze containing corrosion protection inhibitors



Check to see if there are any coolant leaks when the coolant level decreases very rapidly.

If the reserve tank becomes completely empty, there is a possibility of air getting into the cooling system.
Be sure to remove any air from the cooling system (page 8-5).

Install the reserve tank cap.

COOLING SYSTEM

Check the radiator air passages for clogging or damage.
Straighten bent fins with a small flat blade screwdriver and remove insects, mud or other obstructions with compressed air or low water pressure.
Replace the radiator if the air flow is restricted over more than 20% of the radiating surface.

Check for any coolant leakage from the water hoses and hose joints.
Check the water hoses for cracks or deterioration and replace them if necessary.
Check that all hose clamps are tight.

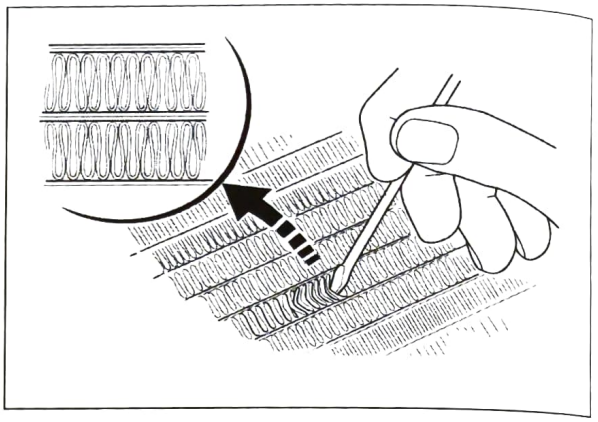

SECONDARY AIR SUPPLY SYSTEM

Remove the fuel tank (page 7-6).

Check the air supply hoses [1] between the air cleaner housing, PAIR control solenoid valve [2] and cylinder head cover for deterioration, damage or loose connections.

Also, check that the hoses are not kinked or pinched.

If the air supply hose show any signs of heat damage, inspect the PAIR check valves (page 7-16).

For secondary air supply system inspection (page 7-14).

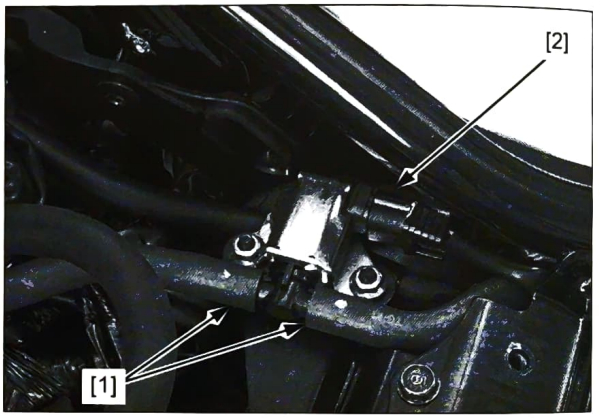

EVAPORATIVE EMISSION CONTROL SYSTEM

Open the fuel filler cap.

Check the breather seal [1] in the fuel filler cap [2] for deterioration, cracks or damage. Replace it if necessary.

NOTE:

- Always replace the breather seal with a new one when the fuel filler cap is removed for service.

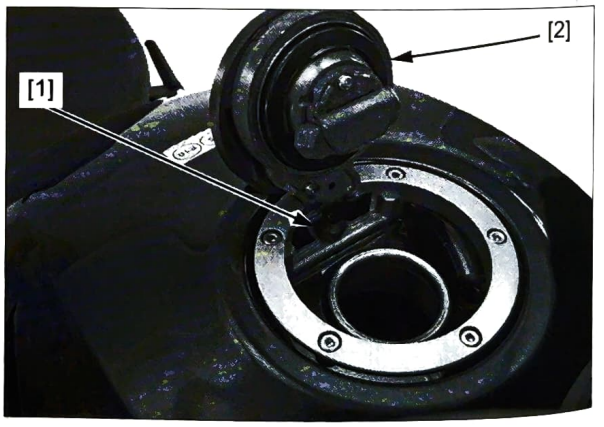

Remove the EVAP canister (page 7-18).

Check the EVAP canister [1] for clacks or damage.

Check the hoses between the fuel tank [2], EVAP canister, EVAP purge control solenoid valve [3] and throttle body [4] for deterioration, damage or loose connections.

Also, check that the hoses are not kinked or pinched.

Refer to the Cable & Harness Routing for hose connections and routing (page 1-27).

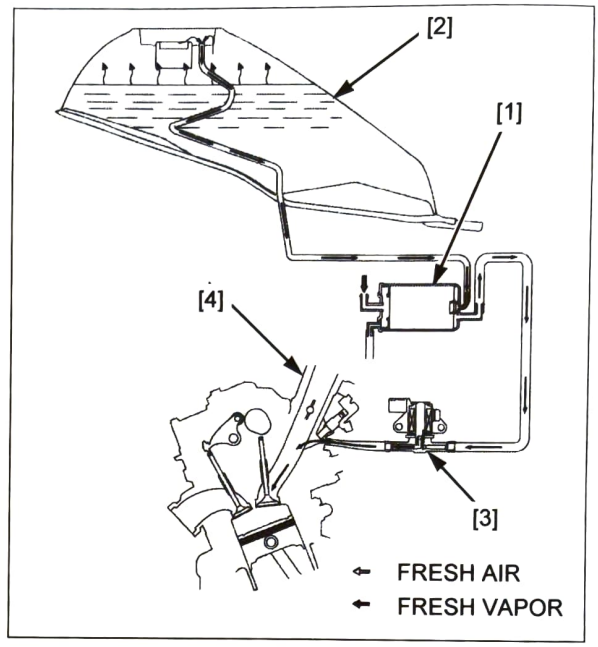

DRIVE CHAIN

DRIVE CHAIN SLACK INSPECTION

Never inspect and adjust the drive chain while the engine is running.

Turn the ignition switch OFF.

Place the motorcycle on its sidestand and shift the transmission into neutral.

Check the slack in the drive chain lower run midway between the sprockets.

DRIVE CHAIN SLACK: 15 – 25 mm (9/16 – 1 in)

NOTICE

Excessive chain slack, 50 mm (1-15/16 in) or more, may damage the frame.

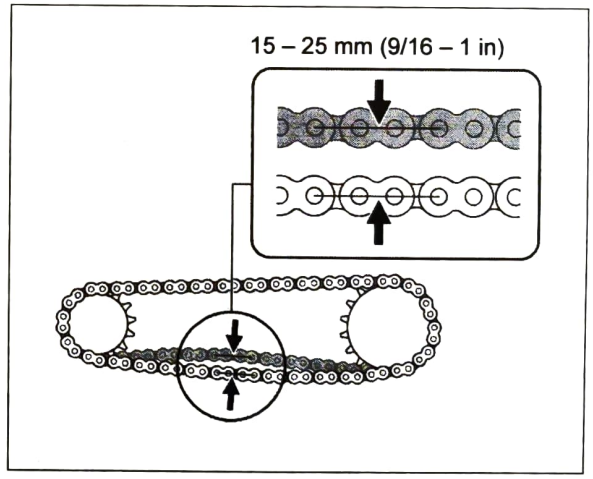

ADJUSTMENT

Loosen the rear axle nut [1] and adjuster lock nuts [2].

Turn the adjusting bolts [3] an equal number of a turn until the correct drive chain slack is obtained.

A scale is included on the adjusters. Be sure the reading on the scale is same for both sides.

Tighten each lock nut while holding the adjusting bolt to the specified torque.

TORQUE: 21 N·m (2.1 kgf·m, 15 lbf·ft)

Tighten the axle nut to the specified torque.

TORQUE: 100 N·m (10.2 kgf·m, 74 lbf·ft)

Recheck the drive chain slack and free wheel rotation.

Check the drive chain wear indicator label attached on the left swingarm.

If the index line [4] on left setting plate reaches the red zone [5] of the wear indicator label, replace the drive chain with a new one (page 3-17).

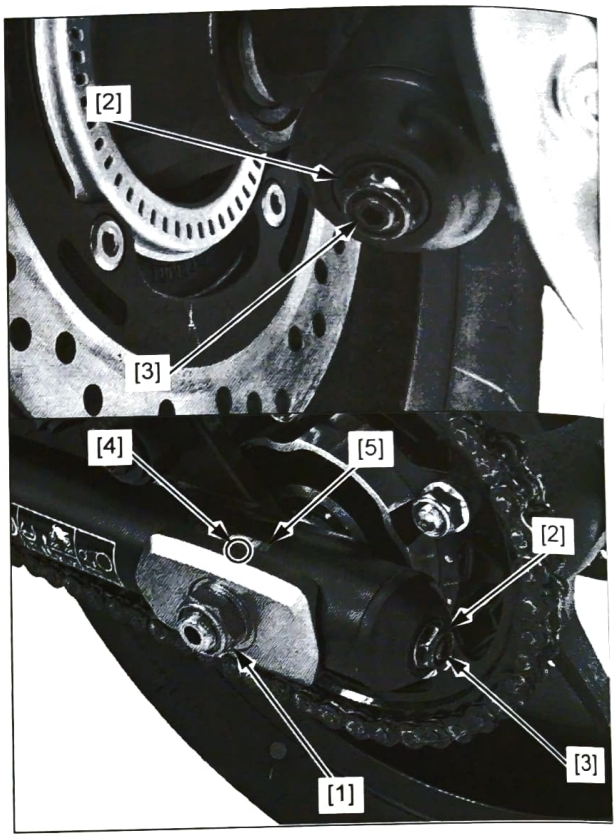

CLEANING AND LUBRICATION

Clean the drive chain [1] with a chain cleaner designed specifically for O-ring chains or a neutral detergent. Use a soft brush if the drive chain is dirty.

NOTICE

Do not use a steam cleaner, high pressure cleaner, wire brush, volatile solvent such as gasoline and benzene, abrasive cleaner or a chain cleaner NOT designed specifically for O-ring chains to clean the drive chain.

Inspect the drive chain for possible damage or wear.

Replace any drive chain that has damaged rollers, loose fitting links, or otherwise appears unserviceable.

Be sure the drive chain has dried completely before lubricating.

Lubricate the drive chain with Pro Honda HP Chain Lube or an equivalent [2].

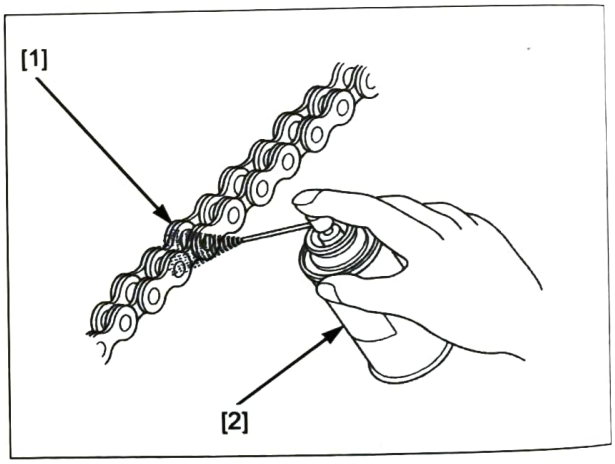

NOTICE

Do not use a chain lubricant NOT designed specifically for use with O-ring chains to lubricate the drive chain.

Wipe off the excess oil or drive chain lubricant.

SPROCKET INSPECTION

Remove the drive sprocket cover (page 2-9).

Inspect the drive and driven sprocket teeth for wear or damage, replace if necessary.

Never use a new drive chain on worn sprockets.
Both chain and sprockets must be in good condition, or new replacement chain will wear rapidly.

Check the attaching bolt [1] and self-lock nuts [2] on the drive and driven sprockets.

If any are loose, torque them to the specified toque.

TORQUE:

[1] Drive sprocket bolt: 54 N·m (5.5 kgf·m, 40 lbf·ft)
[2] Driven sprocket self-lock nut: 108 N·m (11.0 kgf·m, 80 lbf·ft)

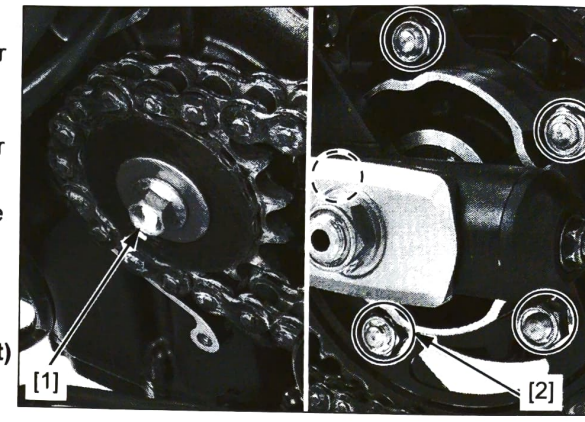

Install the drive sprocket cover (page 2-9).

REPLACEMENT

This motorcycle uses a drive chain with a staked master link.

Fully slacken the drive chain (page 3-17).

Remove the drive chain using the special tool.

TOOL:

Drive chain tool set — **07HMH-MR10103 or 07HMH-MR1010C (U.S.A. only)**

NOTE:

- When using the special tool, follow the manufacturer's instruction.

Remove the excess drive chain links from a new drive chain with the drive chain tool set.

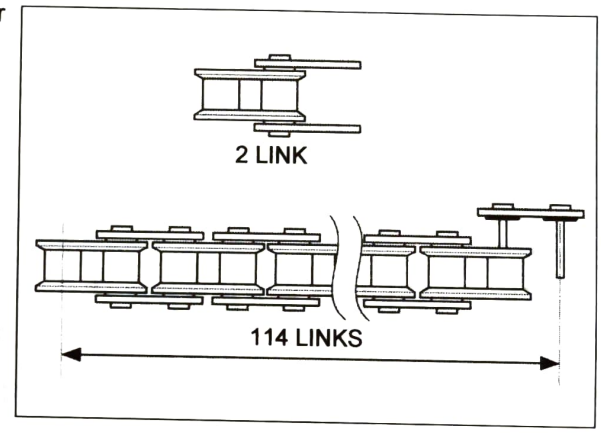

SPECIFIED LINKS: 114 LINKS

REPLACEMENT CHAIN: BP525MRO (RK)

Never reuse the old drive chain, master link, master link plate and O-rings.

Insert a new master link [1] with new O-rings [2] from the inside of the drive chain, and install a new plate [3] and O-rings with the identification mark facing out.

Assemble the master link, O-rings and plate.

TOOL:

Drive chain tool set — **07HMH-MR10103 or 07HMH-MR1010C (U.S.A. only)**

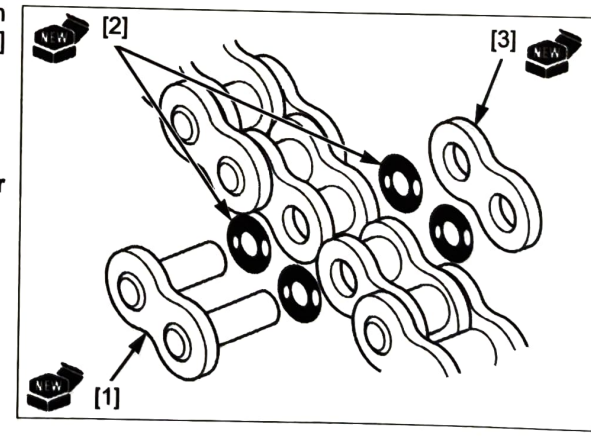

Make sure that the master link pins [1] are installed properly.
Measure the master link pin length is projected from the plate.

STANDARD LENGTH: 1.2 – 1.4 mm (0.047 – 0.055 in)

Stake the master link pins with the drive chain tool set.

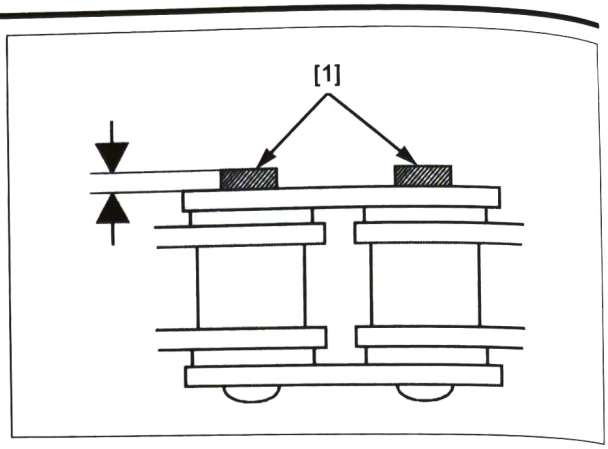

Make sure the pins are staked properly by measuring the diameter of the staked area.

DIAMETER OF STAKED AREA:
5.30 – 5.70 mm (0.209 – 0.224 in)

After staking, check the staked area of the master link for cracks.

If there is any cracking, replace the master link, O-rings and plate.

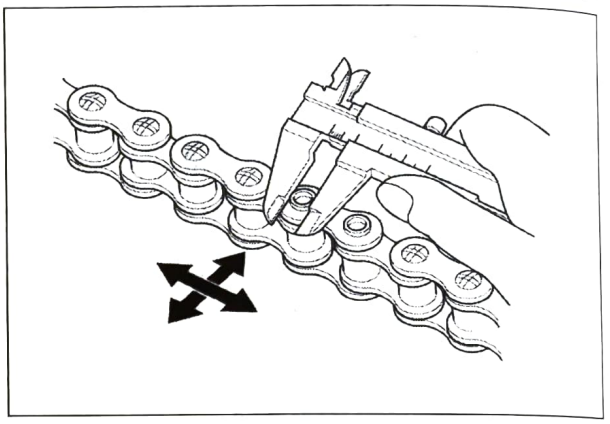

DRIVE CHAIN SLIDER

Check the drive chain slider for wear or damage.

The drive chain slider must be replaced if it is worn to the wear limit indicators [1] (page 18-8).

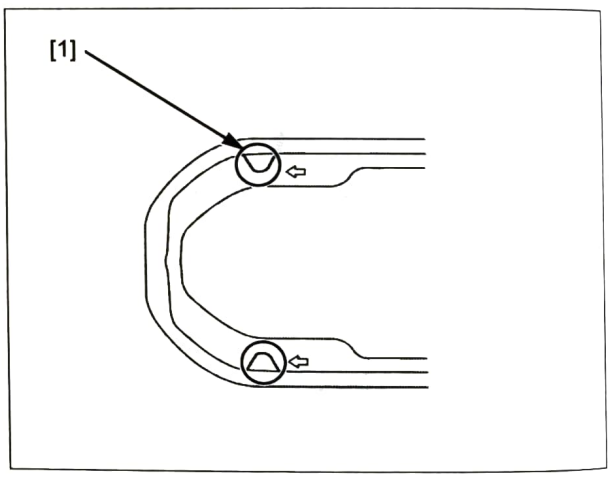

BRAKE FLUID

NOTICE

Spilled brake fluid can damage painted, plastic or rubber parts. Place a rag over these parts whenever the system is serviced.

NOTE:

- Do not mix different types of fluid, if they are not compatible with each other.
- Do not allow foreign material to enter the system when filling the reservoir.
- A low fluid level may be due to wear of the brake pads. If the brake pads are worn, the caliper piston is pushed out, and this accounts for a low reservoir level. If the brake pads are not worn and the fluid level is low, check entire system for leaks (page 3-22).

FRONT BRAKE:

Turn the handlebar so that the reservoir is level and check the front brake fluid reservoir level through the sight glass [1].

If the level is near the lower level line [2], check the brake pad wear (page 3-21).

REAR BRAKE:

Place the motorcycle on a level surface, and support it in an upright position.

Check the rear brake fluid reservoir level.

If the level is near the lower level line [3], check the brake pad wear (page 3-21).

Front:

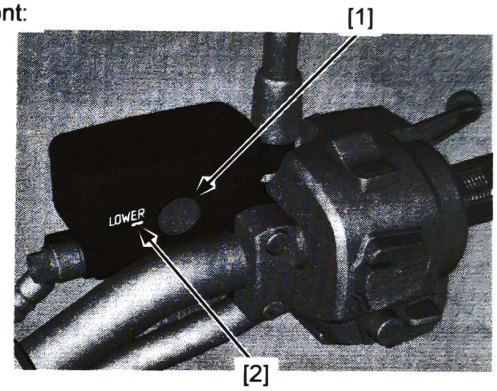

Rear:

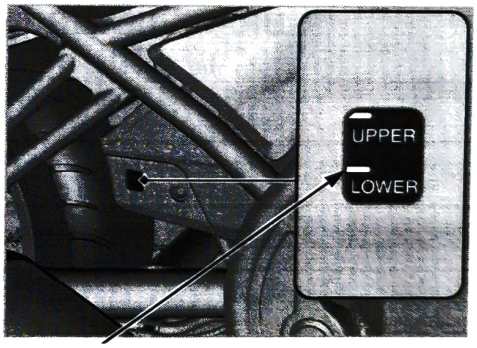

BRAKE PADS WEAR

FRONT BRAKE PADS

Check the brake pads for wear.

Always replace the brake pads as a set to assure even disc pressure.

Replace the brake pads if either pad is worn to the wear limit groove [1].

For brake pad removal/installation (page 19-7).



REAR BRAKE PADS

Check the brake pads for wear.

Always replace the brake pads as a set to assure even disc pressure.

Replace the brake pads if either pad is worn to the wear limit groove [1].

For brake pad removal/installation (page 19-7).

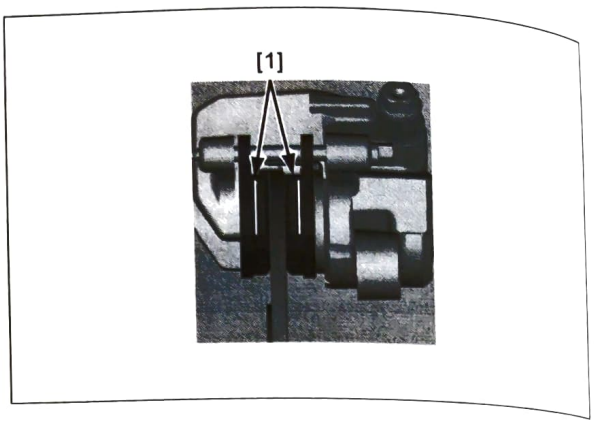

BRAKE SYSTEM

INSPECTION

Firmly apply the brake lever or pedal, and check that no air has entered the system.
If the lever or pedal feels soft or spongy when operated, bleed the air from the system (page 19-5).

Inspect the brake hose [1] and fittings for deterioration, cracks and signs of leakage.
Tighten any loose fittings.
Replace hoses and fittings as required.

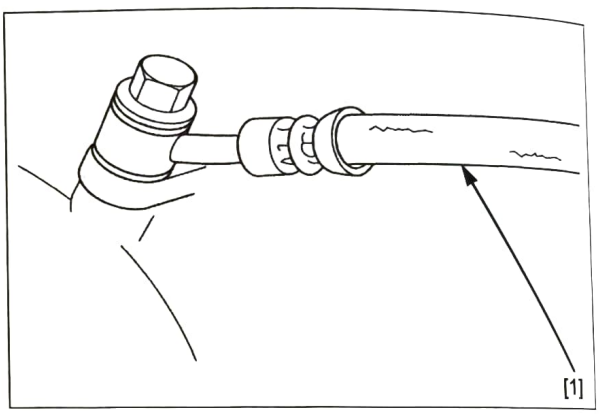

BRAKE LEVER ADJUSTMENT

Turn the adjuster [1] until the numbers align with the index mark [2] while pushing the lever forward in the desired position.

After adjustment, check that the lever [3] operates correctly before riding.

NOTE:

- Do not turn the adjuster beyond its natural limit.

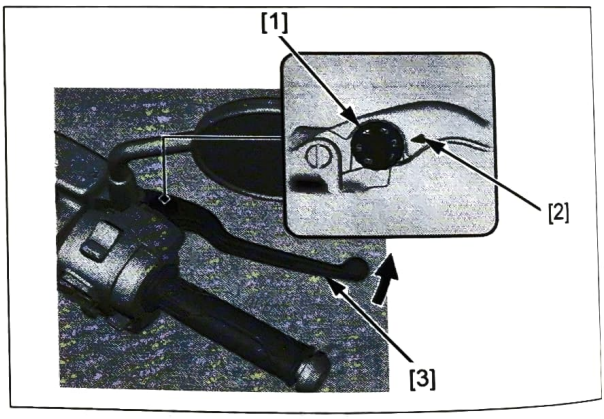

BRAKE LOCK OPERATION (DCT type)

INSPECTION

Support the motorcycle using a safety stand or hoist, raise the rear wheel off the ground.

Turn the rear wheel with your hands and pull the parking brake lever [1] slowly.
Check the parking brake lever "△" mark [2] within the index lines [3] at the rear wheel stopped.

If the parking brake lever "△" mark is not within the index lines, adjust the parking brake (page 3-23).

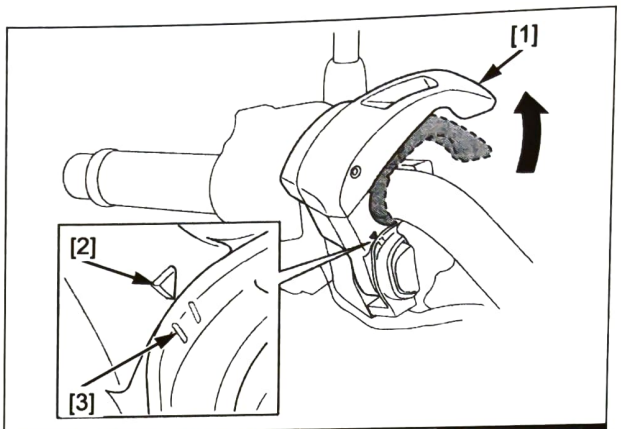

ADJUSTMENT

Parking brake lever position can be adjusted at the upper end of the parking brake cable and at the parking brake caliper adjuster bolt.

Minor adjustment is made with the upper adjuster.

Release the dust cover [1].

Adjust the lever position by loosening the lock nut [2], and turning the adjuster [3].

After adjustment, tighten the lock nut securely.

If the correct freeplay cannot be gained from the upper adjuster, turn the adjuster all the way in.

Make major adjustments with the parking brake caliper adjuster bolt.

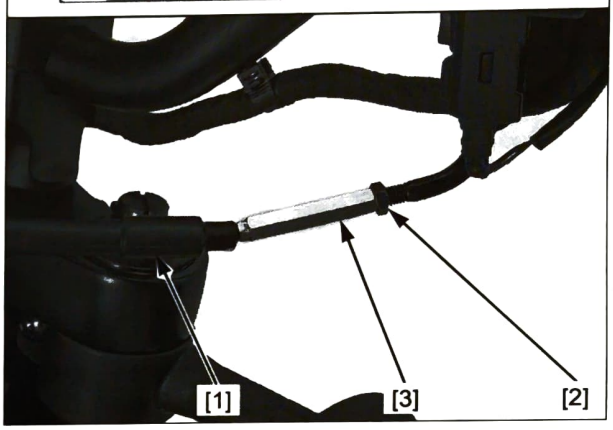

Major adjustment is made with the parking brake caliper adjuster bolt [1].

Loosen the lock nut [2].

Turn the caliper adjuster bolt.
Push the brake arm [3] and press the pad against the brake disc.
Set the distance between the cable stay [4] and the arm to the specified value as shown.

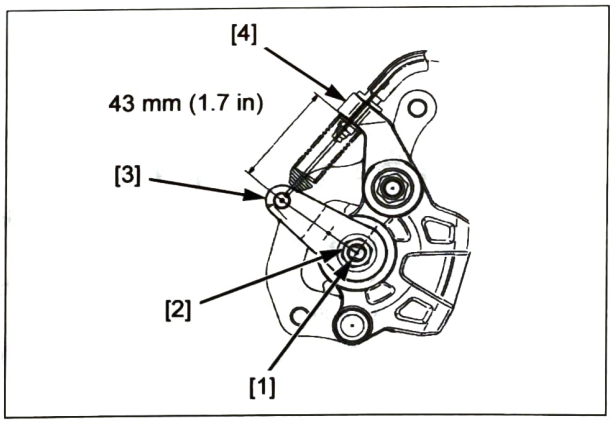

PARKING CABLE
ADJUST DISTANCE: 43 mm (1.7 in)

Push the brake arm and press the pad against the brake disc.
Tighten the lock nut to the specified torque.

TORQUE: 17 N·m (1.7 kgf·m, 13 lbf·ft)

Adjust the play with the upper adjuster.

BRAKE LIGHT SWITCH

NOTE:

- The brake light switch on the front brake master cylinder cannot be adjusted. If the front brake light switch actuation and brake engagement are not synchronized, either replace the switch unit or the malfunctioning parts of the system.

Check that the brake light comes on just prior to the brake actually being engaged.

If the light fails to come on, adjust the switch so that the light comes on at the proper time.

Hold the switch body [1] and turn the adjuster [2]. Do not turn the switch body.

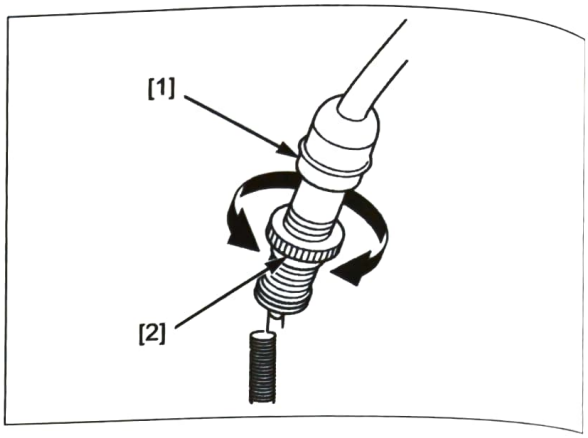

HEADLIGHT AIM

NOTE:

- Adjust the headlight aim as specified by local laws and regulations.

Support the motorcycle in an upright position on a level surface.

Adjust vertically by turning the vertical adjusting screw [2]. A clockwise rotation moves the beam down and counterclockwise rotation moves the beam up.

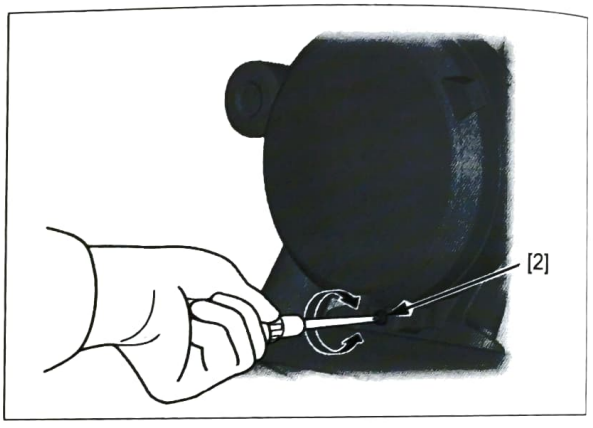

CLUTCH SYSTEM (MT type)

Inspect the clutch cable for kinks or damage, and lubricate the cable if necessary.

Measure the clutch lever freeplay at the end of the clutch lever.

FREEPLAY: 10 – 20 mm (3/8 – 13/16 in)

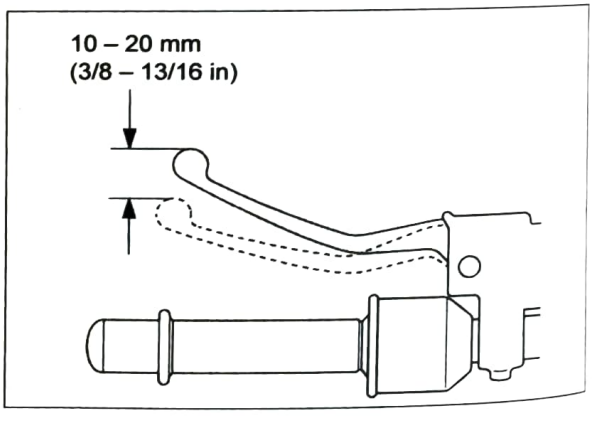

Minor adjustment is made with the upper adjuster at the clutch lever.

The adjuster may be damaged if it is positioned too far out, leaving minimal thread engagement.

Turn the adjuster [1] as required.

Tighten the lock nut while holding the adjuster.

If the adjuster is threaded out near its limit and the correct freeplay cannot be obtained, turn the adjuster all the way in and back out one turn, then perform the adjustment at major adjuster as follows.

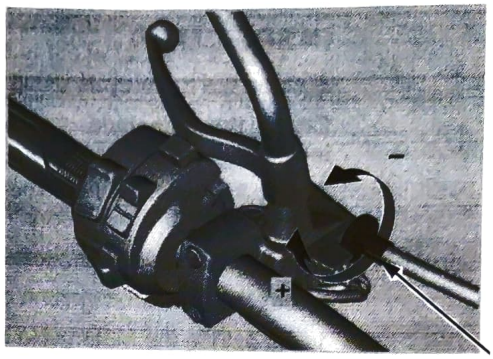

Major adjustment is made with the lower adjusting nut [1] at the clutch lifter arm.

Loosen the lock nut [2] and turn the adjusting nut as required.

Tighten the lock nut while holding the adjusting nut.

If the proper freeplay cannot be obtained, or the clutch slips during test-ride, disassemble and inspect the clutch (page 12-9).

TORQUE: 8.5 N·m (0.9 kgf·m, 6.3 lbf·ft)

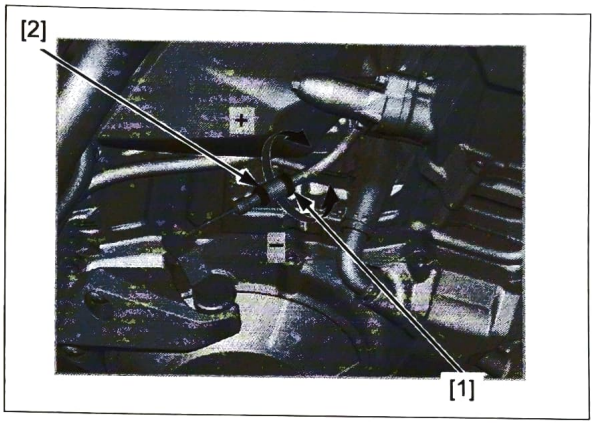

SIDESTAND

INSPECTION

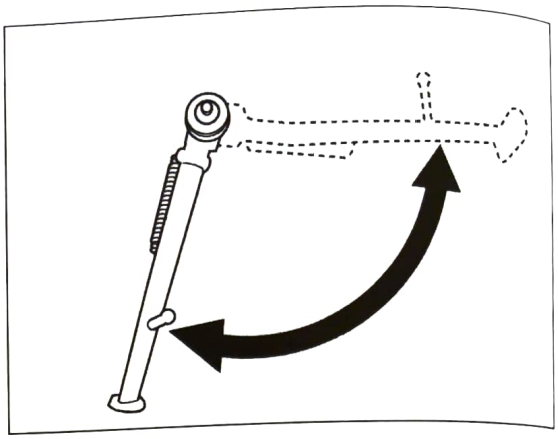

Support the motorcycle using a safety stand or hoist.

Check the sidestand spring for damage or loss of tension.

Check the sidestand for movement and lubricate the sidestand pivot if necessary.

For sidestand removal/installation (page 2-15).

Check the sidestand ignition cut-off system:

1. Sit astride the motorcycle and retract the sidestand.
2. Start the engine with the transmission in neutral, then shift the transmission into gear while squeezing the clutch lever.
3. Fully lower the sidestand.
4. The engine should stop as the sidestand is lowered.

If there is a problem with the system, check the sidestand switch (page 22-24).

SUSPENSION

FRONT SUSPENSION INSPECTION

Check the action of the forks by operating the front brake and compressing them several times. Check the entire fork assembly for signs of leaks, damage or loose fasteners.

Replace damaged components which cannot be repaired.

Tighten all fasteners.

For fork service (page 17-18).

FRONT SUSPENSION ADJUSTMENT

SPRING PRE-LOAD ADJUSTER

Spring pre-load can be adjusted by turning the adjuster [1].

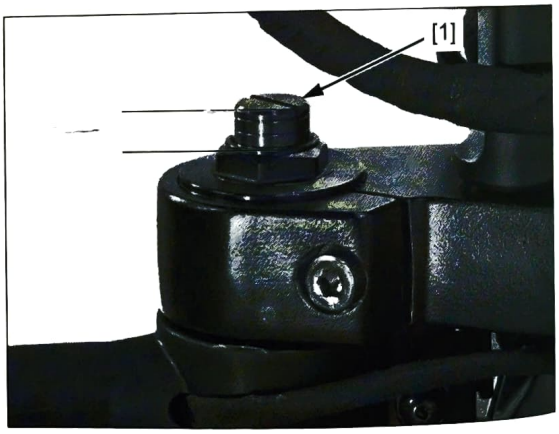

TURN CLOCKWISE:
Increases the spring pre-load (harder)
TURN COUNTERCLOCKWISE:
Decreases the spring pre-load (softer)

ADJUSTABLE RANGE:
0 – 15 mm (0 – 0.6 in) from top

STANDARD POSITION:
9 mm (0.4 in) from top

REAR SUSPENSION INSPECTION

Check the action of the shock absorber by compressing them several times.
Check the entire shock absorber assembly for leaks, damage or loose fasteners.

Replace damaged components which cannot be repaired.

Tighten all fasteners.

For shock absorber service (page 18-8).

Support the motorcycle using a hoist or equivalent and raise the rear wheel off the ground.

Check for worn swingarm bearings by grabbing the swingarm ends and attempting to move it side to side.

Replace the bearings if any looseness is noted.

For swingarm service (page 18-8).

REAR SUSPENSION ADJUSTMENT

SPRING PRE-LOAD ADJUSTER

Spring pre-load can be adjusted by turning the adjuster [1].

TURN CLOCKWISE:
Increases the spring pre-load (harder)
TURN COUNTERCLOCKWISE:
Decreases the spring pre-load (softer)

ADJUSTABLE RANGE: 18 clicks

STANDARD POSITION (from full soft position):
3 clicks (first click is "0" position)

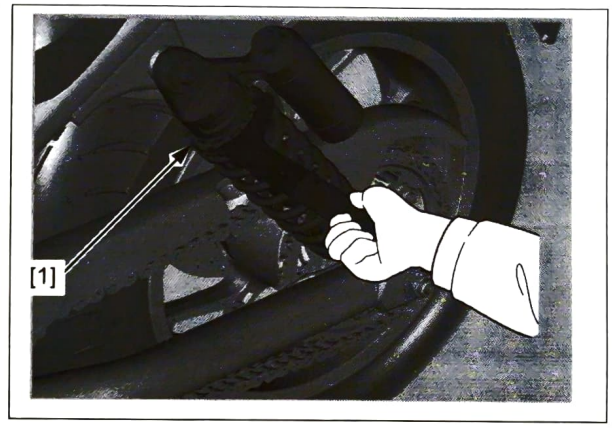

NUTS/BOLTS/FASTENERS

Check that all chassis nuts, screws and bolts are tightened to their correct torque values (page 1-11).
Check that all cotter pins, safety clips, hose clamps and cable stays are in place and properly secured.

WHEELS/TIRES

Support the motorcycle using a safety stand or hoist, raise the front wheel off the ground.

Hold the front fork leg and move the front wheel sideways with force to see if the wheel bearings are worn.

For front wheel service (page 17-14).

Support the motorcycle using a safety stand or hoist, raise the rear wheel off the ground.

Hold the swingarm and move the rear wheel sideways with force to see if the wheel and driven flange bearings are worn.

For rear wheel service (page 18-5).

Check the tire pressure with a tire pressure gauge when the tires are cold.

Check the tires for cuts, embedded nails, or other damage.
Check the front and rear wheels for trueness.

STEERING HEAD BEARINGS

Support the motorcycle using a hoist or equivalent and raise the front wheel off the ground.

Check that the handlebar moves freely from side to side. Make sure the control cables do not interfere with the handlebar rotation.

Check for steering stem bearings by grabbing the fork legs and attempting to move the front fork forward to backward.

If the handlebar moves unevenly, binds, or has vertical movement, inspect the steering bearings (page 17-28).

MEMO

SERVICE INFORMATION 4-2

SYSTEM LOCATION 4-4

PGM-FI TROUBLESHOOTING INFORMATION 4-6

PGM-FI SYMPTOM TROUBLESHOOTING 4-10

PGM-FI SYSTEM DTC INDEX 4-11

PGM-FI SYSTEM DTC TROUBLESHOOTING 4-16

MIL CIRCUIT TROUBLESHOOTING 4-54

A/F SENSOR 4-55

MAP SENSOR 4-56

IAT SENSOR 4-57

ECT SENSOR 4-57

ECM 4-58

VS SENSOR 4-60

BANK ANGLE SENSOR 4-60

GP SENSOR (MT type) 4-61

GRIP APS 4-62

FI RELAY 4-63

TBW RELAY 4-64

SUB VB RELAY 4-65

CKP SENSOR 4-65

SERVICE INFORMATION

GENERAL

- This section covers electrical system service of the PGM-FI system. For other service and fuel supply system, see Fuel System section (page 7-2).
- A faulty PGM-FI system is often related to poorly connected or corroded connectors. Check those connections before proceeding.
- The PGM-FI system is equipped with the Self-Diagnostic System (page 4-6). If the MIL lights or blinks, follow the Self-Diagnostic Procedures to remedy the problem.
- When checking the PGM-FI, always follow the steps in the troubleshooting flow chart.
- If the TCM is replaced, perform the Clutch Initialize Learning Procedure (DCT type) (page 13-65).
- The PGM-FI system is provided with a fail-safe function to secure a minimum running capability even when there is any trouble in the system. When any abnormality is detected by the self-diagnosis function, running capability is secured by making use of the numerical values of a situation preset in the simulated program map.
  It must be remembered, however, that when any abnormality is detected in an fuel injector, the fail-safe function stops the engine to protect it from damage.
- For PGM-FI system location (page 4-4).
- For PGM-FI system diagrams:
  – MT type: (page 23-8)
  – DCT type: (page 23-9)
- Use a digital tester for PGM-FI system inspection.
- The following color codes are used throughout this section.

Be = Beige	Bl = Black	Br = Brown	Bu = Blue	G = Green	Gr = Gray
Lb = Light blue	Lg = Light green	O = Orange	P = Pink	R = Red	V = Violet
W = White	Y = Yellow				

TOOLS

SCS short connector 070MZ-0010300 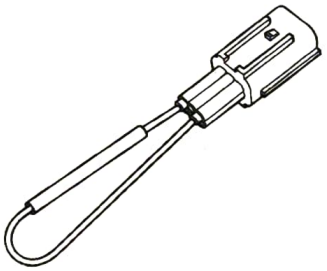 or SCS service connector 070MZ-001A300 (U.S.A. only)	Test probe, 2 packs 07ZAJ-RDJA110 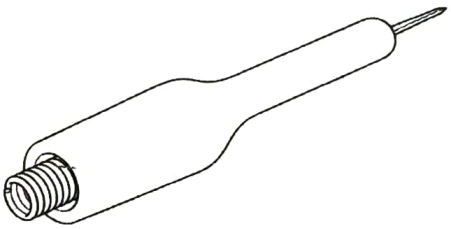

ECM-to-COMBINATION METER TWO-WAY SERIAL COMMUNICATION

This motorcycle is equipped with the ECM-to-combination meter two-way serial communication system.

The ECM sends the MIL signal information to the combination meter.

The combination meter sends the vehicle speed signal information to the ECM.

These signals are communicated between the ECM and combination meter via two wire. This wire is called the serial communication (FRM_CANL/FRM_CANH) line.

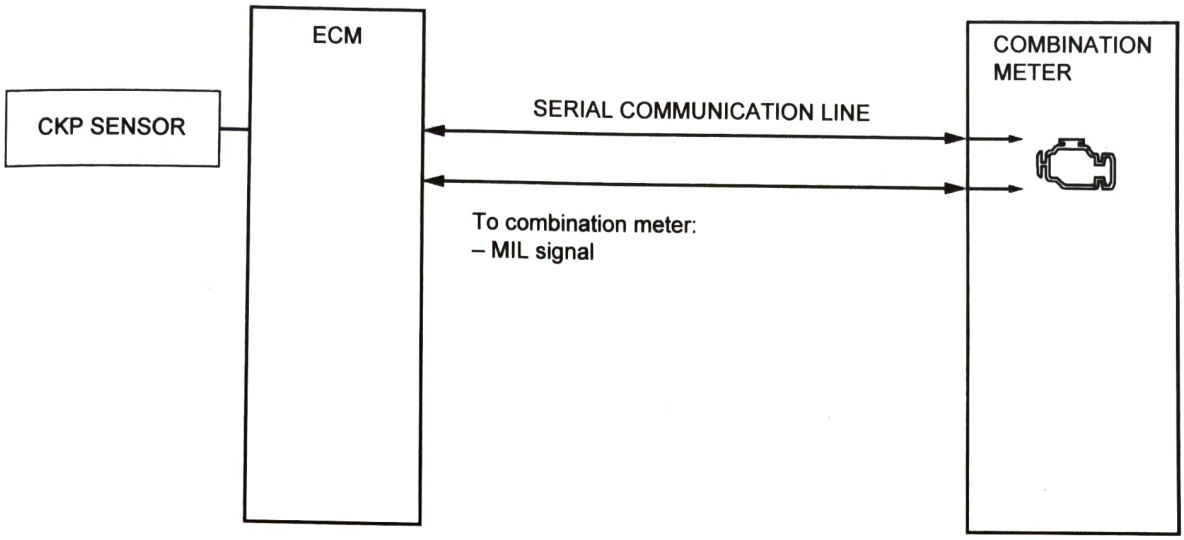

COMBINATION METER INDICATION WHEN THE SERIAL COMMUNICATION LINE IS ABNORMAL

If there is any problem in the serial communication line, the combination meter shows MIL [1] stays on at all times.

Serial communication line troubleshooting (page 4-3).

If there is any problem in the serial communication, the ECM stores it in the P U0001 (page 4-50).



SYSTEM LOCATION

MT type:

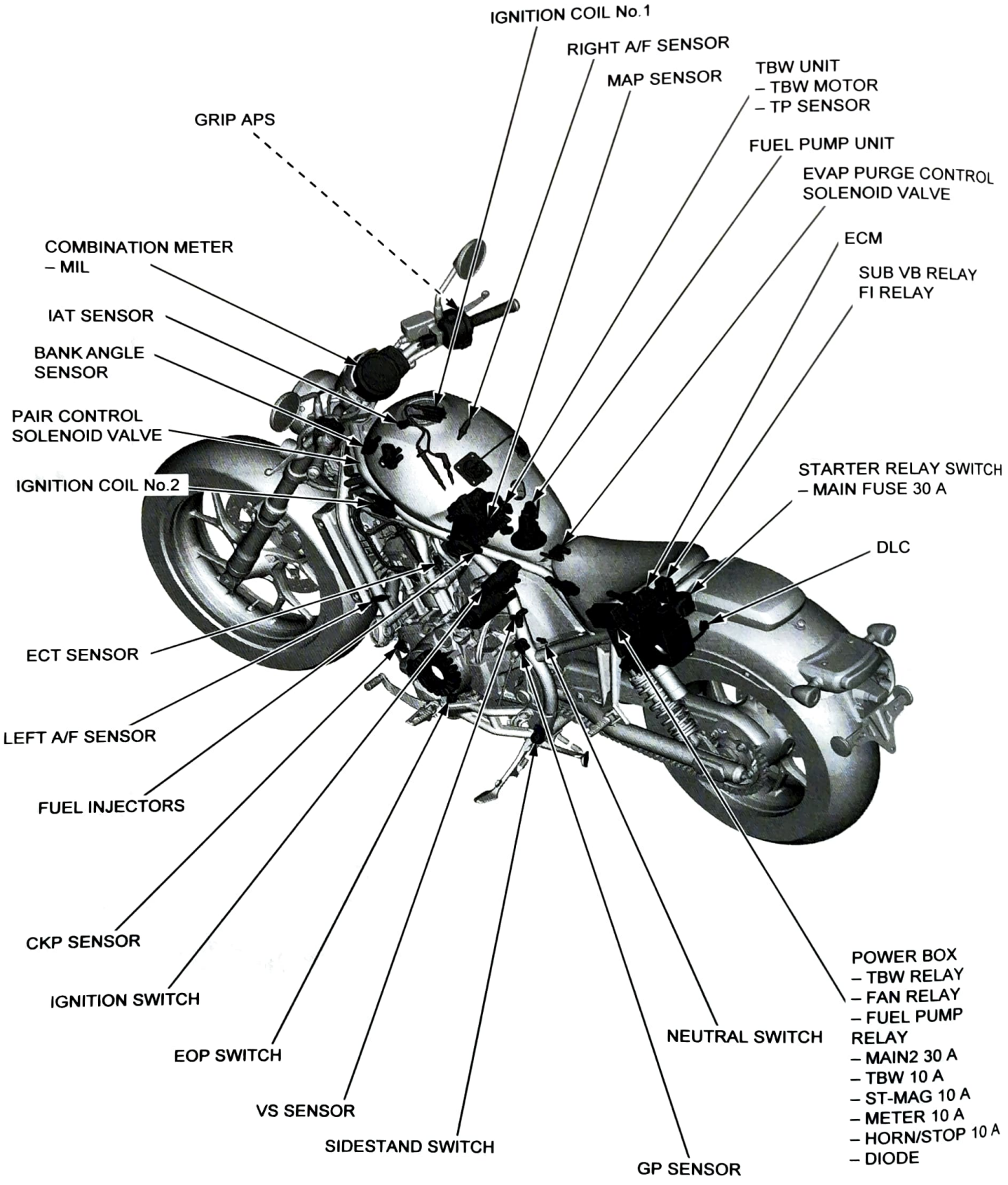

DCT type:

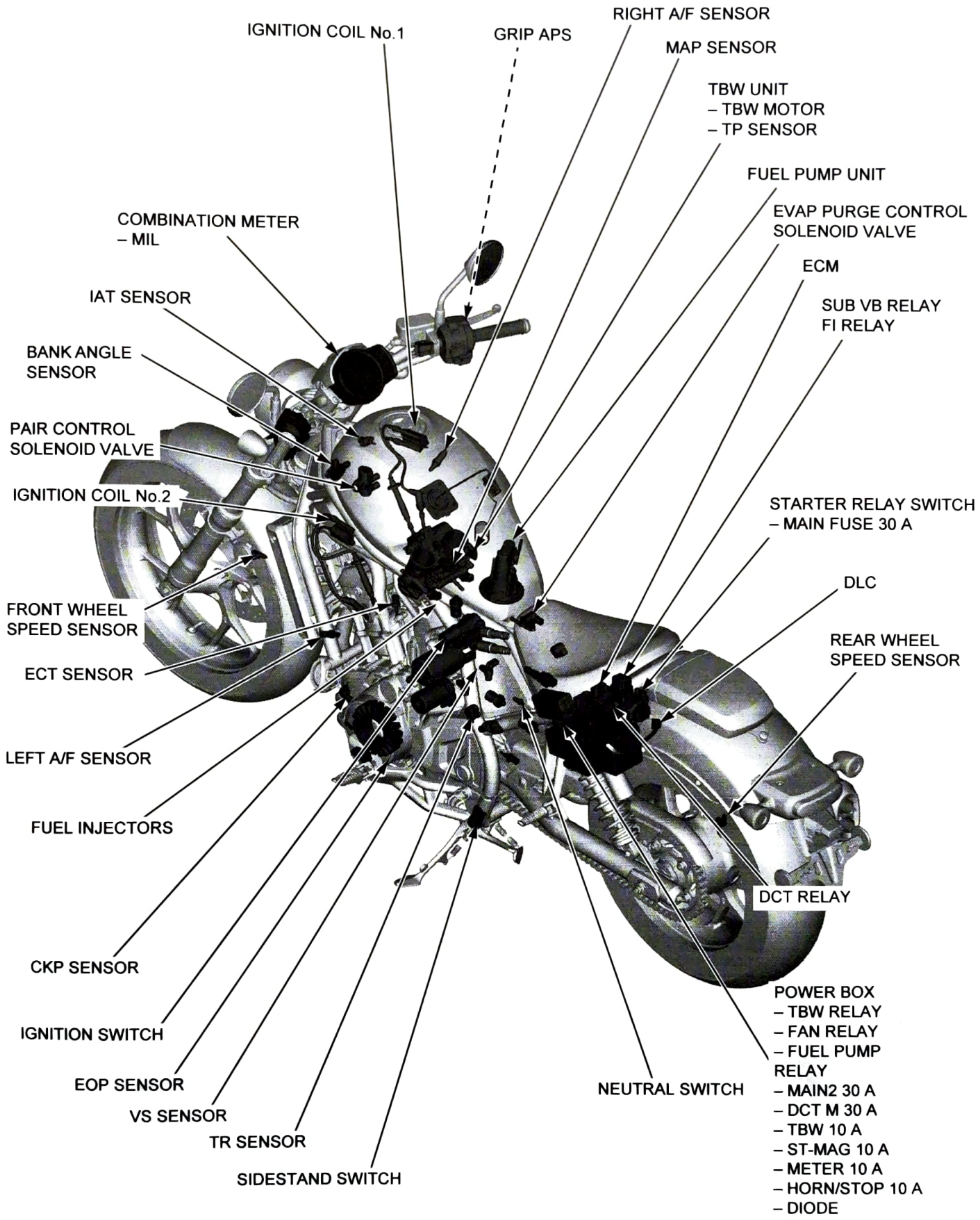
IGNITION COIL No.1
GRIP APS
RIGHT A/F SENSOR
MAP SENSOR
TBW UNIT
– TBW MOTOR
– TP SENSOR
FUEL PUMP UNIT
EVAP PURGE CONTROL SOLENOID VALVE
ECM
SUB VB RELAY
FI RELAY
COMBINATION METER
– MIL
IAT SENSOR
BANK ANGLE SENSOR
PAIR CONTROL SOLENOID VALVE
IGNITION COIL No.2
STARTER RELAY SWITCH
– MAIN FUSE 30 A
DLC
FRONT WHEEL SPEED SENSOR
REAR WHEEL SPEED SENSOR
ECT SENSOR
LEFT A/F SENSOR
FUEL INJECTORS
DCT RELAY
CKP SENSOR
IGNITION SWITCH
EOP SENSOR
VS SENSOR
TR SENSOR
SIDESTAND SWITCH
NEUTRAL SWITCH
POWER BOX
– TBW RELAY
– FAN RELAY
– FUEL PUMP RELAY
– MAIN2 30 A
– DCT M 30 A
– TBW 10 A
– ST-MAG 10 A
– METER 10 A
– HORN/STOP 10 A
– DIODE

PGM-FI TROUBLESHOOTING INFORMATION

GENERAL TROUBLESHOOTING

Intermittent Failure

The term "intermittent failure" means a system may have had a failure, but it checks OK now. If the MIL does not come on, check for poor contact or loose pins at all connectors related to the troubleshooting circuit. If the MIL was on, but then went out, the original problem may be intermittent.

Opens and Shorts

"Opens" and "Shorts" are common electrical terms. An open is a break in a wire or at a connection. A short is an accidental connection of a wire to ground or to another wire. In simple electronics, this usually means something will not work at all. With the ECM, this can something mean something works, but not the way it's supposed to.

If the MIL has come on

Refer to DTC READOUT (page 4-8).

If the MIL did not stay on

If the MIL did not stay on, but there is a driveability problem, follow guidelines on SYMPTOM TROUBLESHOOTING (page 4-10).

SYSTEM DESCRIPTION

SELF-DIAGNOSIS SYSTEM

The PGM-FI system is equipped with a self-diagnostic system. When any abnormality occurs in the system, the ECM turns on the MIL and stores a DTC in its erasable memory.

FAIL-SAFE FUNCTION

The PGM-FI system is provided with a fail-safe function to secure a minimum running capability even when there is trouble in the system. When any abnormality is detected by the self-diagnosis function, running capability is maintained by pre-programed value in the simulated program map. When any abnormality is detected in the fuel injector, the fail-safe function stops the engine to protect it from damage.

MIL Blink Pattern

- DTC can be read from the ECM memory by the MIL [1] blink pattern.
- The MIL will blink the current DTC by shorting the SCS circuit (reading DTC with DLC connector).
- When the ECM stores more than one DTC, the MIL will indicate them by blinking in the order from the lowest number to highest number.



MIL Check

When the ignition switch is turned ON the MIL will stay on for a few seconds, then go off. If the MIL does not come on, troubleshoot the MIL circuit (page 4-54).

CURRENT DTC/FREEZE DTC

The DTC is indicated in two ways according to the failure status.

- In case the ECM detects a current problem, the MIL will come on.
- In case the ECM does not detect any problem at present but has a problem stored in its memory, the MIL will not light. If it is necessary to retrieve the past problem, readout the DTC by following the DTC readout procedure (page 4-8).

MCS INFORMATION

- The MCS can readout the DTC, freeze data, current data, and other ECM condition.

How to connect the MCS

Turn the ignition switch OFF.

Remove the dummy connector from the DLC (page 4-8).

Connect the MCS to the DLC.

Turn the ignition switch ON and check the DTC and freeze data.

NOTE:

- Freeze data indicates the engine conditions when the malfunction was first detected.

GST (General Scan Tool) INFORMATION

- The GST can readout the DTC, freeze data, current data and other ECM condition.

How to connect the GST

Turn the ignition switch OFF.

Remove the main seat (page 2-4).

Remove the dummy connector [1] from the DLC [2].

Connect the GST to the DLC.
Turn the ignition switch ON and engine stop switch "○".
Check the DTC and freeze data.

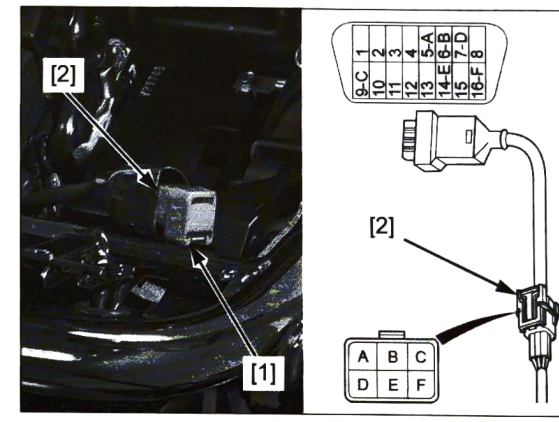

OBD harness circuit connection
(General allocation in ISO 15031-3)

	DLC 6P	16P
Signal ground	A	5
CAN_H	B	6
Discretionary (SCS line)	C	9
K-line	D	7
CAN_L	E	14
Permanent positive battery	F	16

DTC READOUT

Start the engine and check the MIL.

If the MIL stays on, connect the MCS to the DLC (page 4-7).
Read the DTC, freeze data and follow the DTC index (page 4-11).

To read the DTC by the MIL blinks, refer to the following procedure.

Reading DTC with the MIL

Turn the ignition switch OFF.

Remove the main seat (page 2-4).

Remove the dummy connector [1] from the DLC.

Short the DLC terminals using a special tool.

TOOL:
SCS short connector [2] 070MZ-0010300
or SCS service connector 070MZ-001A300 (U.S.A. only)

CONNECTION: Yellow – Green/blue

Turn the ignition switch ON, read, note the MIL blinks and refer to the DTC index (page 4-11).

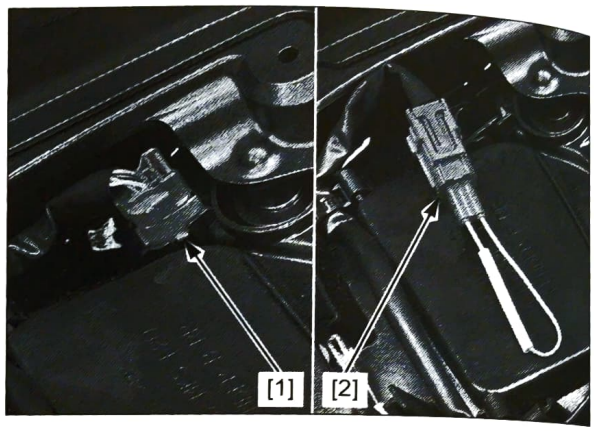

ERASING STORED DTC

NOTE:

- When the ERASING DTC procedure is performed, the DTCs of DCT system are erased at the same time.

Erase the DTC with the MCS while the engine is stopped.

To erase the DTC without MCS, refer to the following procedure.

How to clear the DTC with SCS short connector

1. Connect the SCS connector to the DLC (page 4-8).
2. Turn the ignition switch ON.
3. Disconnect the SCS short connector [1] from the DLC [2].

   Reconnect the SCS short connector to the DLC while the MIL stays ON for about 5 seconds (reset receiving pattern).
4. The stored DTC is erased if the MIL goes off and starts blinking (successful pattern).

- The DLC must be jumped while the MIL light in ON. If not, the MIL will not start blinking. In that case, turn the ignition switch OFF and try again.
- Note that the self-diagnostic memory cannot be erased if the ignition switch is turned OFF before the MIL starts blinking.

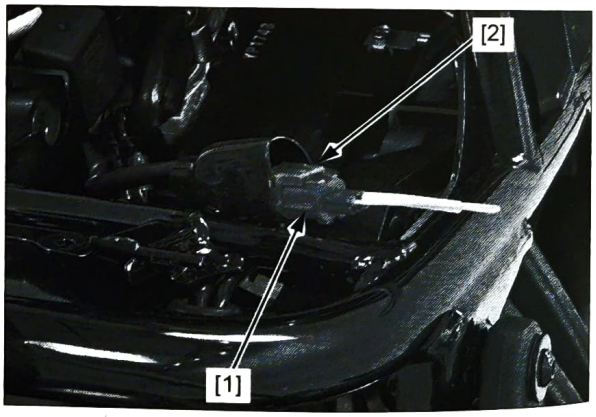

CIRCUIT INSPECTION

- Always clean around and keep any foreign material away from the ECM connector before disconnecting it.
- A faulty PGM-FI system is often related to poorly connected or corroded terminals. Check those connections before proceeding.
- In testing at the ECM connector (wire harness side) terminal, always use the test probe [1]. Insert the test probe into the connector terminal, then attach the digital multimeter probe to the test probe.

TOOL:
Test probe, 2 packs **07ZAJ-RDJA110**

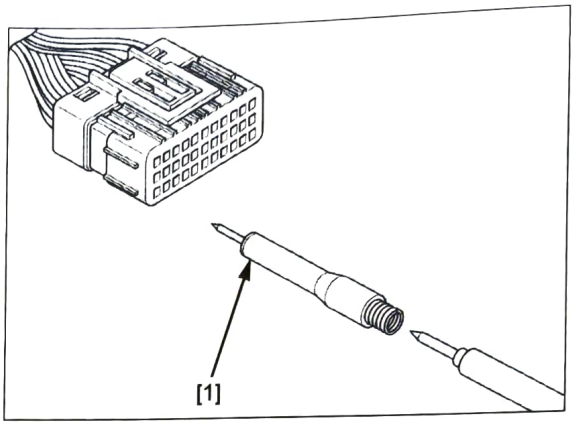

The ECM connector terminals (wire harness side) are numbered as shown in the illustration.

- ECM 39P (Black) connector A [1]
- ECM 33P (Black) connector B [2]
- ECM 33P (Gray) connector C [3]

WIRE HARNESS SIDE TERMINAL LAYOUT:

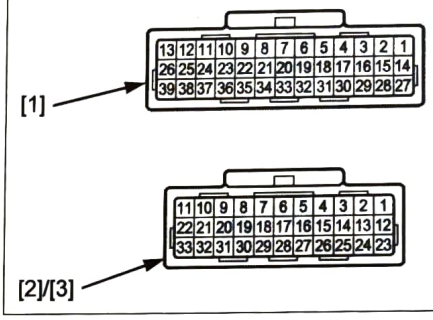

PGM-FI SYMPTOM TROUBLESHOOTING

When the motorcycle has one of these symptoms, check if the DTC or MIL is blinking, then refer to the DTC index (page 4-11)and begin the appropriate troubleshooting procedure. If there is no DTC stored in the ECM memory, do the diagnostic procedure for the symptom, in the sequence listed below, until you find the cause.

Symptom	Diagnosis procedure	Also check for
Engine cranks, but won't start (No DTC and MIL blinking)	1. Check the spark plug condition (page 3-6). 2. Inspect the ignition system (page 5-7). 3. Check the cylinder compression (page 10-5).	• Contaminated/deteriorated fuel • No fuel to fuel injector – Clogged fuel filter – Pinched or clogged fuel tank breather hose – Pinched or clogged fuel feed hose • Faulty fuel injector • Intake air leak • Faulty IMU or related circuit
Engine cranks, but won't start (No fuel pump operation sound when turning the ignition ON)	1. ECM power/ground circuits malfunction (page 4-59) 2. Check the fuel pump (page 7-7).	• Faulty FI relay or related circuit • Faulty engine stop switch or related circuit
Engine stalls, hard to start, rough idling	1. Check the idle speed (page 3-15). 2. Inspect the fuel supply system (page 7-4). 3. Inspect the battery charging system (page 21-6). 4. Inspect the ignition system (page 5-7).	• Contaminated/deteriorated fuel • Intake air leak • Pinched or clogged fuel tank breather hose • Faulty ignition system
Afterburn when engine braking is used	1. Inspect the secondary air supply system (page 7-14). 2. Inspect the ignition system (page 5-7).	
Backfiring or misfiring during acceleration	Inspect the ignition system (page 5-7).	
Poor performance (driveability) and poor fuel economy	1. Inspect the fuel supply system (page 7-4). 2. Inspect the air cleaner element (page 3-5). 3. Inspect the ignition system (page 5-7).	• Faulty pressure regulator (fuel pump) • Faulty fuel injector
Idle speed is below specifications or fast idle too low (No DTC and MIL blinking)	1. Inspect the fuel supply system (page 7-4). 2. Check the idle speed (page 3-15). 3. Inspect the ignition system (page 5-7).	
Idle speed is above specifications or fast idle too high (No DTC and MIL blinking)	1. Check the idle speed (page 3-15). 2. Check the throttle operation (page 3-4).	• Faulty ignition system • Intake air leak • Engine top-end problem • Air cleaner condition
MIL never comes on at all	1. Check the CAN line circuit. 2. Inspect the meter (page 22-8).	
MIL stays on, but no DTCs set	Inspect the MIL circuit (page 4-54). • DLC circuit malfunction • CAN line circuit malfunction	

PGM-FI SYSTEM DTC INDEX

NOTE:
- When using MCS, check the lighting or blinking state of the MIL and shift indicator, and then refer to DTC index.
- Follow the prior diagnosis notes before performing the troubleshooting, refer to the PRIOR DIAGNOSIS (page 4-16).

DTC	MID displays/ MIL blinks	Shift indicator blinks	Detected D/C (Driving Cycle)	DTC name	Refer to page
P0031	38	–	1	A/F Sensor Heater Circuit Low (Left A/F Sensor Heater Circuit Low Voltage)	4-17
P0032	38	–	1	A/F Sensor Heater Circuit High (Left A/F Sensor Heater Circuit High Voltage)	
P0051	39	–	1	A/F Sensor Heater Circuit Low (Right A/F Sensor Heater Circuit Low Voltage)	
P0052	39	–	1	A/F Sensor Heater Circuit High (Right A/F Sensor Heater Circuit High Voltage)	
P00D1	38	–	1	A/F Sensor Heater Control Circuit Performance Problem (Left A/F Sensor Heater Control Circuit Range/ performance)	4-18
P00D3	39	–	1	A/F Sensor Heater Control Circuit Performance Problem (Right A/F Sensor Heater Control Circuit Range/ performance)	
P0105	1	–	2	MAP Sensor Circuit (MAP Sensor Stuck)	4-19
P0107	1	–	1	MAP Sensor Circuit Low (MAP Sensor Circuit Low Voltage)	4-19
P0108	1	–	1	MAP Sensor Circuit High (MAP Sensor Circuit High Voltage)	
P0112	9	–	1	IAT Sensor Circuit Low (IAT Sensor Circuit Low Voltage)	4-20
P0113	9	–	1	IAT Sensor Circuit High (IAT Sensor Circuit High Voltage)	
P0117	7	–	1	ECT Sensor Circuit Low (ECT Sensor Circuit Low Voltage)	4-22
P0118	7	–	1	ECT Sensor Circuit High (ECT Sensor Circuit High Voltage)	
P0122	71	–	1	TP Sensor Circuit Low (TP Sensor 1 Low Voltage)	4-23
P0123	71	–	1	TP Sensor Circuit High (TP Sensor 1 High Voltage)	
P0131	36	–	1	O2/AF Sensor Circuit Low Voltage (Left A/F Sensor Circuit Low Voltage)	4-25
P0132	36	–	1	O2/AF Sensor Circuit High Voltage (Left A/F Sensor Circuit High Voltage)	
P0134	36	–	1	O2/AF Sensor Circuit No Activity Detected (Left A/F Sensor Circuit No Activity Detected)	4-27
P0151	37	–	1	O2/AF Sensor Circuit Low Voltage (Right A/F Sensor Circuit Low Voltage)	4-25
P0152	37	–	1	O2/AF Sensor Circuit High Voltage (Right A/F Sensor Circuit High Voltage)	
P0154	37	–	1	O2/AF Sensor Circuit No Activity Detected (Right A/F Sensor Circuit No Activity Detected)	4-27
P0197	–	44	–	DCT type: EOT Sensor Circuit Low (EOT Sensor Low Voltage)	13-13
P0198	–	44	–	DCT type: EOT Sensor Circuit High (EOT Sensor High Voltage)	
P0201	12	–	1	Cylinder 1 Injector Circuit (No. 1 (Left) Fuel Injector Malfunction)	4-27
P0202	13	–	1	Cylinder 2 Injector Circuit (No. 2 (Right) Fuel Injector Malfunction)	

DTC	MID displays/ MIL blinks	Shift indicator blinks	Detected D/C (Driving Cycle)	DTC name	Refer to page
P0222	72	–	1	TP Sensor 2 Circuit Low (TP Sensor 2 Low Voltage)	4-29
P0223	72	–	1	TP Sensor 2 Circuit High (TP Sensor 2 High Voltage)	
P0351	91	–	1	Ignition Coil 1 Primary Control Circuit Open (No.1 (No.1 Cylinder) Ignition Coil Circuit Malfunction)	4-30
P0352	92	–	1	Ignition Coil 2 Primary Control Circuit Open (No.2 (No.2 Cylinder) Ignition Coil Circuit Malfunction)	
P0412	89	–	1	AIR System Switching Valve Circuit (PAIR Control Solenoid Valve Malfunction)	4-31
P0443	88	–	1	EVAP System Purge Control Valve Circuit (EVAP Purge Control Solenoid Valve Malfunction)	4-33
P0500	67	–	1	MT type: VSP Sensor 1 Malfunction (Front Wheel Speed Sensor Malfunction)	4-34
	67	67	1	DCT type: VSP Sensor 1 Malfunction (Front Wheel Speed Sensor Malfunction)	
P0501	–	66	1	DCT type: Vehicle Speed Sensor Range Performance Error (Front Wheel Pulser Ring Malfunction)	13-14
P0522	83	–	1	EOP Sensor Low (EOP Sensor Low Voltage)	13-14
P0523	83	–	1	EOP Sensor High (EOP Sensor High Voltage)	
P0562	126	37	1	System Voltage (Sub VB Relay Malfunction)	4-35
P0606	84	84	1	Control Module Processor (CPU in the ECM Malfunction)	4-36
P062F	33	–	1	ICM EEPROM Error (ECM EEPROM Malfunction)	4-37
P064D	38	–	1	ICM O2 Sensor CPU Performance Problem (Left A/F Sensor IC Circuit Abnormal)	4-37
P064E	39	–	1	ICM O2 Sensor Processor Performance Problem (Right A/F Sensor IC Circuit Abnormal)	
P0686	126	–	1	MT type: ECM/PCM Power Relay Control Circuit Low (Ignition Hold Relay Stuck OFF)	4-35
	126	37	1	DCT type: ECM/PCM Power Relay Control Circuit Low (Ignition Hold Relay Stuck OFF)	
P0687	126	–	1	MT type: ECM/PCM Power Relay Control Circuit High (Ignition Hold Relay Stuck ON)	
	126	37	1	DCT type: ECM/PCM Power Relay Control Circuit High (Ignition Hold Relay Stuck ON)	
P0715	–	53	1	DCT type: Input Speed Sensor 1 Circuit (Inner Mainshaft Speed Low)	13-16
P0722	11	–	1	MT type: OS Sensor Circuit No Signal (VS Sensor Circuit No Signal)	4-38
	11	11	1	DCT type: OS Sensor Circuit No Signal (VS Sensor Circuit No Signal)	
P1000	54	–	1	Bank Angle Sensor Circuit Low (Bank Angle Sensor Circuit Low Voltage)	4-39
P1001	54	–	1	Bank Angle Sensor Circuit High (Bank Angle Sensor Circuit High Voltage)	4-41

DTC	MID displays/ MIL blinks	Shift indicator blinks	Detected D/C (Driving Cycle)	DTC name	Refer to page
P0745	–	55	1	DCT type: Pressure Control Solenoid Malfunction (No.1 Linear Solenoid Valve Current Failure)	13-17
	–	55	1	DCT type: Pressure Control Solenoid Malfunction (No.1 Linear Solenoid Valve Driver in the TCM Failure)	
P0775	–	56	1	DCT type: Pressure Control Solenoid 2 Malfunction (No.2 Linear Solenoid Valve Current Failure)	13-18
	–	56	1	DCT type: Pressure Control Solenoid 2 Malfunction (No.2 Linear Solenoid Valve Driver in the TCM Failure)	
P0851	–	52	–	DCT type: Park/Neutral Switch Input Circuit Low (Neutral Switch Stuck OFF)	13-19
P0852	–	52	–	DCT type: Park/Neutral Switch Input Circuit High (Neutral Switch Stuck ON)	
P1658	85	–	1	TBW Switch Malfunction (ON Side) (TBW Relay Failure (ON Side))	4-41
P1659	85	–	1	TBW Switch Malfunction (OFF Side) (TBW Relay Failure (OFF Side))	
P1700	–	71	1	DCT type: In Main/Countershaft SP Ratio Failure (Inner Mainshaft/countershaft Speed Ratio Failure)	13-20
P1701	–	72	1	DCT type: Outer Main/Countershaft SP Ratio Failure (Outer Mainshaft/countershaft Speed Ratio Failure)	
P1702	41	–	1	MT type: GP Sensor Circuit Low (GP Sensor Low Voltage)	4-42
	–	51	1	DCT type: TR Sensor Circuit Low (TR Sensor Low Voltage)	13-20
P1703	41	–	1	MT type: GP Sensor Circuit High (GP Sensor High Voltage)	4-42
	–	51	1	DCT type: TR Sensor Circuit High (TR Sensor High Voltage)	13-20
P1704	–	47	1	DCT type: No.1 Clutch EOP Sensor Low Voltage	13-22
P1705	–	47	1	DCT type: No.1 Clutch EOP Sensor High Voltage	
P1706	–	48	1	DCT type: No.2 Clutch EOP Sensor Low Voltage	
P1707	–	48	1	DCT type: No.2 Clutch EOP Sensor High Voltage	
P1708	–	21	1	DCT type: Shift Spindle Angle Sensor Low Voltage	13-23
P1709	–	21	1	DCT type: Shift Spindle Angle Sensor High Voltage	13-23
P170A	–	24	1	DCT type: Shift Control Motor Drive Circuit	13-24
P170B	–	31	1	DCT type: Shift Control Motor Low Voltage	
P1712	123	84	1	DCT type: TCM CPU Malfunction (CPU in the ECM or TCM Malfunction)	4-43
P1713	–	22	1	DCT type: Spindle Operation During Shifter Stop (Shift Spindle Operation Malfunction (After Operating Gearshift Mechanism))	13-26

DTC	MID displays/ MIL blinks	Shift indicator blinks	Detected D/C (Driving Cycle)	DTC name	Refer to page
P1714	–	27	1	DCT type: Shift Drum Position Malfunction	13-26
P1716	–	9	–	DCT type: Clutch Line EOP Sensor High Voltage (Clutch Line EOP Sensor Low Voltage)	13-27
P1717	–	9	–	DCT type: Clutch Line EOP Sensor Low Voltage (Clutch Line EOP Sensor High Voltage)	
P1718	–	49	–	DCT type: Shift Control Motor Drive Circuit (Clutch Line Low Oil Pressure)	13-28
P1719	–	68	1	DCT type: Clutch (1) Being Dysversion (No.1 Clutch Operation Malfunction (Clutch Slips))	13-28
P171A	–	69	1	DCT type: Clutch (2) Being Dysversion (No.2 Clutch Operation Malfunction (Clutch Slips))	13-29
P171B	–	58	–	DCT type: Clutch Bite Crowded (Clutch 1 Not Opening) (No.1 Clutch Does Not Disengage (When Shifting Gear))	13-29
P171C	–	59	–	DCT type: Clutch Bite Crowded (Clutch 2 Not Opening) (No.2 Clutch Does Not Disengage (When Shifting Gear))	
P171D	–	61	–	DCT type: Clutch Bite Crowded (1) Pressure Not Opening (No.1 Clutch Oil Pressure Canceling Malfunction)	13-30
P171E	–	61	1	DCT type: Clutch (1) Hydraulic Pressure Malfunction (No.1 Clutch Oil Pressure Malfunction (at Clutch Initial Diagnosis))	
P171F	–	61	1	DCT type: Clutch (1) No Pressure (No.1 Clutch No Oil Pressure)	
P1720	–	61	1	DCT type: Clutch (1) Hydraulic Pressure Low (No.1 Clutch Oil Pressure Degradation)	
P1721	–	62	–	DCT type: Clutch (1) Hydraulic Pressure Rise (No.1 Clutch Oil Pressure High)	
P1722	–	63	–	DCT type: Clutch Bite Crowded (2) Pressure Not Opening (No.2 Clutch Oil Pressure Canceling Malfunction)	
P1723	–	63	1	DCT type: Clutch (2) Hydraulic Pressure Malfunction (No.2 Clutch Oil Pressure Malfunction (at Clutch Initial Diagnosis))	
P1724	–	63	1	DCT type: Clutch (2) No Pressure (No.2 Clutch No Oil Pressure)	
P1725	–	63	1	DCT type: Clutch (2) Hydraulic Pressure Low (No.2 Clutch Oil Pressure Degradation)	
P1726	–	64	–	DCT type: Clutch (2) Hydraulic Pressure Rise (No.2 Clutch Oil Pressure High)	13-30
P1728	–	57	1	DCT type: Shifter Malfunction (Gearshift Mechanism Malfunction)	
P1729	–	57	1	DCT type: Shifter Setting Malfunction (Gear Position Malfunction (Jumps Out of Gear))	

DTC	MID displays/ MIL blinks	Shift indicator blinks	Detected D/C (Driving Cycle)	DTC name	Refer to page
P172C	–	46	–	DCT type: N-D Switch Signal Malfunction (N-D Switch Malfunction)	13-30
P172D	–	45	–	DCT type: Shifter Driven in Spindle Inactive (Shift Switch Malfunction)	13-32
P172E	–	32	1	DCT type: FSR Malfunction (Fail Safe Relay Circuit Malfunction)	13-33
P2101	79	–	1	Throttle Actuator Circuit Performance Problem (TBW System Control Correlation Failure)	4-44
P2118	78	–	1	Throttle Actuator Current Performance Problem (TBW Motor Malfunction)	
P2122	74	–	1	APS 1 Sensor Circuit Low (APS 1 (TCP) Low Voltage)	4-45
P2123	74	–	1	APS 1 Sensor Circuit High (APS 1 (TCP) High Voltage)	
P2127	75	–	1	APS 2 Sensor Circuit Low (APS 2 (TCP) Low Voltage)	4-46
P2128	75	–	1	APS 2 Sensor Circuit High (APS 2 (TCP) High Voltage)	
P2135	73	–	1	TP Sensor 1/2 Voltage Correlation (TP Sensors 1 and 2 Voltage Correlation Malfunction)	4-47
	73	–	1	TP Sensor 1/2 Voltage Correlation (TP Sensors 1 and 2 Short Circuit)	
P2138	76	–	1	APS 1/2 Sensor Voltage Correlation (APS 1 – 2 (TCP) Voltage Correlation Malfunction)	4-48
P2158	66	–	1	MT type: VSP Sensor 2 Malfunction (Rear Wheel Speed Sensor Malfunction)	4-49
	66	66	1	DCT type: VSP Sensor 2 Malfunction (Rear Wheel Speed Sensor Malfunction)	
P2765	–	54	1	DCT type: Input Speed Sensor 2 Circuit (Outer Mainshaft Speed Low)	13-34
U0001	103	–	1	CAN Communication Malfunction (CAN Communication Malfunction)	4-50
U0155	103	–	1	CAN Communication Malfunction (TCM-GCM) (Meter CAN Communication Malfunction)	4-52
U019E	112	–	1	CAN Communication Malfunction (PTCAN) (Power train CAN Communication Malfunction)	4-52

PGM-FI SYSTEM DTC TROUBLESHOOTING

PRIOR DIAGNOSIS

Before processing the DTC troubleshooting, check as follows:

- Check for loose or poor contact on the DTC related connectors (each sensor, solenoid, unit etc.), then recheck the DTC.
- Erase the DTC (page 4-8)and recheck it.
- Refer to probable cause of each detected DTC and check the listed items first. If possible, correct the abnormally.

NOTE:

- Always turn the ignition switch OFF when checking the continuity of the circuit and before disconnecting the connectors.
- Some DTCs have a recheck function, so that the priority DTC is detected when the ignition switch is switched from OFF to ON. Wait for 10 seconds and check the DTC again.

COMMON TROUBLESHOOTING INFORMATION

NOTE:

- Always use the test probe when inspecting at the ECM, TCM, ABS modulator, BCU, and SCU connectors.

TOOL:
Test probe, 2 packs **07ZAJ-RDJA110**

- If the TCM is replaced, perform the Clutch Initialize Learning Procedure (page 13-65).
- When performing the test ride in the procedure of the troubleshooting, set the motorcycle to the preferred value as below chart. Conduct a test ride with your confirmation.

Motorcycle speed*:	**About 60 km/h (37 mph)**
Running time:	**1 minute or more**
Engine revolution:	**4,000 – 7,500 rpm**
Throttle opening angle:	**14 degrees or more**

*: If the test ride cannot be performed, replace parts that may be abnormal.

DTC P0031/DTC P0032/DTC P0051/ DTC P0052

Probable cause:

- Faulty A/F sensor heater or its related circuit
- Faulty ECM

Symptom/Fail-safe function:

- Fuel consumption deterioration
- Detected value feedback stops

1. A/F Sensor Heater Line Open Circuit Inspection

Disconnect the ECM 39P connector (page 4-58).
Disconnect the ECM 33P (Gray) connector (page 4-58).
Disconnect the A/F sensor connector (page 4-55).
Check for continuity between the wire harness side left A/F sensor connector [1] and ECM 39P connector [2].

CONNECTION: White – A14

Check for continuity between the wire harness side right A/F sensor connector [3] and ECM 33P (Gray) connector [4].

CONNECTION: White – C22

Is there continuity?

YES – GO TO STEP 2.

NO – Open circuit in the White wire

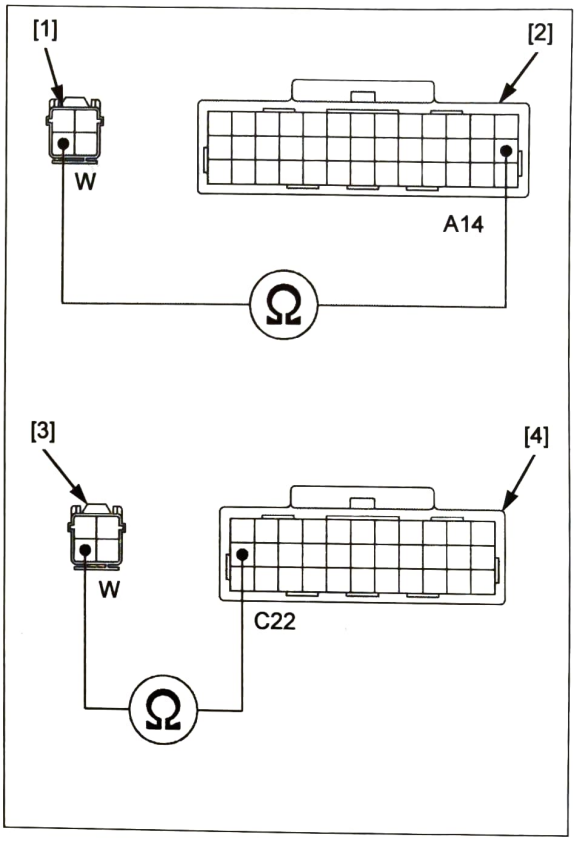

2. A/F Sensor Heater Ground Line Open Circuit Inspection

Check for continuity between the wire harness side A/F sensor connector [1] and ground.

CONNECTION: Green – Ground

Is there continuity?

YES – GO TO STEP 3.

NO – Open circuit in the Green wire

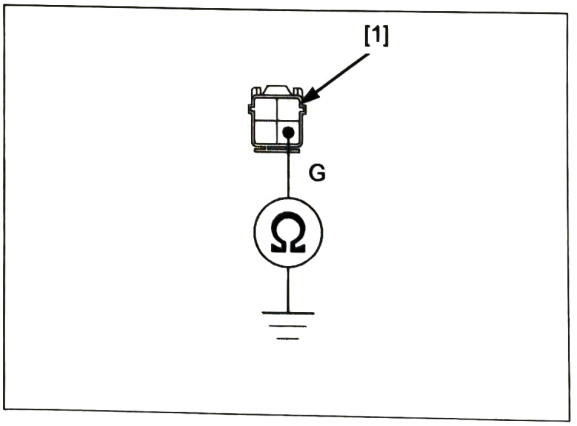

3. **A/F Sensor Heater Output Line Short Circuit Inspection**

Check for continuity between the wire harness side A/F sensor connector [1] and ground.

CONNECTION: White – Ground

Is there continuity?

YES – Short circuit in the White wire

NO – GO TO STEP 4.

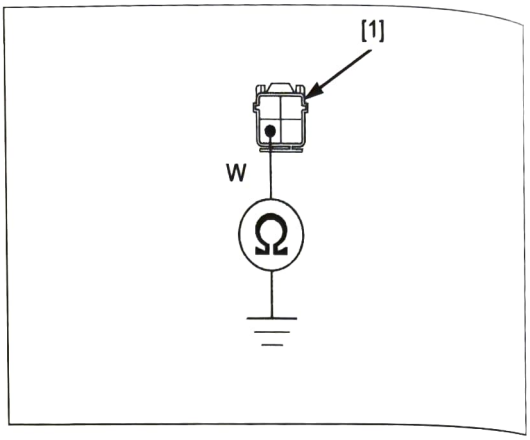

4. **A/F Sensor Inspection**

Replace the A/F sensor with a new one.
Connect the disconnected connector(s).
Erase the DTC.
Start the engine and wait for a minute.
Check the DTC with MCS.

Is same DTC indicated?

YES – Replace the ECM with a new one, and recheck.

NO – Faulty original A/F sensor

DTC P00D1/DTC P00D3

Probable cause:

- Faulty A/F sensor heater or its related circuit
- Faulty ECM

Symptom/Fail-safe function:

- Fuel consumption deterioration
- Detected value feedback stops

1. **A/F Sensor Inspection**

Replace the A/F sensor with a new one.
Erase the DTC.
Start the engine and wait for a minute.
Check the DTC with MCS.

Is same DTC indicated?

YES – Replace the ECM with a new one, and recheck.

NO – Faulty original A/F sensor

DTC P0105

Probable cause:

- Faulty MAP sensor or its related circuit
- Loose or poor connection of the MAP sensor hose
- Clogged MAP sensor hose
- Faulty ECM

Symptom/Fail-safe function:

- Rough idling
- Driveability deterioration

1. MAP Sensor Inspection

Replace the MAP sensor with a new one.
Erase the DTC.
Start the engine and wait for three seconds.
Check the DTC with MCS.

Is same DTC indicated?

YES – Replace the ECM with a new one, and recheck.

NO – Faulty original MAP sensor

DTC P0107/DTC P0108

Probable cause:

- Faulty MAP sensor or its related circuit
- Faulty ECM

Symptom/Fail-safe function:

- Rough idling

1. MAP Sensor Input Voltage Inspection

Disconnect the MAP sensor connector (page 4-56).
Turn the ignition switch ON.
Measure the voltage at the wire harness side MAP sensor connector [1].

CONNECTION: Yellow (+) – Gray (–)

Is the voltage within 4.75 – 5.25 V?

YES – GO TO STEP 2.

NO – • Open or short circuit in the Yellow wire
• Open circuit in the Gray wire
• If the wire is OK, replace the ECM with a new one, and recheck.

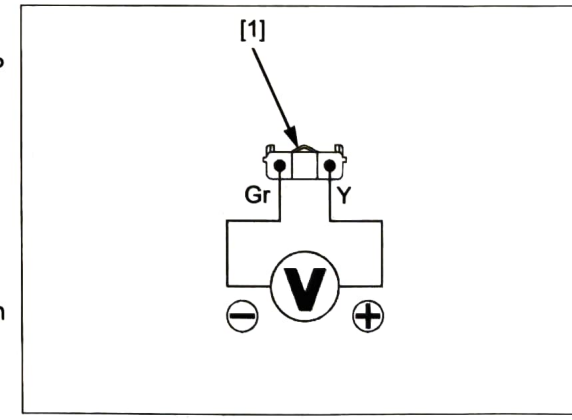

2. MAP Sensor Signal Line Open Circuit Inspection

Disconnect the ECM 39P connector (page 4-58).
Check for continuity between the wire harness side MAP sensor connector [1] and ECM 39P connector [2].

CONNECTION: Light green – A15

Is there continuity?

YES – GO TO STEP 3.

NO – Open circuit in the Light green wire

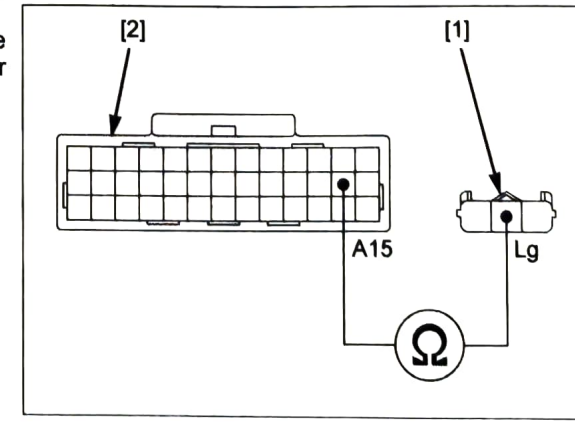

3. **MAP Sensor Signal Line Short Circuit Inspection**

Check for continuity between the wire harness side MAP sensor connector [1] and ground.

CONNECTION: Light green – Ground

Is there continuity?

YES – Short circuit in the Light green wire

NO – GO TO STEP 4.

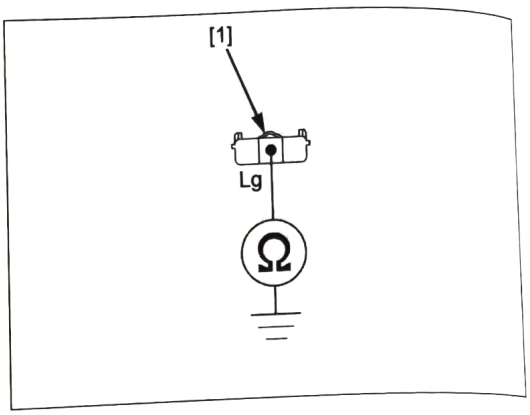

4. **MAP Sensor Inspection**

Replace the MAP sensor with a new one.
Connect the disconnected connector(s).
Erase the DTC.
Turn the ignition switch ON and wait for 10 seconds.
Check the DTC with MCS.

Is same DTC indicated?

YES – Replace the ECM with a new one, and recheck.

NO – Faulty original MAP sensor

DTC P0112/DTC P0113

Probable cause:

- Faulty IAT sensor or its related circuit
- Faulty ECM

Symptom/Fail-safe function:

- Engine operates normally

1. **IAT Sensor Output Line Open Circuit Inspection**

Disconnect the ECM 39P connector (page 4-58).
Disconnect the IAT sensor connector (page 4-57).
Check for continuity between the wire harness side IAT sensor connector [1] and ECM 39P connector [2].

CONNECTION: Yellow – A17

Is there continuity?

YES – GO TO STEP 2.

NO – Open circuit in the Yellow wire

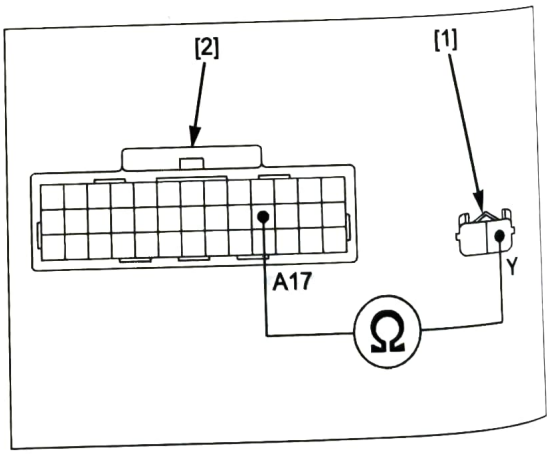

2. IAT Sensor Output Line Short Circuit Inspection

Check for continuity between the wire harness side IAT sensor connector [1] and ground.

CONNECTION: Yellow – Ground

Is there continuity?

YES – Short circuit in the Yellow wire

NO – GO TO STEP 3.

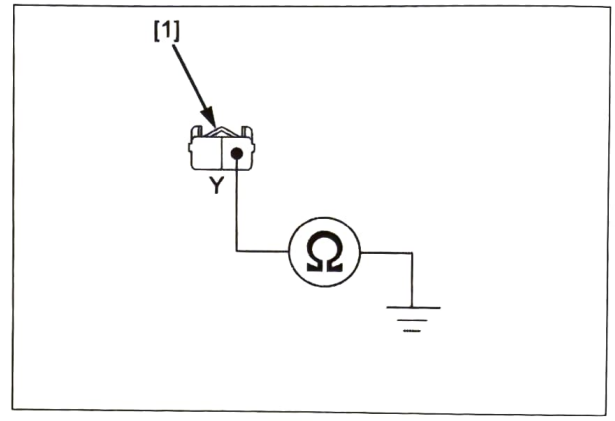

3. IAT Sensor Ground Line Open Circuit Inspection

Disconnect the ECM 33P (Black) connector (page 4-58).
Check for continuity between the wire harness side IAT sensor connector [1] and ECM 33P (Black) connector [2].

CONNECTION: Gray – B23

Is there continuity?

YES – GO TO STEP 4.

NO – Open circuit in the Gray wire

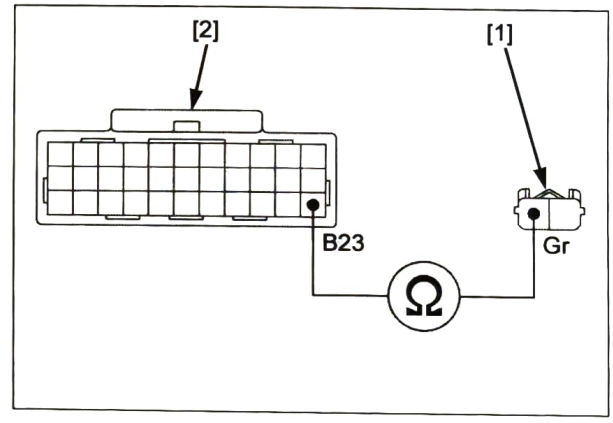

4. IAT Sensor Inspection

Replace the IAT sensor with a new one.
Erase the DTC.
Turn the ignition switch ON and wait for 10 seconds.
Check the DTC with MCS.

Is same DTC indicated?

YES – Replace the ECM with a new one, and recheck.

NO – Faulty original IAT sensor

DTC P0117/DTC P0118

Probable cause:

- Faulty ECT sensor or its related circuit
- Faulty ECM

Symptom/Fail-safe function:

- Hard to start at a low temperature
- Driveability deterioration

1. ECT Sensor Output Line Open Circuit Inspection

Disconnect the ECM 33P (Black) connector (page 4-58).
Disconnect the ECT sensor connector (page 4-57).
Check for continuity between the wire harness side ECT sensor connector [1] and ECM 33P (Black) connector [2].

CONNECTION: Blue – B20

Is there continuity?

YES – GO TO STEP 2.

NO – Open circuit in the Blue wire

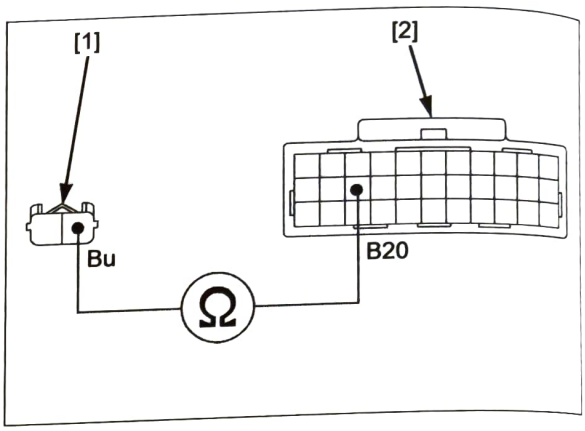

2. ECT Sensor Output Line Short Circuit Inspection

Check for continuity between the wire harness side ECT sensor connector [1] and ground.

CONNECTION: Blue – Ground

Is there continuity?

YES – Short circuit in the Blue wire

NO – GO TO STEP 3.

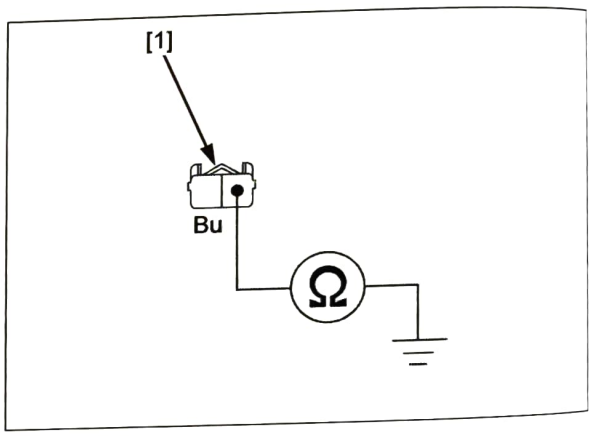

3. ECT Sensor Ground Line Open Circuit Inspection

Check for continuity between the wire harness side ECT sensor connector [1] and ECM 33P (Black) connector [2].

CONNECTION: Gray – B23

Is there continuity?

YES – GO TO STEP 4.

NO – Open circuit in the Gray wire

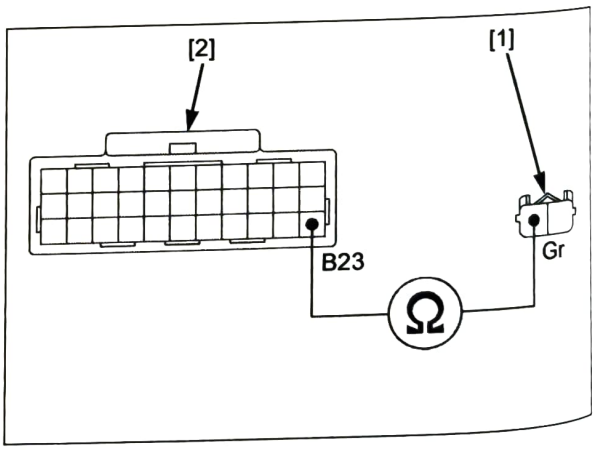

4. **ECT Sensor Inspection**

Replace the ECT sensor with a new one.
Erase the DTC.
Turn the ignition switch ON and wait for 10 seconds.
Check the DTC with MCS.

Is same DTC indicated?

YES – Replace the ECM with a new one, and recheck.

NO – Faulty original ECT sensor

DTC P0122/DTC P0123

Probable cause:

- Faulty TP sensor or its related circuit
- Faulty ECM

Symptom/Fail-safe function:

- Engine operates at idle speed
- HSTC does not operate

1. **TP Sensor 1 Input Voltage Inspection**

Disconnect the TBW unit connector (page 7-11).
Turn the ignition switch ON.
Measure the voltage at the wire harness side TBW unit connector [1].

CONNECTION: Yellow (+) – Light green (–)

Is about 5 V indicated?

YES – GO TO STEP 2.

NO – • Open or short circuit in the Yellow wire
• Open circuit in the Light green wire
• If the wire is OK, replace the ECM with a new one, and recheck.

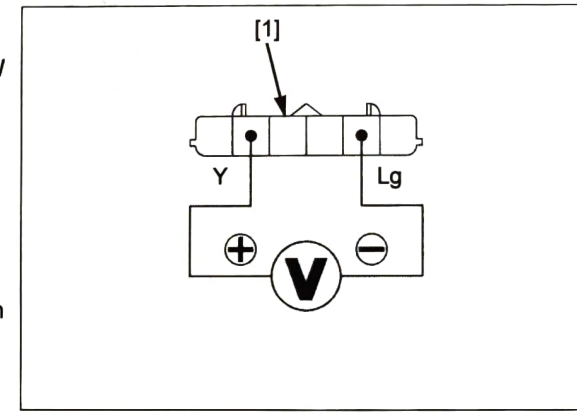

2. **TP Sensor 1 Output Line Open Circuit Inspection**

Disconnect the ECM 33P (Black) connector (page 4-58).
Disconnect the TBW unit connector (page 7-11).
Check for continuity between the wire harness side TBW unit connector [1] and ECM 33P (Black) connector [2].

CONNECTION: Blue/black – B27

Is there continuity?

YES – GO TO STEP 3.

NO – Open circuit in the Blue/black wire

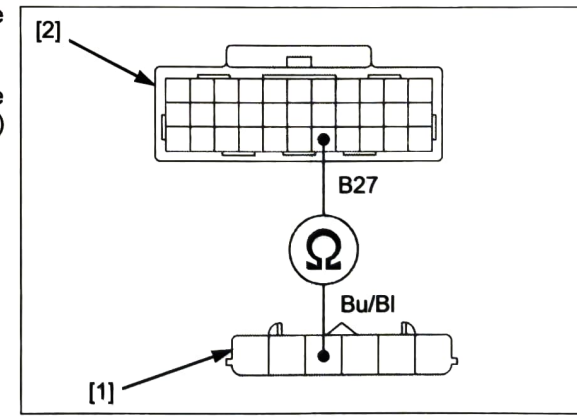

3. **TP Sensor 1 Output Line Short Circuit Inspection**

Check for continuity between the wire harness side TBW unit connector [1] and ground.

CONNECTION: Blue/black – Ground

Is there continuity?

YES – Short circuit in the Blue/black wire

NO – GO TO STEP 4.

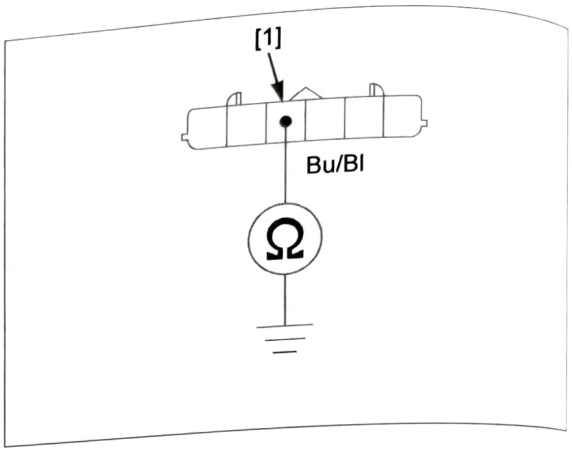

4. **TP Sensor 1 Inspection**

Replace the throttle body (TP sensor).
Connect the disconnected connector(s).
Erase the DTC.
Turn the ignition switch ON and wait for 10 seconds.
Check the DTC with MCS.

Is same DTC indicated?

YES – Replace the ECM with a new one, and recheck.

NO – Faulty original TP sensor

DTC P0131/DTC P0132/DTC P0151/ DTC P0152

Probable cause:

- Faulty A/F sensor or its related circuit
- Faulty ECM

Symptom/Fail-safe function:

- Fuel consumption deterioration
- Detected value feedback stops

1. A/F Sensor Output Line Open Circuit Inspection

Disconnect the A/F sensor connector (page 4-55). Disconnect the ECM connectors:

- A/F sensor 1: ECM 39P connector (page 4-58)
- A/F sensor 2: ECM 33P (Gray) connector (page 4-58)

A/F sensor 1: Check for continuity between the wire harness side A/F sensor connector [1] and ECM 39P connector [2].
A/F sensor 2: Check for continuity between the wire harness side A/F sensor connector [3] and ECM 33P (Gray) connector [4].

CONNECTION:
A/F sensor 1: Black – A25
A/F sensor 2: Black – C32

Is there continuity?

YES – GO TO STEP 2.

NO – Open circuit in the Black wire

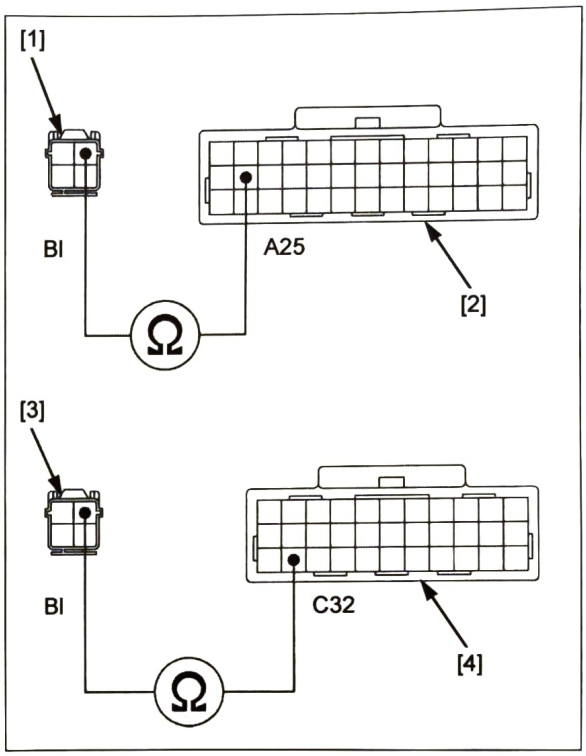

2. A/F Sensor Output Line Short Circuit Inspection

Check for continuity between the wire harness side A/F sensor connector [1] and ground.

CONNECTION: Black – Ground

Is there continuity?

YES – Short circuit in the Black wire

NO – GO TO STEP 3.

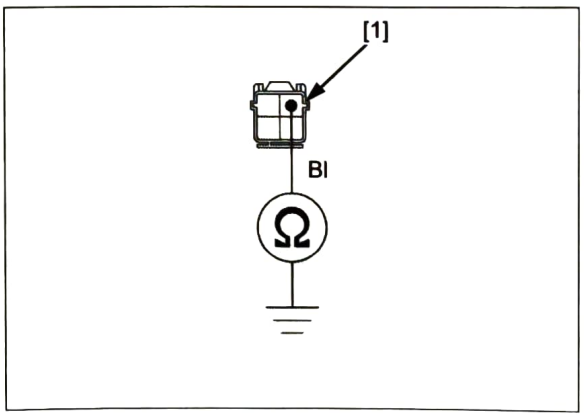

3. A/F Sensor Ground Line Open Circuit Inspection

A/F sensor 1: Check for continuity between the wire harness side A/F sensor connector [1] and ECM 39P connector [2].
A/F sensor 2: Check for continuity between the wire harness side A/F sensor connector [3] and ECM 33P (Gray) connector [4].

CONNECTION:

A/F sensor 1: Gray – A36
A/F sensor 2: Gray – C21

Is there continuity?

YES – GO TO STEP 4.

NO – Open circuit in the Gray wire

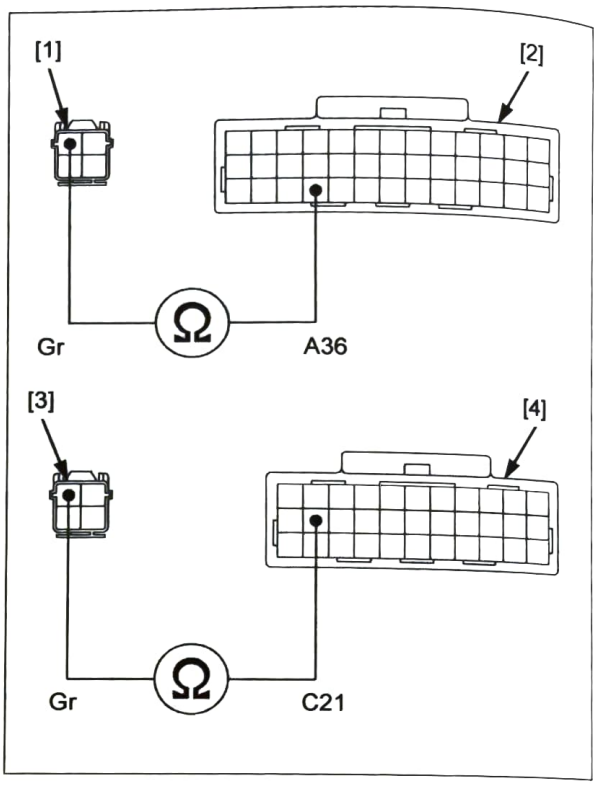

4. A/F sensor Inspection

Replace the A/F sensor with a new one.
Connect the disconnected connector(s).
Erase the DTC.
Start the engine and wait for a minute.
Stop the engine.
Check the DTC with MCS.

Is same DTC indicated?

YES – Replace the ECM with a new one, and recheck.

NO – Faulty original A/F sensor

DTC P0134/DTC P0154

Probable cause:

- Faulty A/F sensor or its related circuit
- Faulty A/F sensor heater or its related circuit
- There is an exhaust leak
- Faulty ECM

Symptom/Fail-safe function:

- Fuel consumption deterioration
- Exhaust gas too lean or too rich
- Driveability deterioration
- Detected value feedback stops

1. A/F sensor Inspection

Replace the A/F sensor with a new one.
Erase the DTC.
Warm up the engine until the coolant temperature is above 50°C (122°F) and keep the engine revolution at 1,600 – 8,100 rpm with no 100 rpm variation a second.
Check the DTC with MCS.

Is same DTC indicated?

YES – Replace the ECM with a new one, and recheck.

NO – Faulty original A/F sensor

DTC P0201/DTC P0202

Probable cause:

- Faulty fuel injector
- Faulty ECM

Symptom/Fail-safe function:

- Engine does not start (Fuel injectors, fuel pump and ignition shut down)

1. Fuel Injector Input Voltage Inspection

Disconnect the fuel injector connector (page 7-13).
Turn the ignition switch ON.
Measure the voltage between the wire harness side fuel injector connector [1] and ground.

CONNECTION: Brown (+) – Ground (–)

Is there battery voltage?

YES – GO TO STEP 2.

NO – Open circuit in the Brown wire

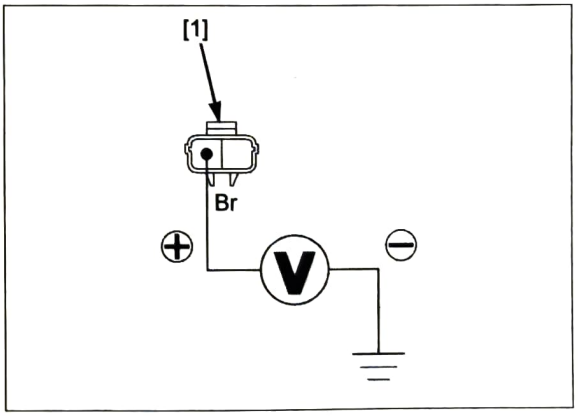

2. Fuel Injector Signal Line Open Circuit Inspection

Disconnect the ECM 33P (Black) connector (page 4-58).
Check for continuity between the wire harness side fuel injector connector [1] and ECM 33P (Black) connector [2].

CONNECTION:
No.1: Blue – B7
No.2: Pink – B8

Is there continuity?

YES – GO TO STEP 3.

NO – • No.1: Open circuit in the Blue wire
• No.2: Open circuit in the Pink wire

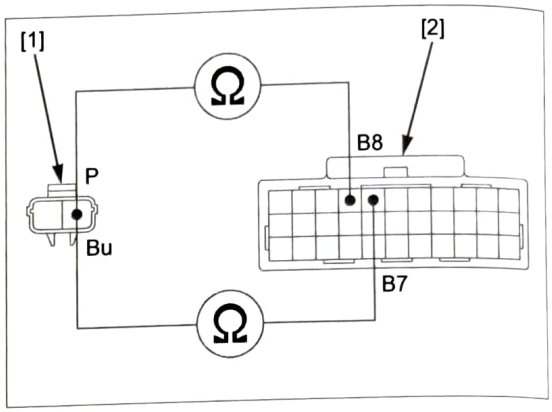

3. Fuel Injector Signal Line Short Circuit Inspection

Check for continuity between the wire harness side fuel injector connector [1] and ground.

CONNECTION:
No.1: Blue – Ground
No.2: Pink – Ground

Is there continuity?

YES – • No.1: Short circuit in the Blue wire
• No.2: Short circuit in the Pink wire

NO – GO TO STEP 4.

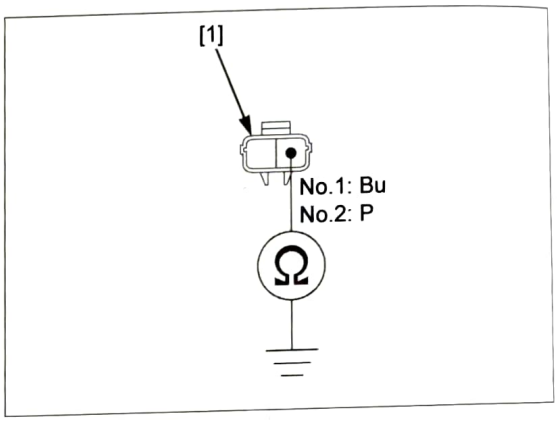

4. Fuel Injector Inspection

Replace the fuel injector with a new one.
Connect the disconnected connector(s).
Erase the DTC.
Turn the ignition switch ON and wait for 10 seconds.
Check the DTC with MCS.

Is same DTC indicated?

YES – Replace the ECM with a new one, and recheck.

NO – Faulty original fuel injector

DTC P0222/DTC P0223

Probable cause:

- Faulty TP sensor or its related circuit
- Faulty ECM

Symptom/Fail-safe function:

- Engine operates at idle speed

1. TP Sensor 2 Input Voltage Inspection

Disconnect the TBW unit connector (page 7-11).
Turn the ignition switch ON.
Measure the voltage at the wire harness side TBW unit connector [1].

CONNECTION: Yellow (+) – Light green (–)

Is about 5 V indicated?

YES – GO TO STEP 2.

NO – • Open or short circuit in the Yellow wire
• Open circuit in the Light green wire
• If the wire is OK, replace the ECM with a new one, and recheck.

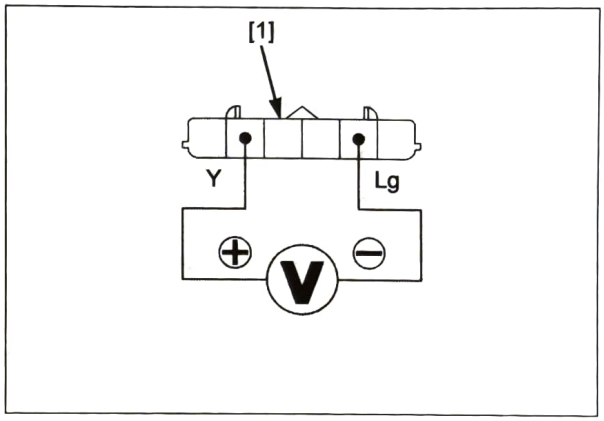

2. TP Sensor 2 Output Line Open Circuit Inspection

Disconnect the ECM 33P (Black) connector (page 4-58).
Check for continuity between the wire harness side TBW unit connector [1] and ECM 33P (Black) connector [2].

CONNECTION: Blue/white – B28

Is there continuity?

YES – GO TO STEP 3.

NO – Open circuit in the Blue/white wire

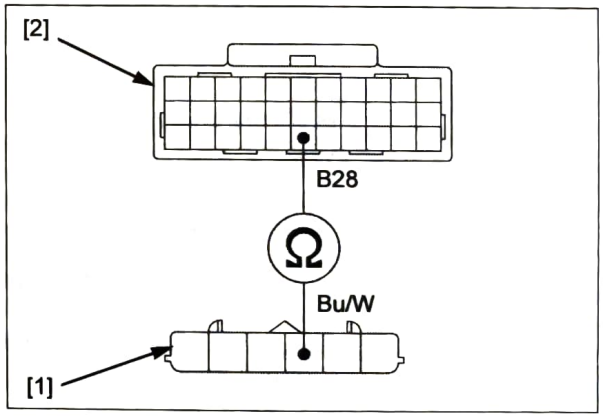

3. TP Sensor 2 Output Line Short Circuit Inspection

Check for continuity between the wire harness side TBW unit connector [1] and ground.

CONNECTION: Blue/white – Ground

Is there continuity?

YES – Short circuit in the Blue/white wire

NO – GO TO STEP 4.

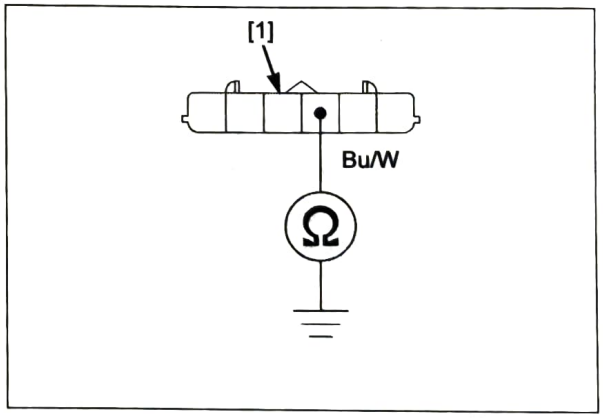

4. **TP Sensor 2 Inspection**

Replace the throttle body (TP sensor).
Connect the disconnected connector(s).
Erase the DTC.
Turn the ignition switch ON and wait for 10 seconds.
Check the DTC with MCS.

Is same DTC indicated?

YES – Replace the ECM with a new one, and recheck.

NO – Faulty original TP Sensor

DTC P0351/DTC P0352

Probable cause:

- Faulty Ignition coil or its related circuit
- Faulty ECM

Symptom/Fail-safe function:

- Fuel injector and ignition coil shut down

1. **Ignition Coil Primary Coil Input Voltage Inspection**

Turn the ignition switch ON.
Measure the voltage between the wire harness side ignition coil wire connector [1] and ground.

CONNECTION:
No.1-1/No.2-1: Brown (+) – Ground (–)
No.1-2/No.2-2: Brown/black (+) – Ground (–)

Is there battery voltage?

YES – GO TO STEP 2.

NO – • No.1-1/No.2-1:
Open circuit in the Brown wire
• No.1-2/No.2-2:
Open circuit in the Brown/black wire

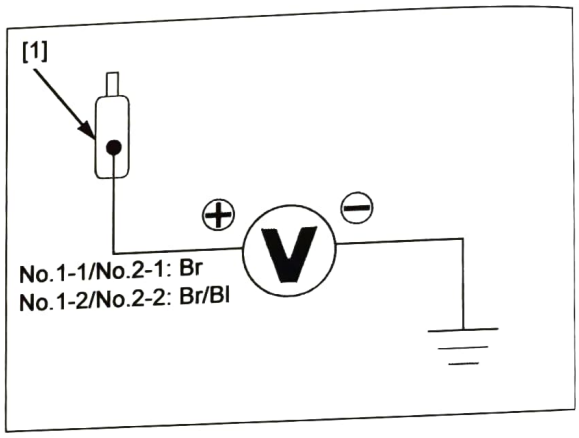

2. **Ignition Coil Primary Coil Signal Line Open Circuit Inspection**

Disconnect the ECM 33P (Black) connector (page 4-58).
Check the continuity between the wire harness side ignition coil wire connector [1] and ECM 33P (Black) connector [2].

CONNECTION:
No.1: Black – B33
No.2: Red – B22

Is there continuity?

YES – GO TO STEP 3.

NO – • No/1:
Open circuit in the Black wire
• No.2:
Open circuit in the Red wire

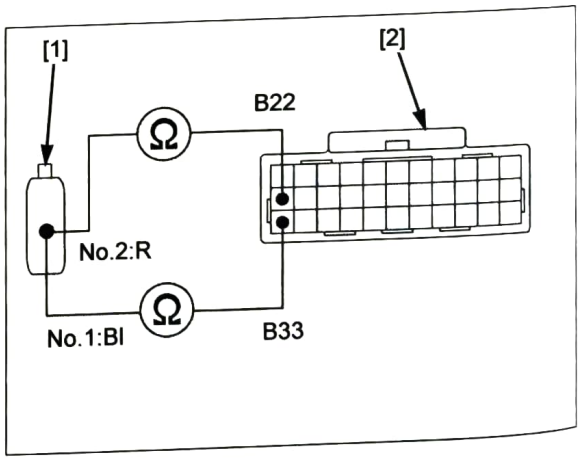

3. **Ignition Coil Primary Coil Signal Line Short Circuit Inspection**

Check for continuity between the wire harness side ignition coil wire connector [1] and ground.

CONNECTION:
No.1: Black – Ground
No.2: Red – Ground

Is there continuity?

YES – • No.1: Short circuit in the Black wire
• No.2: Short circuit in the Red wire

NO – GO TO STEP 4.

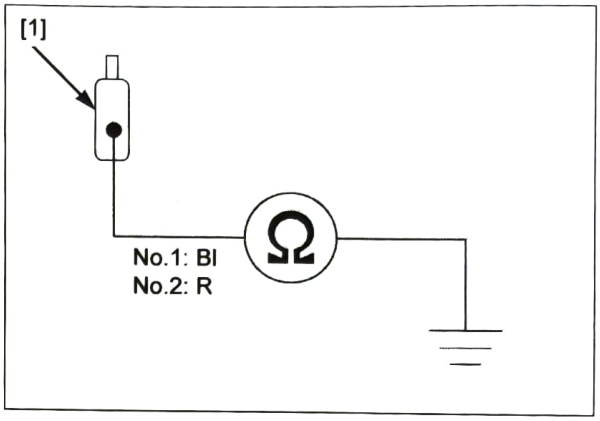

4. **Ignition Coil Primary Peak Voltage Inspection**

Connect the ECM 33P (Black) connector.
Inspect the ignition coil primary peak voltage (page 5-7).

Is the peak voltage normal?

YES – Replace the ECM with a new one, and recheck.

NO – GO TO STEP 5.

5. **Ignition Coil Inspection**

Replace the Ignition coil with a new one.
Connect the disconnected connector(s).
Erase the DTC.
Turn the ignition switch ON and wait for 10 seconds.
Check the DTC with MCS.

Is same DTC indicated?

YES – Replace the ECM with a new one, and recheck.

NO – Faulty original ignition coil

DTC P0412

Probable cause:

- Faulty PAIR control solenoid valve or its related circuit
- Faulty ECM

Symptom/Fail-safe function:

- Engine operates normally

1. **PAIR Control Solenoid Valve Input Voltage Inspection**

Disconnect the PAIR control solenoid valve connector (page 7-15).
Turn the ignition switch ON.
Measure the voltage between the wire harness side PAIR control solenoid valve connector [1] and ground.

CONNECTION: Brown (+) – Ground (–)

Is there battery voltage?

YES – GO TO STEP 2.

NO – Open circuit in the Brown wire

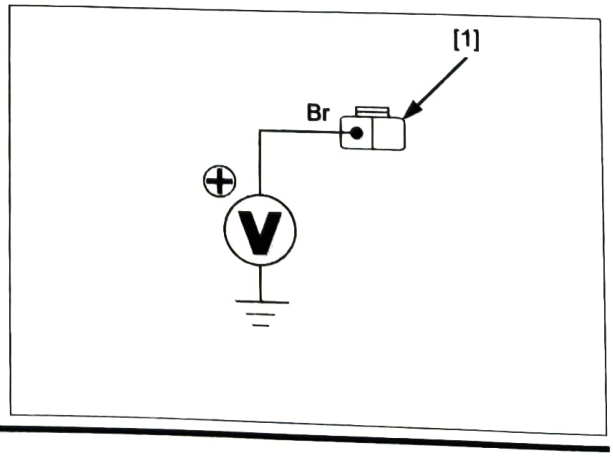

2. **PAIR Control Solenoid Valve Signal Line Open Circuit Inspection**

Disconnect the ECM 33P (Black) connector (page 4-58).
Check for continuity between the wire harness side PAIR control solenoid valve connector [1] and ECM 33P (Black) connector [2].

CONNECTION: Yellow/blue – B2

Is there continuity?

YES – GO TO STEP 3.

NO – Open circuit in the Yellow/blue wire

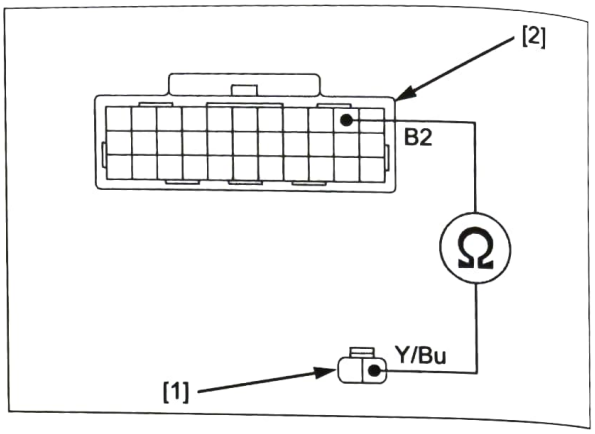

3. **PAIR Control Solenoid Valve Signal Line Short Circuit Inspection**

Check for continuity between the wire harness side PAIR control solenoid valve connector [1] and ground.

CONNECTION: Yellow/blue – Ground

Is there continuity?

YES – Short circuit in the Yellow/blue wire

NO – GO TO STEP 4.

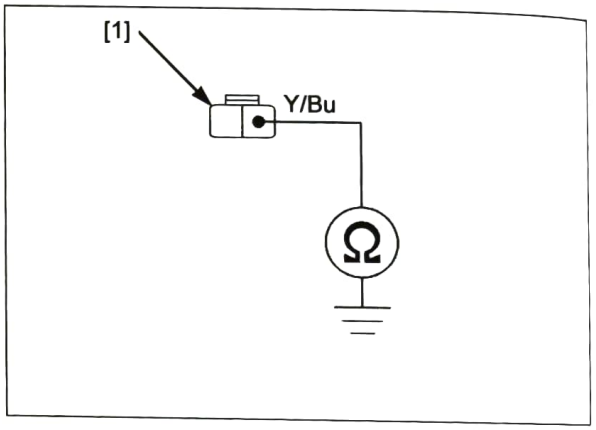

4. **PAIR Control Solenoid Valve Inspection**

Replace the PAIR control solenoid valve with a new one.
Connect the disconnected connector(s).
Erase the DTC.
Turn the ignition switch ON and wait for 10 seconds.
Check the DTC with MCS.

Is same DTC indicated?

YES – Replace the ECM with a new one, and recheck.

NO – Faulty original PAIR control solenoid valve

DTC P0443

Probable cause:

- Faulty EVAP purge control solenoid valve or its related circuit
- Faulty ECM

Symptom/Fail-safe function:

- Engine operates normally

1. EVAP Purge Control Solenoid Valve Input Voltage Inspection

Disconnect the EVAP purge control solenoid valve connector (page 7-18).
Turn the ignition switch ON.
Measure the voltage between the wire harness side EVAP purge control solenoid valve connector [1] and ground.

CONNECTION: Brown (+) – Ground (–)

Is there battery voltage?

YES – GO TO STEP 2.

NO – Open circuit in the Brown wire

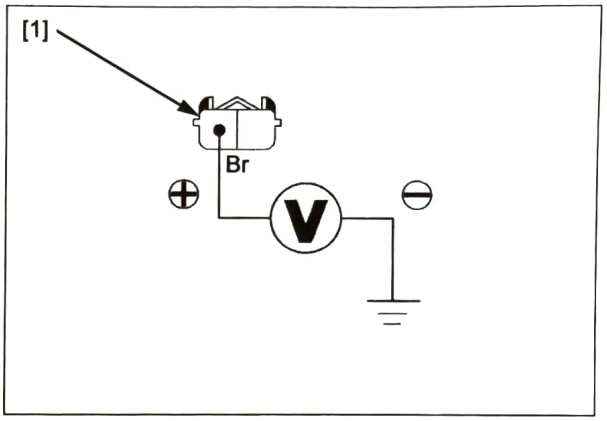

2. EVAP Purge Control Solenoid Valve Signal Line Open Circuit Inspection

Disconnect the ECM 33P (Black) connector (page 4-58).
Check for continuity between the wire harness side EVAP purge control solenoid valve connector [1] and ECM 33P (Black) connector [2].

CONNECTION: Yellow – B1

Is there continuity?

YES – GO TO STEP 3.

NO – Open circuit in the Yellow wire

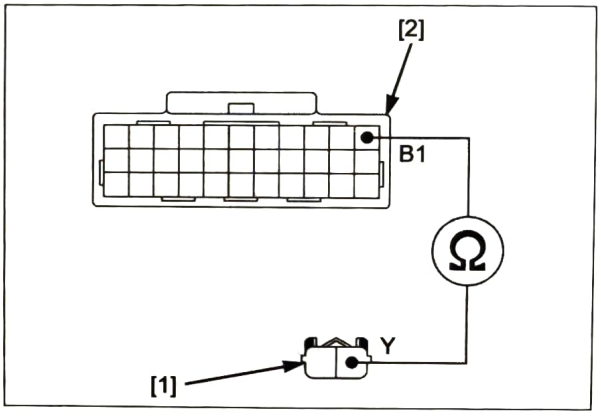

3. EVAP Purge Control Solenoid Valve Signal Line Short Circuit Inspection

Check for continuity between the wire harness side EVAP purge control solenoid valve connector [1] and ground.

CONNECTION: Yellow – Ground

Is there continuity?

YES – Short circuit in the Yellow wire

NO – GO TO STEP 4.

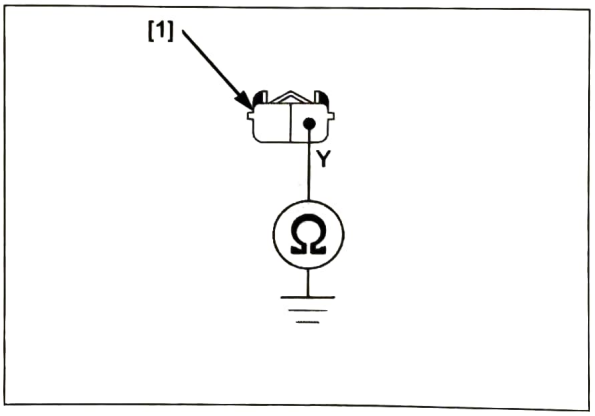

4. **EVAP Purge Control Solenoid Valve Inspection**

Replace the EVAP purge control solenoid valve with a new one.
Connect the disconnected connector(s).
Erase the DTC.
Turn the ignition switch ON and wait for 10 seconds.
Check the DTC with MCS.

Is same DTC indicated?

YES – Replace the ECM with a new one, and recheck.

NO – Faulty original EVAP purge solenoid valve

DTC P0500

Probable cause:

- Faulty front wheel speed sensor or its related circuit
- ABS modulator has DTC (CAN lines included)
- Faulty ECM

Symptom/Fail-safe function:

- Engine operates normally

NOTE:

- When other DTC is displayed, together with P0500, troubleshoot it first.

1. **Front Wheel Speed Sensor Signal Output Line Open Circuit Inspection**

Disconnect the following:

– ABS modulator connector (page 20-25)
– ECM 33P (Black) connector (page 4-58)

Check for continuity between the wire harness side ABS modulator connector [1] and ECM 33P (Black) connector [2].

CONNECTION: Blue/yellow – B14

Is there continuity?

YES – GO TO STEP 2.

NO – Open circuit in the Blue/yellow wire

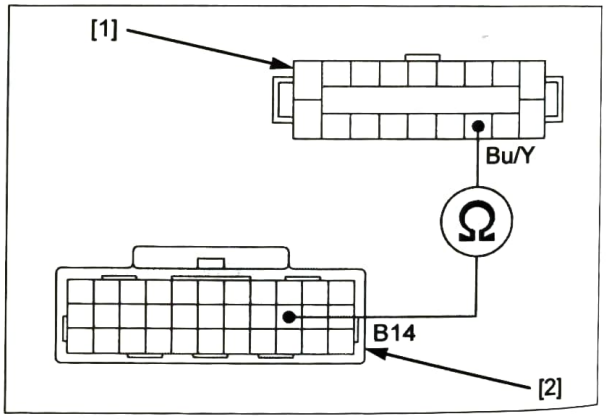

2. **Front Wheel Speed Sensor Signal Output Line Short Circuit Inspection**

Check for continuity between the wire harness side ECM 33P (Black) connector [1] and ground.

CONNECTION: B14 – Ground

Is there continuity?

YES – Short circuit in the Blue/yellow wire

NO – GO TO STEP 3.

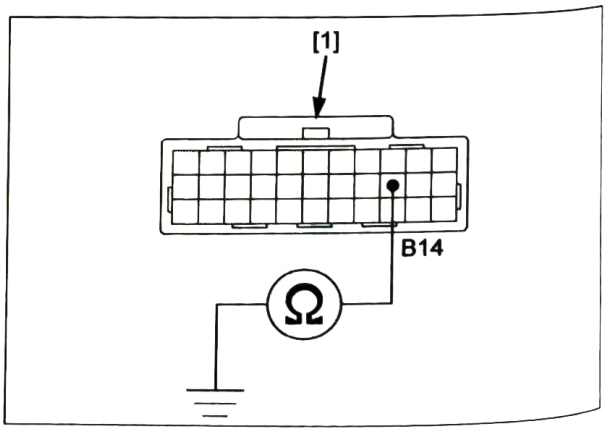

3. **ECM Inspection**

Replace the ECM with a new one.
Connect the disconnected connector(s).
Erase the DTC.
Perform the test ride (page 4-16).
Check the DTC with MCS.

Is same DTC indicated?

YES – Replace the ABS modulator with a new one, and recheck.

NO – Faulty original ECM

DTC P0562/DTC P0686/DTC P0687

Probable cause:

- Faulty sub VB relay or its related circuit
- Blown sub fuse SUB VB 10 A
- Blown MAIN2 30 A fuse
- Faulty TCM
- Faulty ECM

Symptom/Fail-safe function:

- Engine operates normally

1. **Sub VB Relay Power Supply Voltage Inspection**

Remove the sub VB relay (page 4-65).
Turn the ignition switch ON.
Measure the voltage at the wire harness (fuse/relay box) side sub VB relay connector [1].

CONNECTION: Red/white (+) – Green (–)

Is there battery voltage?

YES – GO TO STEP 2.

NO – • Open circuit in the Red/white wire
• Open circuit in the Green wire

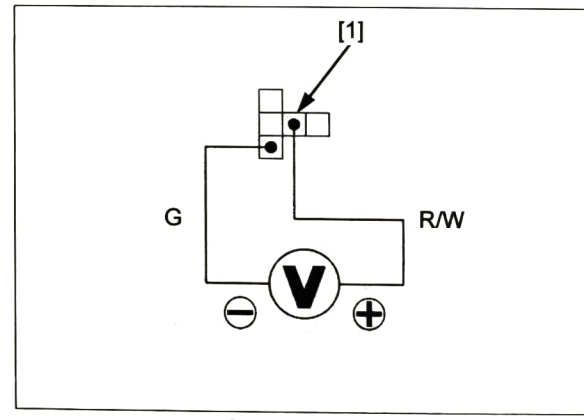

2. **Sub VB Relay Coil Line Open Circuit Inspection**

Turn the ignition switch OFF.
Remove the sub VB relay (page 4-65).
Disconnect the ECM 39P connector (page 4-58).
Check for continuity between the wire harness side sub VB relay connector [1] and ECM 39P connector [2].

CONNECTION: Violet/yellow – A27

Is there continuity?

YES – GO TO STEP 3.

NO – Open circuit in the Violet/yellow wire

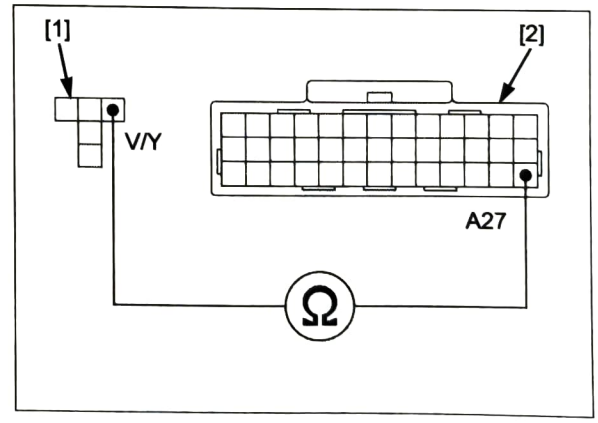

3. **Sub VB Relay Line Open Circuit Inspection**

Check for continuity between the wire harness side sub VB relay connector [1] and ECM 39P connector [2].

CONNECTION: Violet – A8

Is there continuity?

YES – GO TO STEP 4.

NO – Open circuit in the Violet wire

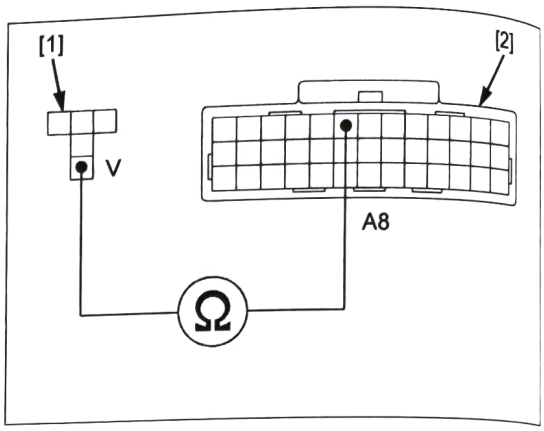

4. **Sub VB Relay Inspection**

Replace the sub VB relay with a new one.
Connect the disconnected connector(s).
Erase the DTC.
Turn the ignition switch ON and wait for 10 seconds.
Check the DTC with MCS.

Is same DTC indicated?

YES – • Faulty TCM
• Faulty ECM

NO – Faulty original sub VB relay

DTC P0606

Probable cause:

- Faulty ECM

Symptom/Fail-safe function:

- Hard to start

Diagnostic procedure:

1. Replace the ECM with a new one.
2. Erase the DTC.
3. Turn the ignition switch ON and wait for 10 seconds.
4. Check the DTC with MCS.
5. If the same DTC is not indicated, faulty original ECM.

DTC P062F

Probable cause:

- Faulty ECM

Symptom/Fail-safe function:

- Hard to start
- Does not hold the self-diagnosis data
  - The MIL does not come on (the DTC can be readout and erased only by MCS).

Diagnostic procedure:

1. Replace the ECM with a new one.
2. Erase the DTC.
3. Turn the ignition switch ON and wait for 10 seconds.
4. Check the DTC with MCS.
5. If the same DTC is not indicated, faulty original ECM.

DTC P064D/DTC P064E

Probable cause:

- Faulty A/F sensor or its related circuit
- Faulty ECM

Symptom/Fail-safe function:

- Fuel consumption deterioration
- Driveability deterioration

1. A/F Sensor Inspection

Replace the A/F sensor with a new one.
Erase the DTC.
Turn the ignition switch ON and wait for 10 seconds or start the engine and wait a minute.
Check the DTC with MCS.

Is same DTC indicated?

YES – Replace the ECM with a new one, and recheck.

NO – Faulty original A/F sensor

DTC P0722

Probable cause:
- Faulty VS sensor or its circuit
- Faulty ECM

Symptom/Fail-safe function:
- Engine operates normally

1. VS Sensor Ground Line Open Circuit Inspection

Disconnect the VS sensor connector (page 4-60).
Check for continuity between the wire harness side VS sensor connector [1] and ground.

CONNECTION: Green – Ground

Is there continuity?

YES – GO TO STEP 2.

NO – Open circuit in the Green wire

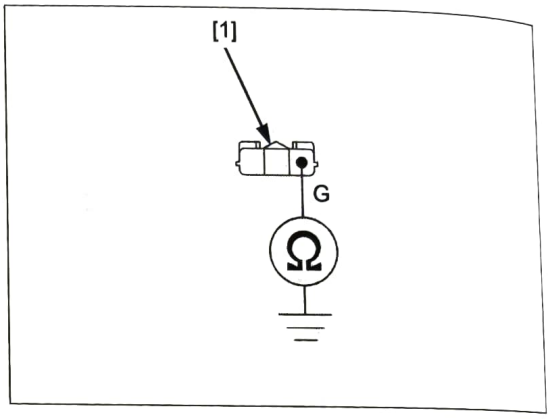

2. VS Sensor Input Line Open Circuit Inspection

Temporarily install the removed electrical parts in the reverse order of removal.
Turn the ignition switch ON.
Measure the voltage between the wire harness side VS sensor connector [1] and ground.

CONNECTION: Black (+) – Green (–)

Is there battery voltage?

YES – GO TO STEP 3.

NO – Open circuit in the Black wire or its related circuit

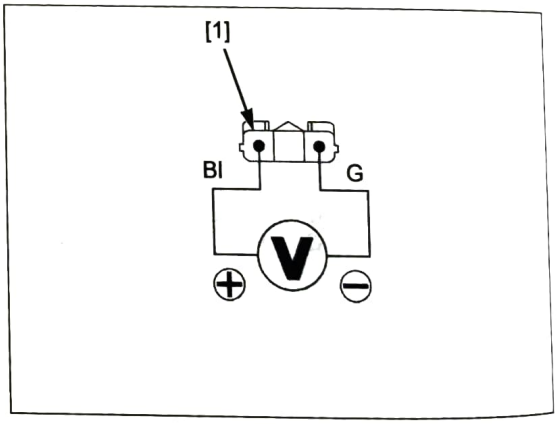

3. VS Sensor Signal Line Short Circuit Inspection

Check for continuity between the wire harness side VS sensor connector [1] and ground.

CONNECTION: Pink – Ground

Is there continuity?

YES – Short circuit in the Pink wire

NO – GO TO STEP 4.

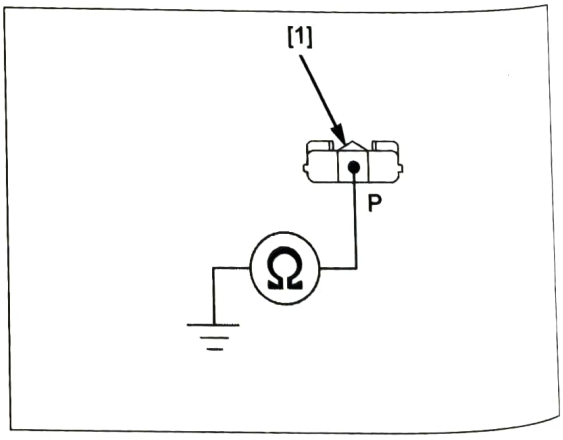

4. **VS Sensor Signal Line Open Circuit Inspection**

Disconnect the ECM 33P (Gray) connector (page 4-58).
Check for continuity between the wire harness side VS sensor connector [1] and ECM 33P (Gray) connector [2].

CONNECTION: Pink – C16

Is there continuity?

YES – GO TO STEP 5.

NO – Open circuit in the Pink wire

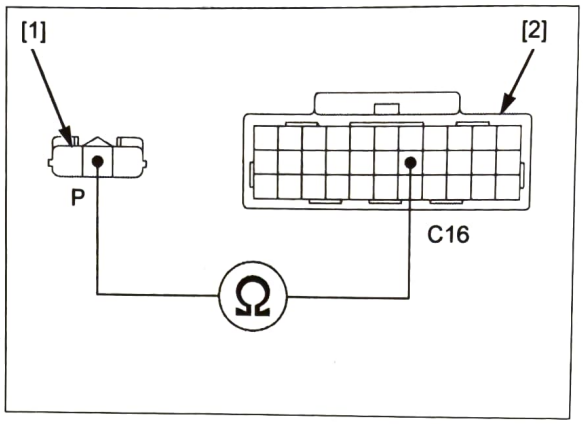

5. **VS Sensor Inspection**

Replace the VS sensor with a new one.
Connect the disconnected connector(s).
Erase the DTC.
Perform the test ride (page 4-16).
Check the DTC with MCS.

Is same DTC indicated?

YES – Replace the ECM with a new one, and recheck.

NO – Faulty original VS sensor

DTC P1000 (BANK ANGLE SENSOR LOW VOLTAGE)

- Before starting the inspection, check for loose or poor contact on the bank angle sensor 2P (Black) and ECM 39P (Black) connector, and recheck the DTC.

1. **Bank Angle Sensor System Inspection**

Erase the DTC (page 4-8).
Check the bank angle sensor with the MCS or GST.

Is about 0 V indicated?

YES – GO TO STEP 2.

NO – Intermittent failure

2. **Bank Angle Sensor Signal Line Short Circuit Inspection**

Turn the ignition switch OFF.
Disconnect the following:

- Bank angle sensor 2P (Black) connector (page 4-60).
- ECM 39P (Black) connector (page 4-58)

Check for continuity between the wire harness side bank angle sensor 2P (Black) connector [1] terminal and ground.

CONNECTION: Red – Ground

Is there continuity?

YES – Short circuit in the Red wire

NO – GO TO STEP 3.

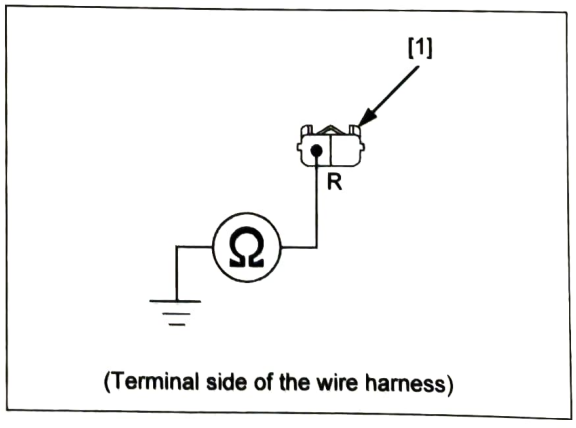

3. **Bank Angle Sensor Signal Line Open Circuit Inspection**

Check for continuity between the wire harness side bank angle sensor 2P (Black) connector [1] and ECM 39P (Black) connector [2] terminals.

TOOL:
Test probe **07ZAJ-RDJA110**

CONNECTION: Red – A37

Is there continuity?

YES – GO TO STEP 4.

NO – Open circuit in the Red wire

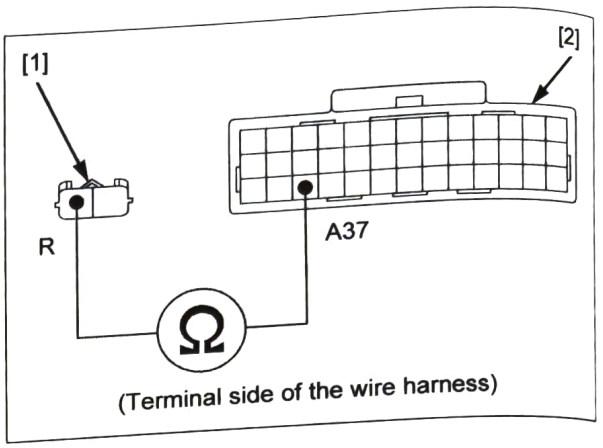

4. **Bank Angle Sensor Input Voltage Inspection**

Temporarily install the ECM to the wire harness by connecting the 39P (Black) connector.
Turn the ignition switch ON with the engine stop switch "○".
Measure the voltage between the wire harness side bank angle sensor 2P (Black) connector [1] terminal and ground.

CONNECTION: Br (+) – Ground (–)

Is there battery voltage?

YES – GO TO STEP 5.

NO – Open circuit in Brown wire

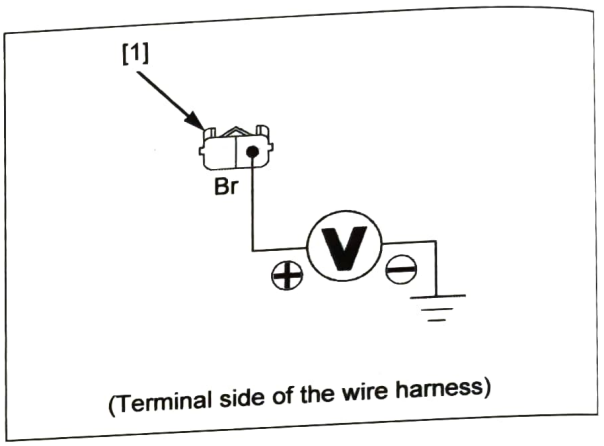

5. **Bank Angle Sensor Inspection**

Check the bank angle sensor (page 4-60).

Is the bank angle sensor normal?

YES – Replace the ECM with a known good one, and recheck.

NO – Faulty bank angle sensor

DTC P1001 (BANK ANGLE SENSOR HIGH VOLTAGE)

1. **Bank Angle Sensor System Inspection**

   Erase the DTC (page 4-8).
   Check the bank angle sensor with the MCS or GST.

   Is about 5 V indicated?

   YES – GO TO STEP 2.

   NO – Intermittent failure

2. **Bank Angle Sensor Inspection**

   Replace the bank angle sensor with a known good one (page 4-60).
   Erase the DTC (page 4-8).
   Check the bank angle sensor with the MCS or GST.

   Is P1001 indicated?

   YES – Replace the ECM with a known good one, and recheck.

   NO – Faulty original bank angle sensor

DTC P1658/DTC P1659

Probable cause:

- Faulty TBW relay or its related circuit
- Blown sub fuse TBW 10 A
- Faulty ECM

Symptom/Fail-safe function:

- Engine operates normally

1. **TBW Relay Input Voltage Inspection**

   Remove the TBW relay (page 4-64).
   Measure the voltage at the wire harness (fuse/relay box) side TBW relay connector [1].

   CONNECTION: Beige (+) – Green (–)

   Is there battery voltage?

   YES – GO TO STEP 2.

   NO – • Open circuit in the Beige wire
   • Open circuit in the Green wire

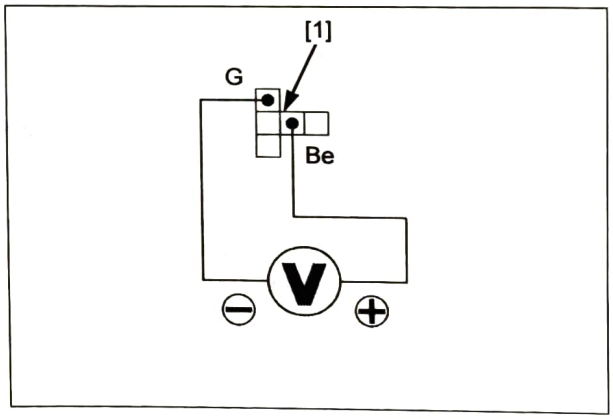

2. **TBW Relay Line Open Circuit Inspection**

   Disconnect the ECM 39P and ECM 33P (Gray) connectors (page 4-58).
   Check for continuity between the wire harness side TBW relay connector [1] and ECM 39P connector [2]/ECM 33P (Gray) connector [3].

   CONNECTION:
   Brown – A1
   Pink – C10

   Is there continuity?

   YES – GO TO STEP 3.

   NO – • Open circuit in the Brown wire
   • Open circuit in the Pink wire

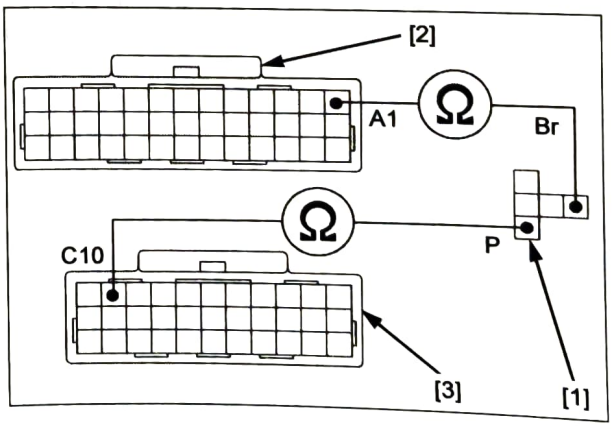

3. **TBW Relay Line Short Circuit Inspection**

Check for continuity between the wire harness side TBW relay connector [1] and ground.

CONNECTION:
Brown – Ground
Pink – Ground

Is there continuity?

YES – • Short circuit in the Brown wire
• Short circuit in the Pink wire

NO – GO TO STEP 4.

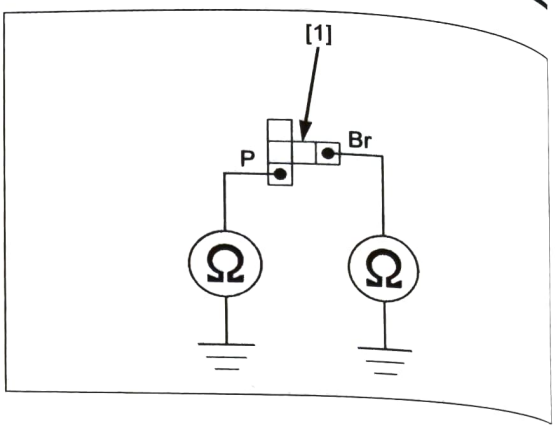

4. **TBW Relay Inspection**

Replace the TBW relay with a new one.
Connect the disconnected connector(s).
Erase the DTC.
Turn the ignition switch ON and wait for 10 seconds.
Check the DTC with MCS.

Is same DTC indicated?

YES – Replace the ECM with a new one, and recheck.

NO – Faulty original TBW relay

DTC P1702/DTC P1703 (M/T type)

Probable cause:

- Faulty GP sensor or its related circuit
- Faulty ECM

Symptom/Fail-safe function:

- Engine operates normally

1. **GP Sensor Input Voltage Inspection**

Disconnect the GP sensor connector (page 4-61).
Turn the ignition switch ON.
Measure the voltage at the wire harness side GP sensor connector [1].

CONNECTION: Yellow (+) – Gray (–)

Is the voltage within 4.75 – 5.25 V?

YES – GO TO STEP 2.

NO – • Open or short circuit in the Yellow wire
• Open circuit in the Gray wire
• If the wire is OK, replace the ECM with a new one, and recheck.

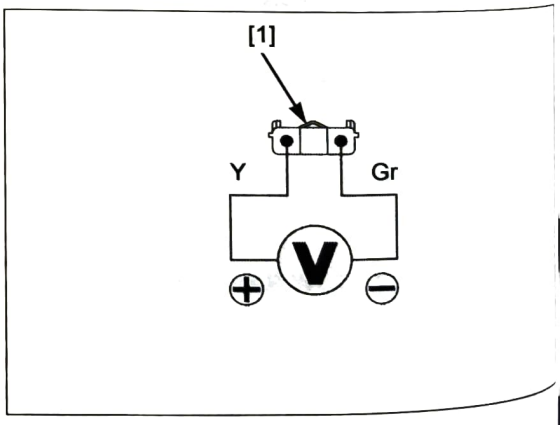

2. **GP Sensor Signal Line Open Circuit Inspection**

Disconnect the ECM 33P (Black) connector (page 4-58).
Check for continuity between the wire harness side GP sensor connector [1] and ECM 33P (Black) connector [2].

CONNECTION: White – B30

Is there continuity?

YES – GO TO STEP 3.

NO – Open circuit in the White wire

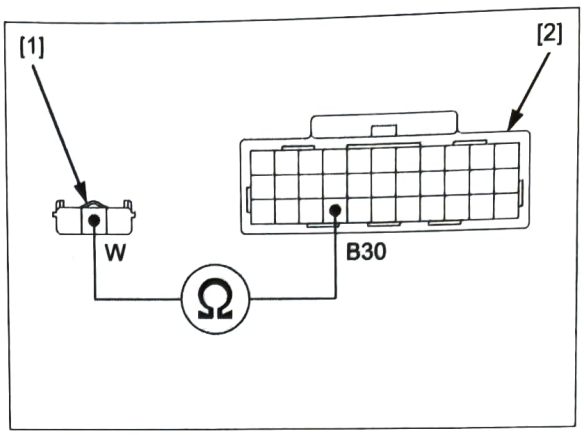

3. **GP Sensor Output Line Short Circuit Inspection**

Check for continuity between the wire harness side GP sensor connector [1] and ground.

CONNECTION: White – Ground

Is there continuity?

YES – Short circuit in the White wire

NO – GO TO STEP 4.

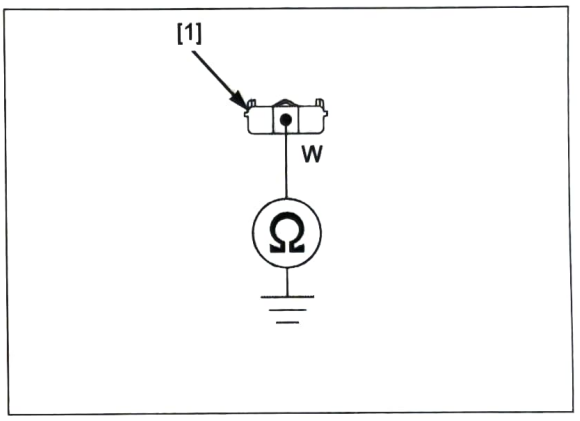

4. **GP Sensor Inspection**

Replace the GP sensor with a new one.
Connect the disconnected connector(s).
Erase the DTC.
Turn the ignition switch ON and wait for 10 seconds.
Check the DTC with MCS.

Is same DTC indicated?

YES – Replace the ECM with a new one, and recheck.

NO – Faulty original GP sensor

DTC P1712 (DCT type)

Probable cause:

- Faulty TCM or its related circuit
- Faulty ECM

Symptom/Fail-safe function:

- Gearshift function does not work

1. **TCM Inspection**

Replace the TCM with a new one.
Erase the DTC.
Turn the ignition switch ON and wait for 10 seconds.
Check the DTC with MCS.

Is same DTC indicated?

YES – Replace the ECM with a new one, and recheck.

NO – Faulty original TCM

DTC P2101/DTC P2118

Probable cause:

- Faulty TBW motor or its related circuit
- Faulty ECM

Symptom/Fail-safe function:

- Engine operates at idle speed
- HSTC does not operate

1. TBW Motor Line Open Circuit Inspection

Disconnect the TBW motor connector (page 7-11).
Disconnect the ECM 33P (Black) connector (page 4-58).
Check for continuity between the wire harness side TBW motor connector [1] and ECM 33P (Black) connector [2].

CONNECTION:
Red – B3
Blue – B4

Is there continuity?

YES – GO TO STEP 2.

NO – • Open circuit in the Red wire
• Open circuit in the Blue wire

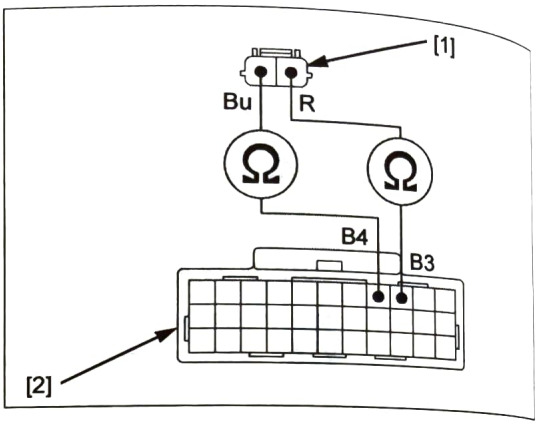

2. TBW Motor Line Short Circuit Inspection 1

Check for continuity between the wire harness side TBW motor connector [1] and ground.

CONNECTION:
Red – Ground
Blue – Ground

Is there continuity?

YES – • Short circuit in the Red wire
• Short circuit in the Blue wire

NO – GO TO STEP 3.

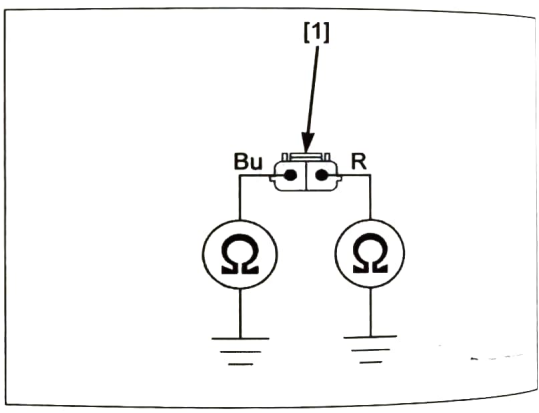

3. TBW Motor Inspection

Replace the throttle body (TBW motor).
Connect the disconnected connector(s).
Erase the DTC.
Turn the ignition switch ON and wait for 10 seconds.
Check the DTC with MCS.

Is same DTC indicated?

YES – Replace the ECM with a new one, and recheck.

NO – Faulty original TBW motor

DTC P2122/DTC P2123

Probable cause:

- Faulty APS 1 or its related circuit
- Faulty ECM

Symptom/Fail-safe function:

- Engine operates at idle speed

1. APS 1 Input Voltage Inspection

Disconnect the grip APS connector (page 22-20).
Turn the ignition switch ON.
Measure the voltage at the wire harness side grip APS connector [1].

CONNECTION: Black (+) – Pink (–)

Is about 5 V indicated?

YES – GO TO STEP 2.

NO – • Open circuit in the Black wire
• Open circuit in the Pink wire
• If the wires are OK, replace the ECM with a new one, and recheck.

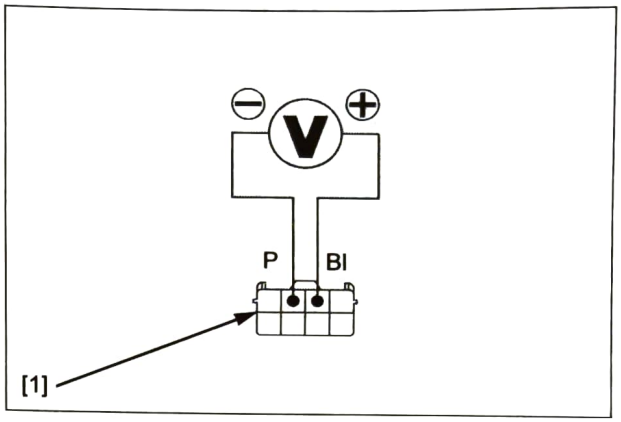

2. APS 1 Output Line Open Circuit Inspection

Disconnect the ECM 39P (Black) connector (page 4-58).
Check for continuity between the wire harness side grip APS connector [1] and ECM 39P (Black) connector [2].

CONNECTION: Blue – A26

Is there continuity?

YES – Open circuit in the Blue wire

NO – GO TO STEP 3.

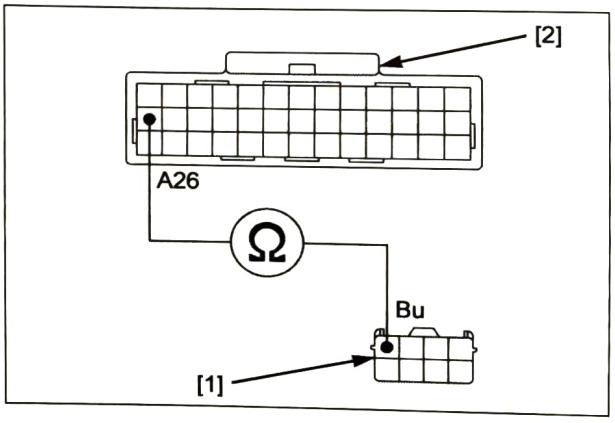

3. APS 1 Output Line Short Circuit Inspection

Check for continuity between the wire harness side grip APS connector [1] and ground.

CONNECTION: Blue – Ground

Is there continuity?

YES – Short circuit in the Blue wire

NO – GO TO STEP 4.

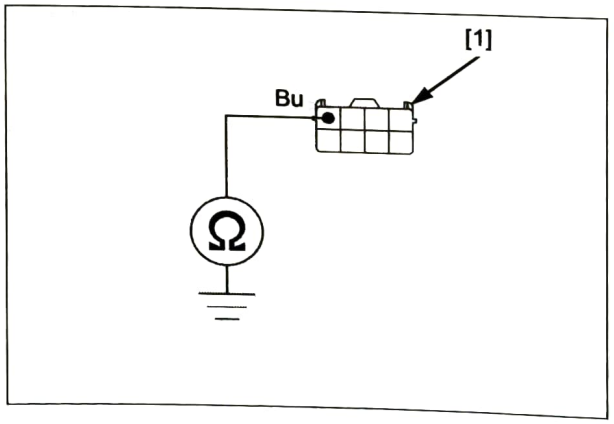

4. **APS 1 Inspection**

Replace the grip APS (right handlebar switch).
Connect the disconnected connector(s).
Erase the DTC.
Turn the ignition switch ON and wait for 10 seconds.
Check the DTC with MCS.

Is same DTC indicated?

YES – Replace the ECM with a new one, and recheck.

NO – Faulty original APS

DTC P2127/DTC P2128

Probable cause:

- Faulty APS 2 or its related circuit
- Faulty ECM

Symptom/Fail-safe function:

- Engine operates at idle speed

1. **APS 2 Input Voltage Inspection**

Disconnect the grip APS connector (page 22-20).
Turn the ignition switch ON.
Measure the voltage at the wire harness side grip APS connector [1].

CONNECTION: White (+) – Gray (–)

Is about 5 V indicated?

YES – GO TO STEP 2.

NO – • Open circuit in the White wire
• Open circuit in the Gray wire
• If the wires are OK, replace the ECM with a new one, and recheck.

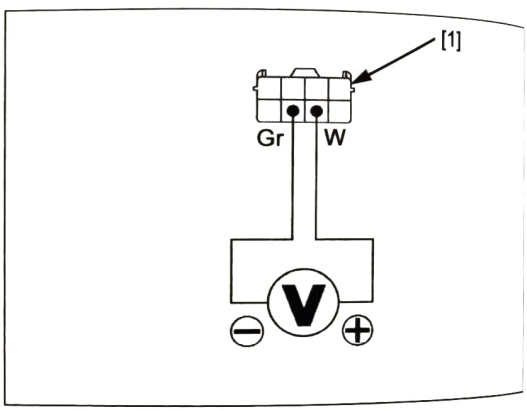

2. **APS 2 Output Line Open Circuit Inspection**

Disconnect the ECM 39P connector (page 4-58).
Check for continuity between the wire harness side grip APS connector [1] and ECM 39P connector [2].

CONNECTION: Yellow – A38

Is there continuity?

YES – GO TO STEP 3.

NO – Open circuit in the Yellow wire

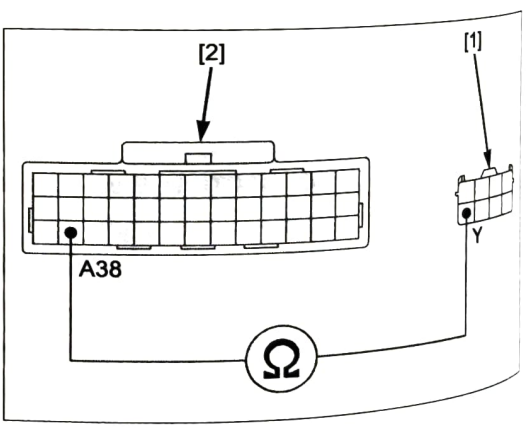

3. **APS 2 Output Line Short Circuit Inspection**

Check for continuity between the wire harness side grip APS connector [1] and ground.

CONNECTION: Yellow – Ground

Is there continuity?

YES – Short circuit in the Yellow wire

NO – GO TO STEP 4.

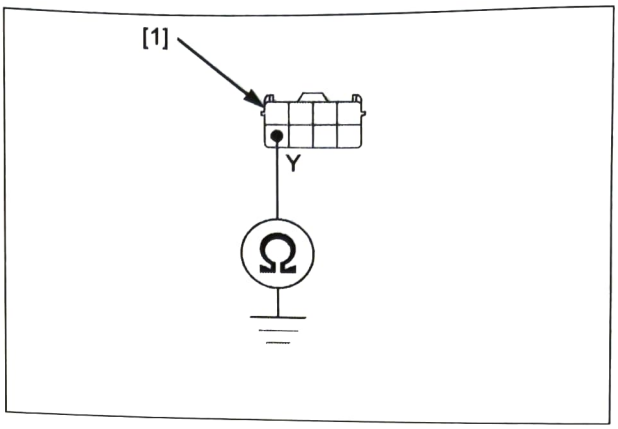

4. **APS 2 Inspection**

Replace the grip APS (right handlebar switch).
Connect the disconnected connector(s).
Erase the DTC.
Turn the ignition switch ON and wait for 10 seconds.
Check the DTC with MCS.

Is same DTC indicated?

YES – Replace the ECM with a new one, and recheck.

NO – Faulty original grip APS

DTC P2135

Probable cause:

- Faulty TP sensor or its related circuit
- Faulty ECM

Symptom/Fail-safe function:

- Engine operates at idle speed

NOTE:

- When other DTC is displayed, together with P0500, troubleshoot it first.
- Clean the throttle bores and valves carefully. (Do not apply commercially available carburetor cleaners to the inside of the throttle bore, because it is coated with molybdenum.)

1. **TP Sensor Line Short Circuit Inspection**

Disconnect the ECM 33P (Black) connector (page 4-58).
Disconnect the TBW unit connector (page 7-11).
Check for continuity at the wire harness side TBW unit connector [1].

CONNECTION: Blue/black – Blue/white

Is there no continuity?

YES – GO TO STEP 2.

NO – Short circuit of the Blue/black-to-Blue/white wire

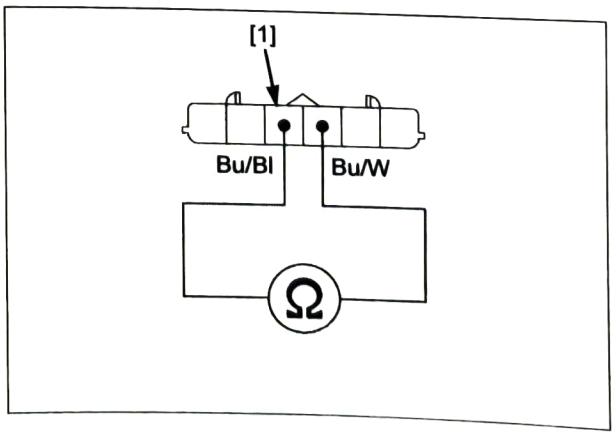

2. TP Sensor Inspection

Replace the throttle body (TP sensor).
Connect the disconnected connector(s).
Erase the DTC.
Turn the ignition switch ON and wait for 10 seconds.
Check the DTC with MCS.

Is same DTC indicated?

YES – Replace the ECM with a new one, and recheck.

NO – Faulty original TP sensor

DTC P2138

Probable cause:

- Faulty APS 1 and/or APS 2 or its related circuit
- Faulty ECM

Symptom/Fail-safe function:

- Engine operates at idle speed

1. APS Line Short Circuit Inspection

Disconnect the ECM 39P connector (page 4-58).
Disconnect the grip APS connector (page 22-20).
Check for continuity at the wire harness side APS connector [1].

CONNECTION: Blue – Yellow

Is there continuity?

YES – GO TO STEP 2.

NO – Short circuit of the Blue wire-to-Yellow wire

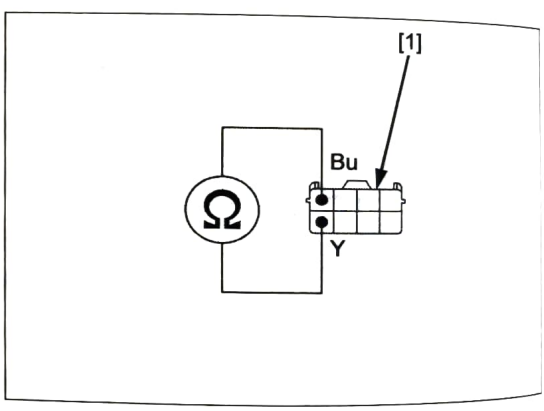

2. APS Inspection

Replace the grip APS (right handlebar switch).
Connect the disconnected connector(s).
Erase the DTC.
Turn the ignition switch ON and wait for 10 seconds.
Check the DTC with MCS.

Is same DTC indicated?

YES – Replace the ECM with a new one, and recheck.

NO – Faulty original APS

Probable cause:

- Faulty rear wheel speed sensor or its related circuit
- ABS modulator has DTC (CAN lines included)
- Faulty ECM

Symptom/Fail-safe function:

- Engine operates normally
- HSTC does not operate

NOTE:

- When other DTC is displayed together with P2158, troubleshoot it first.

1. **Rear Wheel Speed Sensor Signal Output Line Open Circuit Inspection**

   Disconnect the following:

   – ABS modulator connector (page 20-25)
   – ECM 33P (Black) connector (page 4-58)

   Check for continuity between the wire harness side ABS modulator connector [1] and ECM 33P (Black) connector [2].

   CONNECTION: 3 – B15

   Is there continuity?

   YES – GO TO STEP 2.

   NO – Open circuit in the Blue/black wire

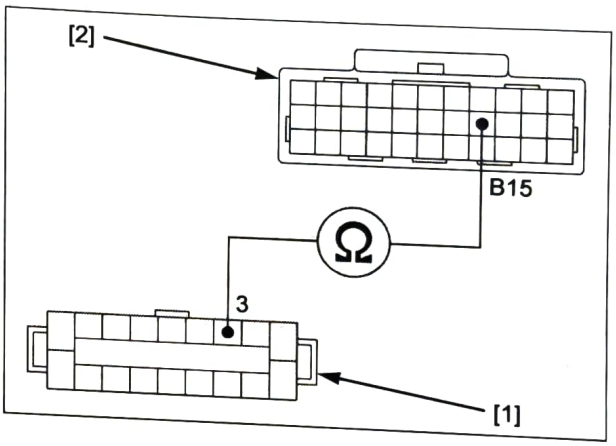

2. **Rear Wheel Speed Sensor Signal Output Line Short Circuit Inspection**

   Check for continuity between the wire harness side ECM 33P (Black) connector [1] and ground.

   CONNECTION: B15 – Ground

   Is there continuity?

   YES – Short circuit in the Blue/black wire

   NO – GO TO STEP 3.

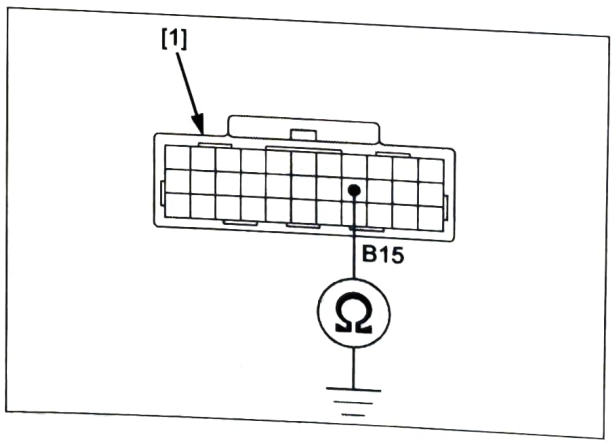

3. **ECM Inspection**

Replace the ECM with a new one.
Connect the disconnected connector(s).
Erase the DTC.
Perform the test ride (page 4-16).
Check the DTC with MCS.

Is same DTC indicated?

YES – Replace the ABS modulator with a new one, and recheck.

NO – Faulty original ECM

DTC U0001

NOTE:

- When other DTC is displayed, together with U0001, troubleshoot it first.

Probable cause:

- Faulty CAN line(s)
- Faulty CAN connected unit(s)

Symptom/Fail-safe function:

- CAN communication failure

1. **CAN Line (ECM-to-TCM) Open Circuit Inspection**

Disconnect the following:

– ECM 39P (Black) connector (page 4-58)
– TCM 33P (Gray) connector (page 13-63)

Check the continuity between the wire harness side ECM 39P (Black) connector [1] and TCM 33P (Gray) connector [2].

CONNECTION:
A31 – B13
A30 – B2

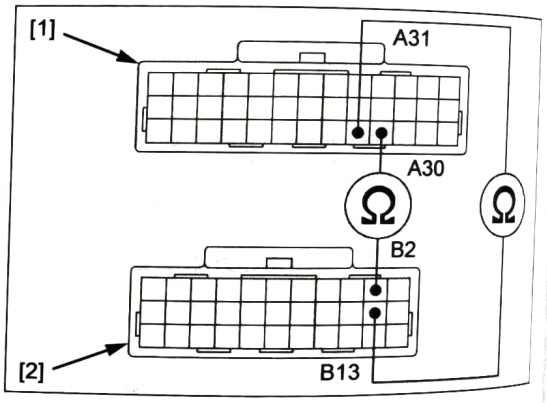

Is there continuity?

YES – GO TO STEP 2.

NO – • Open circuit in the Black/red wire
• Open circuit in the Black wire

2. **CAN Line (ECM-to-Combination meter) Open Circuit Inspection**

Disconnect the combination meter 24P connector (page 22-8).
Check the continuity between the wire harness side ECM 39P (Black) connector [1] and combination meter 24P (Gray) connector [2].

CONNECTION:
A31 – Black/red
A30 – Black

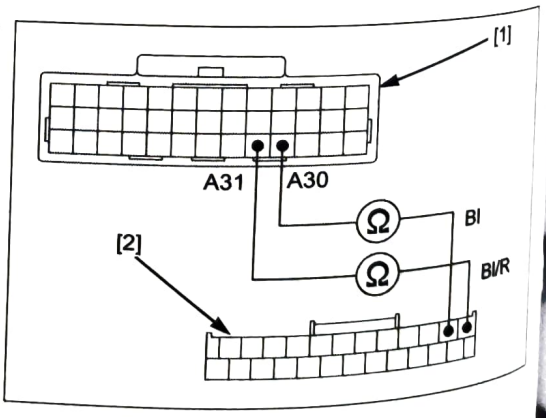

Is there continuity?

YES – GO TO STEP 3.

NO – • Open circuit in the Black/red wire
• Open circuit in the Black wire

3. **CAN Line Short Circuit Inspection**

Check for continuity between the wire harness side ECM 39P (Black) connector [1] and ground.

CONNECTION:

A31 – Ground

A30 – Ground

Is there continuity?

YES – • Short circuit in the Black/red wire
• Short circuit in the Black wire

NO – GO TO STEP 4.

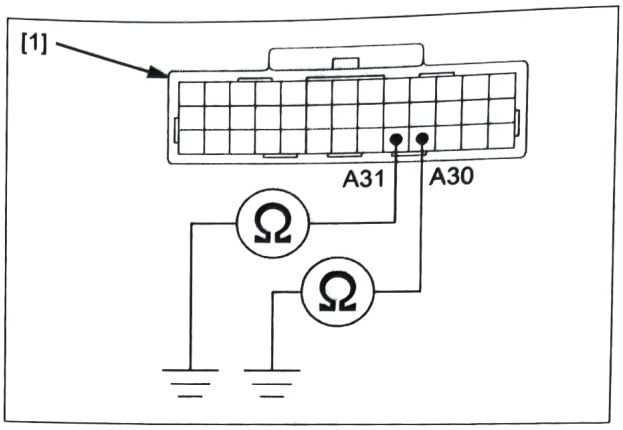

4. **Communicated Part Inspection**

Connect the disconnected connector(s).
Erase the DTC.
Replace the TCM (If equipped) and combination meter one by one in order with a new one.
Turn the ignition switch ON and wait for 10 seconds.
Check the DTC with MCS.

Is same DTC indicated?

YES – Replace the ECM with a new one, and recheck.

NO – Faulty original part

DTC U0155

Probable cause:

- Faulty CAN line(s)
- Faulty CAN connected unit(s)

Symptom/Fail-safe function:

- CAN communication failure

1. CAN Line Open Circuit Inspection

Disconnect the following:

– ECM 39P 8Black) connector (page 4-58)
– Combination meter 24P (Gray) connector (page 22-8)

Check the continuity between the wire harness side ECM 39P connector [1] and meter connector [2].

CONNECTION:
A31 – Black/red
A30 – Black

Is there continuity?

YES – GO TO STEP 2.

NO – • Open circuit in the Black/red wire
• Open circuit in the Black wire

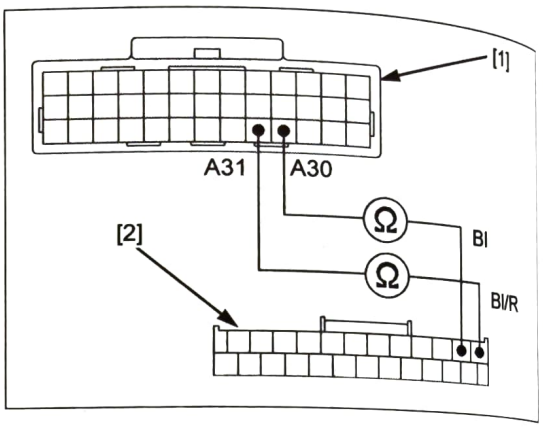

2. Combination meter Inspection

Replace the combination meter with a new one.
Connect the disconnected connector(s).
Erase the DTC.
Turn the ignition switch ON and wait for 10 seconds.
Check the DTC with MCS.

Is same DTC indicated?

YES – Replace the ECM with a new one, and recheck.

NO – Faulty original meter

DTC U019E

Probable cause:

- Faulty CAN line(s)
- Faulty CAN connected unit(s)

Symptom/Fail-safe function:

- CAN communication failure

1. Power Train CAN Line Open Circuit Inspection

Disconnect the following:

– ECM 33P (Gray) connector (page 4-58)
– TCM 33P (Black) connector (page 13-63)

Check for continuity between the wire harness side ECM 33P (Gray) connector [1] and TCM 33P (Black) connector [2].

CONNECTION:
C25 – A33
C24 – A21

Is there continuity?

YES – GO TO STEP 2.

NO – • Open circuit in the Black/red wire
• Open circuit in the Black wire

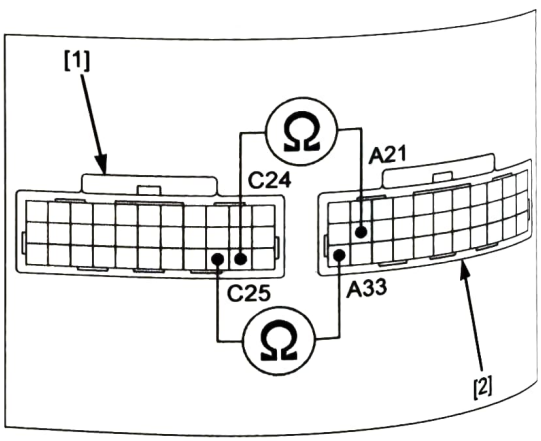

2. **Power Train CAN Line Short Circuit Inspection**

Check for continuity between the wire harness side ECM 33P (Gray) connector [1] and ground.

CONNECTION:

C25 – Ground

C24 – Ground

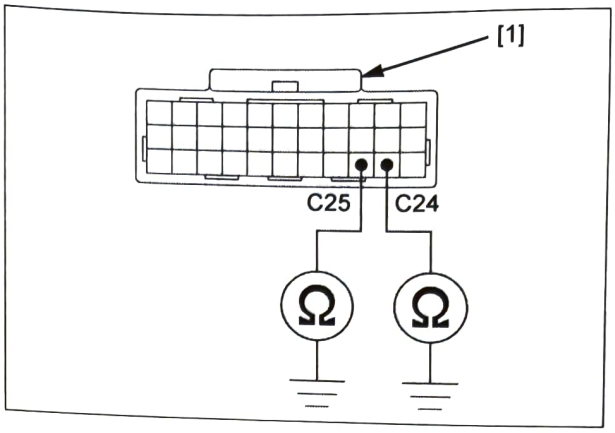

Is there continuity?

YES – • Short circuit in the Black/red wire
• Short circuit in the Black wire

NO – GO TO STEP 3.

3. **TCM Inspection**

Replace the TCM with a new one.
Connect the disconnected connector(s).
Erase the DTC.
Turn the ignition switch ON and wait for 10 seconds.
Check the DTC with MCS.

Is same DTC indicated?

YES – Replace the ECM with a new one, and recheck.

NO – Faulty original TCM

MIL CIRCUIT TROUBLESHOOTING

When The Ignition Switch ON, The MIL Does Not Come On

Check that the MIL comes on a few seconds and goes off when the ignition switch is turned ON.

If the MIL and digital display do not function at all, refer to meter power/ground line inspection (page 22-8).

When The Ignition Switch ON, The MIL Does Not Go Off Within A Few Seconds (Engine Starts)

NOTE:

- If the engine stop switch is in "⊠", the MIL will stay on even when the system is normal.

If the MIL stays on, check the meter indication when the CAN line is abnormal (page 4-50).

If the indication is not according to above condition, check as follows.

Turn the ignition switch OFF.
Disconnect the ECM 39P (Black) connector (page 4-58).
Check for continuity between the wire harness side ECM 39P (Black) connector [1] and ground.

TOOL:
Test probe, 2 packs **07ZAJ-RDJA110**

CONNECTION: A19 – Ground

If there is continuity, check for short circuit in the Yellow wire between the DLC and ECM.
If there is no continuity, replace the ECM with a known good one and recheck (page 4-58).

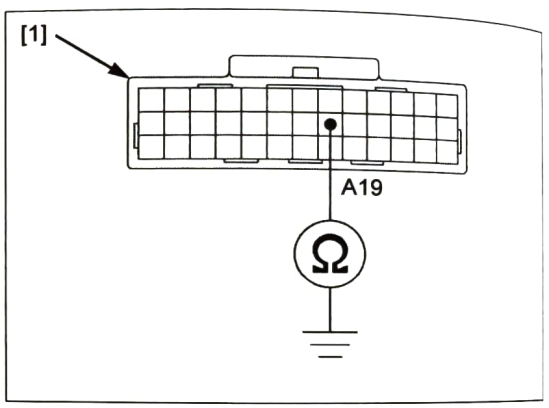

A/F SENSOR

REMOVAL/INSTALLATION

NOTICE

- *Handle the A/F sensor with care.*
- *Do not get grease, oil, or other materials in the A/F sensor air hole.*
- *Be careful not to damage the sensor wire.*
- *Do not use an impact wrench while removing or installing the A/F sensor.*

Remove the two bolts [1] from the stay [2].

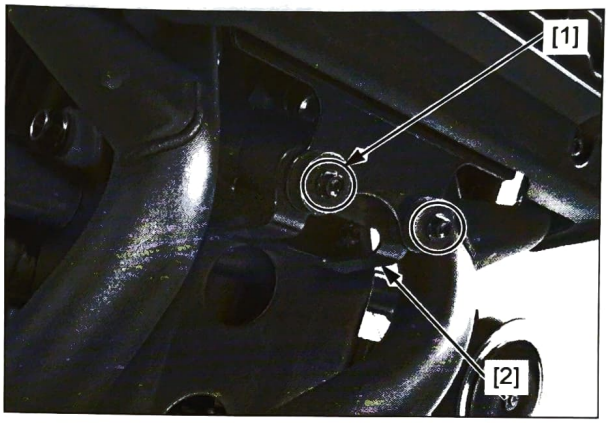

Be careful not to damage the radiator fins.

Remove the socket bolt [1].

Release the band clip [2].

Remove the bolt [3].

Slide the radiator forward.

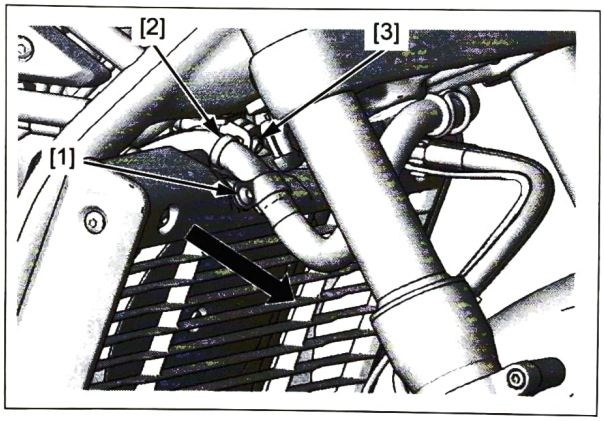

LEFT SIDE

Release the left A/F sensor wire [1] from the guides [2].

Disconnect the left A/F sensor 4P (Black) connector [3].

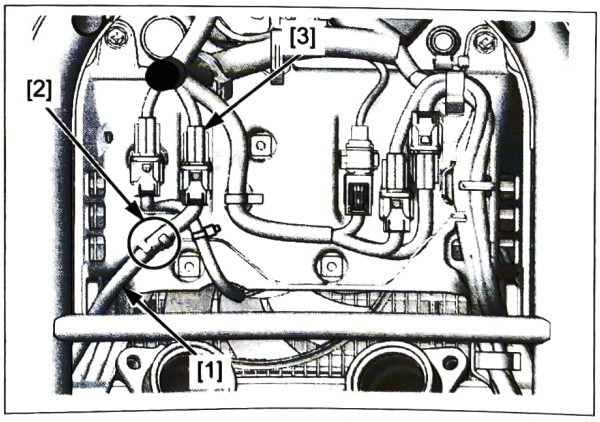

Remove the left A/F sensor [1] using the special tool.

TOOL:
Sensor socket wrench [2] **FRXM17 (Snap-on) or equivalent**

Installation is in the reverse order of removal.

TORQUE: 24.5 N·m (2.5 kgf·m, 18 lbf·ft)

NOTE:
- Route the hose and wire properly (page 1-27).

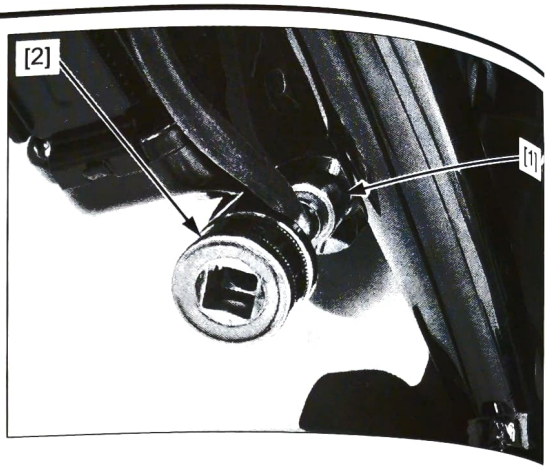

RIGHT SIDE

Release the right A/F sensor wire [1] from the clamps [2] and the guides [3].

Disconnect the right A/F sensor 4P connector [3].

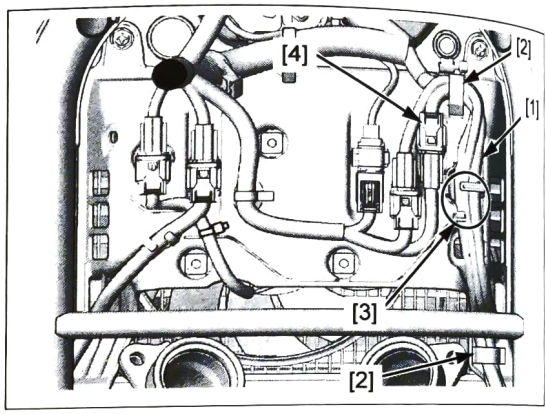

Remove the exhaust pipe (page 2-17).

Remove the right A/F sensor [1] using the special tool.

TOOL:
Sensor socket wrench [2] **FRXM17 (Snap on) or equivalent**

Installation is in the reverse order of removal.

TORQUE: 24.5 N·m (2.5 kgf·m, 18 lbf·ft)

NOTE:
- Route the hose and wire properly (page 1-27).

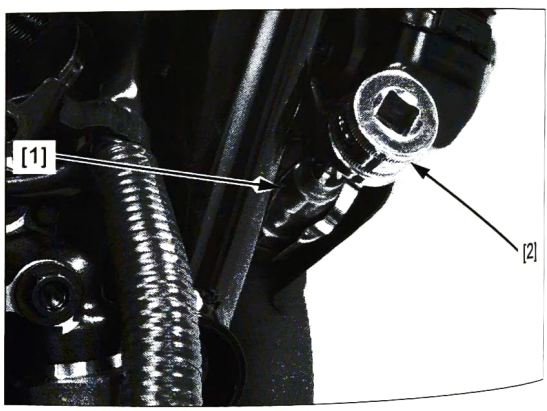

MAP SENSOR

REMOVAL/INSTALLATION

Remove the fuel tank (page 7-6).

Disconnect the MAP sensor 3P (Black) connector [1].

Remove the screw [2] and MAP sensor [3] from the throttle body setting plate.

Disconnect the MAP sensor hose [4].

Installation is in the reverse order of removal.

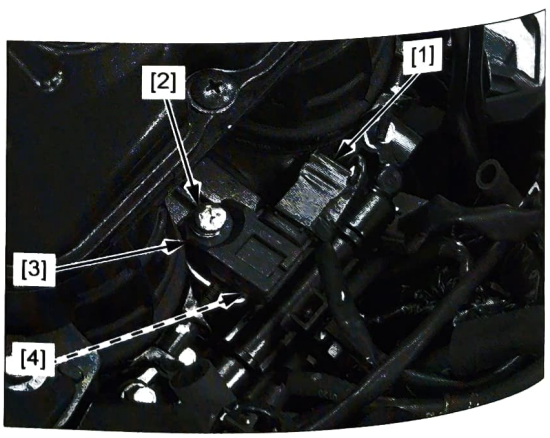

IAT SENSOR

REMOVAL/INSTALLATION

Remove the fuel tank (page 7-6).

Disconnect the IAT sensor 2P (Blue) connector [1].

Remove the following:

- screws [2]
- IAT sensor [3]
- O-ring [4]

Installation is in the reverse order of removal.

TORQUE: 1.1 N·m (0.1 kgf·m, 0.8 lbf·ft)

NOTE:

- Check the O-ring and replace if necessary as an IAT sensor assembly.

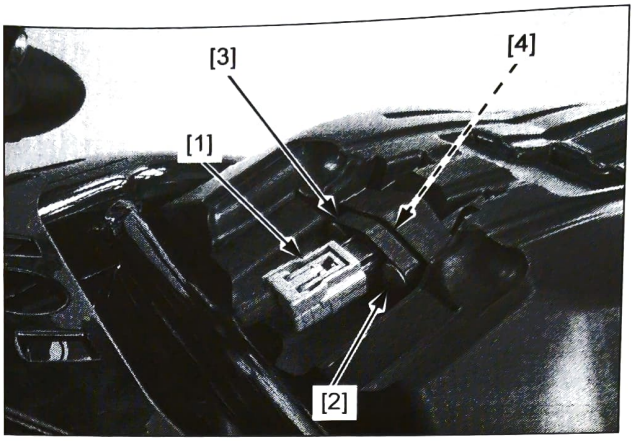

ECT SENSOR

REMOVAL/INSTALLATION

Remove the thermostat (page 8-6).

Disconnect the ECT sensor 2P (Black) connector [1].

Remove the ECT sensor [2] and O-ring [3].

Installation is in the reverse order of removal.

TORQUE: 12 N·m (1.2 kgf·m, 9 lbf·ft)

NOTE:

- Do not apply oil to the O-ring.
- Check the O-ring and replace if necessary as an ECT sensor assembly.

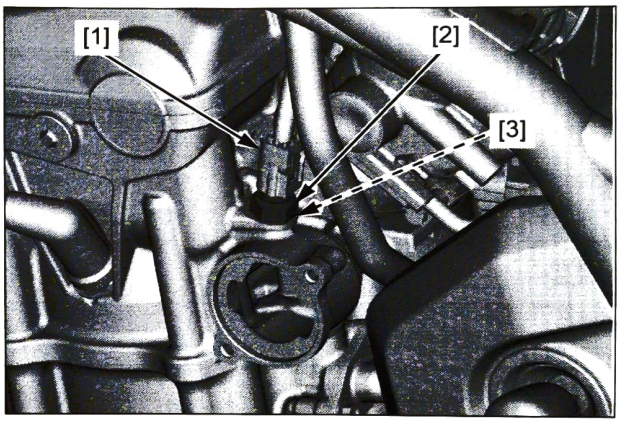

INSPECTION

Remove the ECT sensor (page 4-57).

Suspend the ECT sensor [1] in a pan of coolant on an electric heating element and measure the resistance through the sensor as the coolant heats up.

- Soak the ECT sensor in coolant up to its threads with at least 40 mm (1.6 in) from the bottom of the pan to the bottom of the sensor.
- Keep the temperature constant for 3 minutes before testing. A sudden change of temperature will result in incorrect readings. Do not let the thermometer or ECT sensor touch the pan.

Measure the resistance between the ECT sensor terminals.

Temperature	40°C (104°F)	100°C (212°F)
Resistance	1.0 – 1.3 kΩ	0.14 – 0.18 kΩ

Replace the ECT sensor if it is out of specification.

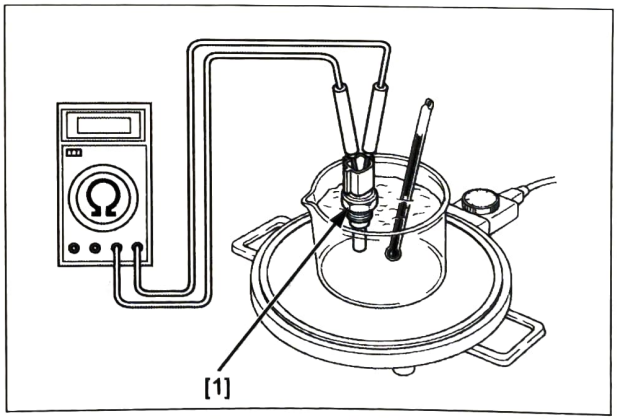

ECM

REMOVAL/ INSTALLATION

Remove the following:

- side cover (page 2-4)
- battery (page 21-5)

Release the following from the battery case:

- starter relay switch (page 6-9)
- SUB VB/FI relay connector (page 4-63)
- START/DCT relay connector (page 6-12)
- HIGH BEAM relay connector (page 22-29)
- harness clip [1]

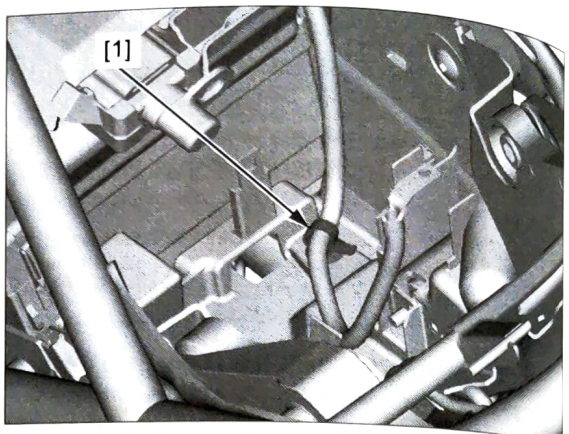

Remove the three clips [1].

Open the lid of the battery case.

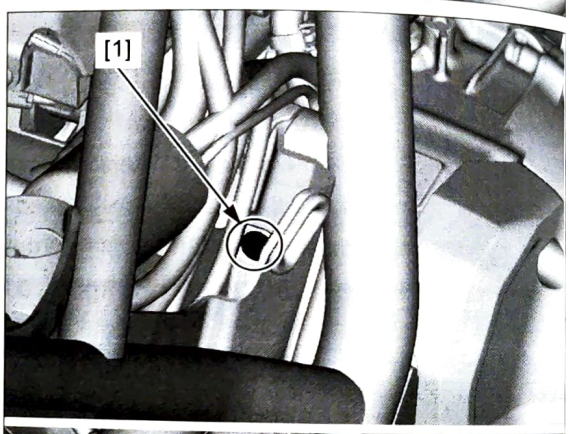

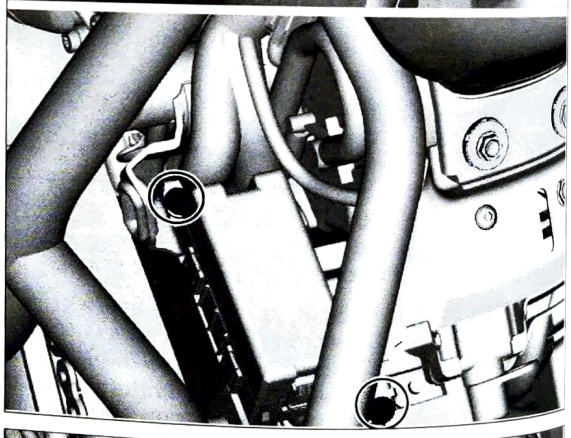

Disconnect the following:

- ECM 39P (Black) connector [1]
- ECM 33P (Black) connector [2]
- ECM 33P (Gray) connector [3]

Remove the ECM [4].

Installation is in the reverse order of removal.

NOTE:

- Route the hose and wires properly (page 1-27).

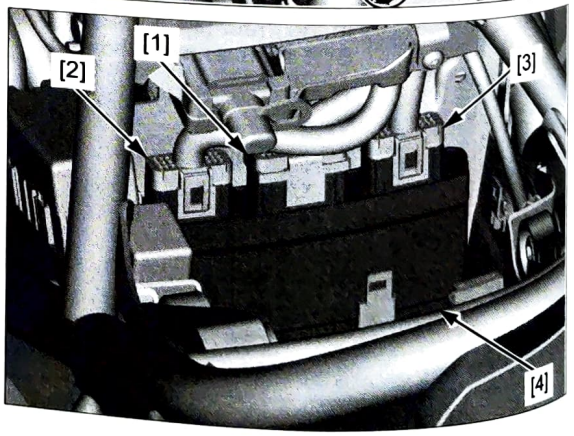

POWER/GROUND LINE INSPECTION

POWER INPUT LINE

Disconnect the ECM 39P (Black) connector (page 4-58).

Measure the voltage between the wire harness side ECM 39P (Black) connector [1] and ground.

TOOL:
Test probe, 2 packs **07ZAJ-RDJA110**

CONNECTION: A11 (+) – Ground (–)

There should be battery voltage with the ignition switch turned ON.

If there is no voltage, check the following:

- Open circuit in the Brown wires between the FI relay and ECM
- FI relay and related circuit

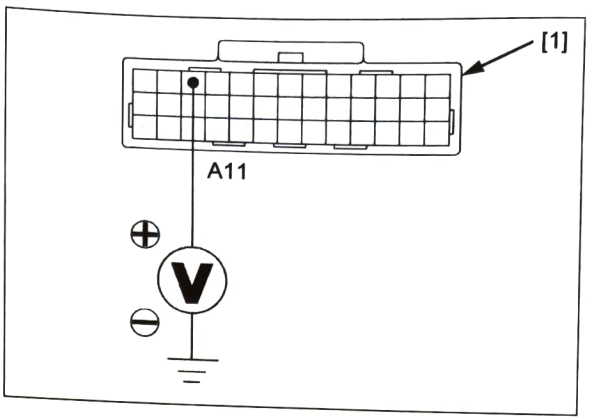

GROUND LINE

Disconnect the ECM 39P (Black) connectors and 33P (Black) connector (page 4-58).

Check for continuity between the ECM 39P (Black) connectors terminals and ground.

- ECM 39P (Black) A connector [1]
- ECM 33P (Black) B connector [2]

TOOL:
Test probe, 2 packs **07ZAJ-RDJA110**

CONNECTION: Green/White (A9) – Ground
Black (A10) – Ground
Green/White (A22) – Ground
Black (A23) – Ground
Black (A24) – Ground
Green/blue (B12) – Ground

There should be continuity at all times.

If there is no continuity, check for open circuit in the Green or Green/blue wires.

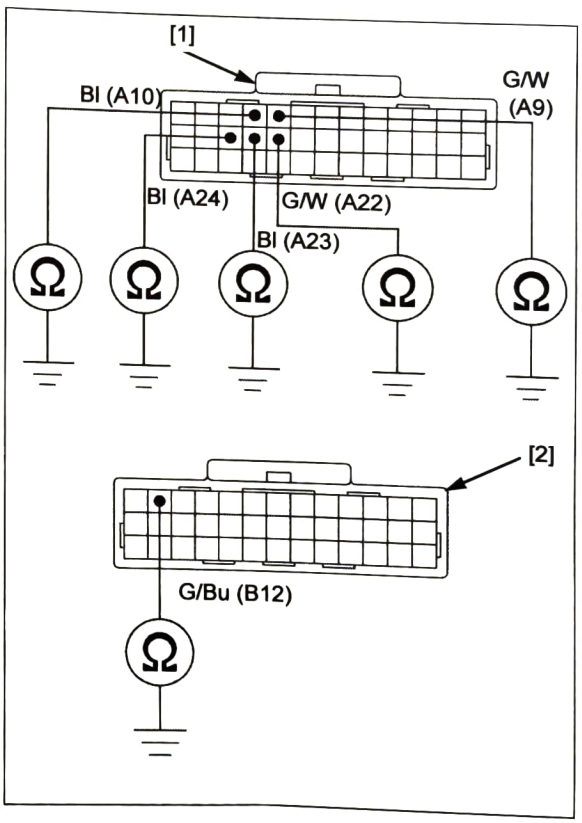

VS SENSOR

REMOVAL/INSTALLATION

Remove the battery case (page 2-12).

Disconnect the VS sensor 3P (Black) connector [1].

Remove the bolt [2], VS sensor [3], and O-ring [4].

Installation is in the reverse order of removal.

NOTE:

- Replace the O-ring with a new one.
- Apply engine oil to a new O-ring.

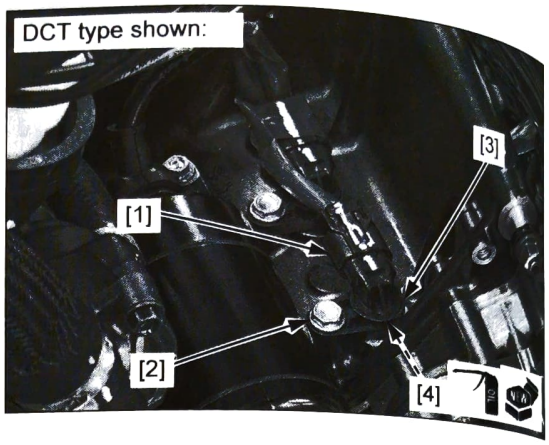

BANK ANGLE SENSOR

REMOVAL/INSTALLATION

Remove the pair control solenoid valve (page 7-15).

Remove the following from the stay [1]:

- two nuts [2]
- bank angle sensor [3]
- two socket bolts [4]
- two grommets [5]
- two collars [6]

Installation is in the reverse order of removal.

NOTE:

- Install the bank angle sensor with the "UP" mark facing up.

TORQUE:

Bank angle sensor nut:
10 N·m (1.0 kgf·m, 7 lbf·ft)

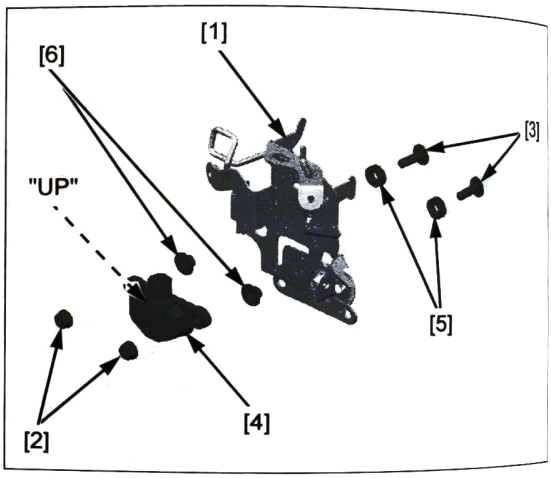

INSPECTION

Remove the bank angle sensor without disconnecting its connector (page 4-60).

SYSTEM INSPECTION WITH MCS

Temporarily install the ECM to the wire harness by connecting the 39P (Black) connector.

Connect the MCS to the DLC (page 4-8).

Check the output voltage at each position of the sensor with the MCS.

STANDARD:
Horizontal Position: 7.0 – 8.8 V
Approx. 70°: 0.40 – 0.84 V

FUNCTION CHECK

Temporarily install the following components to the wire harness by connecting each connector (page 5-7).

- ECM
- ignition coils

Place the bank angle sensor [1] horizontal.

Start the engine.

Turn the bank angle sensor approximately 70° to the left or right.

The bank angle sensor is normal if the engine stops after a few seconds.

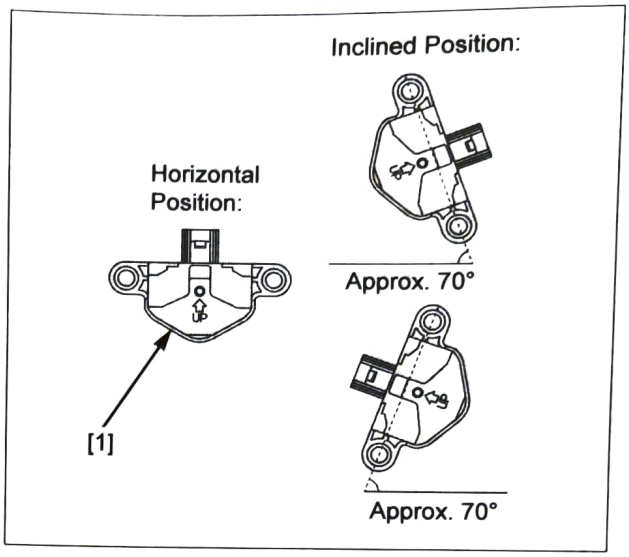

GP SENSOR (MT type)

REMOVAL/INSTALLATION

Remove the battery case (page 2-12).

Disconnect the GP sensor 3P (Black) connector [1].

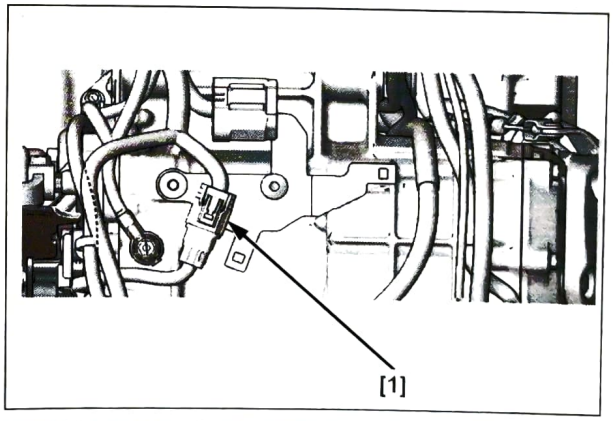

Remove the following:

- GP sensor mounting bolt [1]
- Sensor cover [2]
- GP sensor [3]
- O-ring [4]

Installation is in the reverse order of removal.

TORQUE:
GP sensor mounting bolt:
12 N·m (1.2 kgf·m, 9 lbf·ft)

NOTE:

- Always replace the O-ring with a new one.
- Apply engine oil to a new O-ring.
- Align the flat surfaces of the GP sensor and shift drum end.
- Route the wire properly (page 1-27).

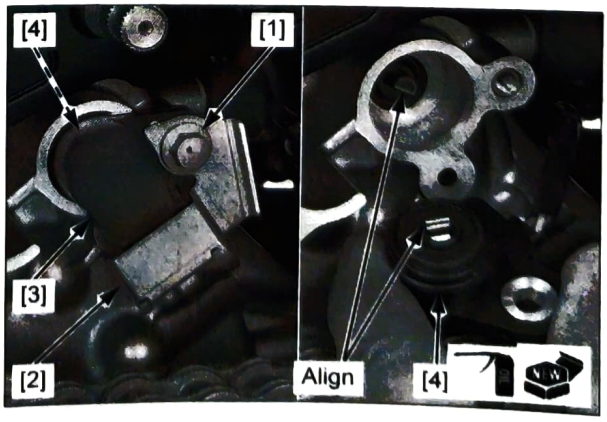

GRIP APS INSPECTION

NOTE:

- Before starting the inspection, check for loose or poor contact on the grip APS 8P connector and ECM 39P (Black) connector, then recheck the DTC.

1. APS 1 and 2 Input Voltage Inspection

Turn the ignition switch OFF.
Disconnect the grip APS 8P connector [1] (page 22-20).
Turn the ignition switch ON.
Measure the voltage at the harness side.

CONNECTION: Black
(+) [VCC 1] – Ground
White (+) [VCC 2] – Ground

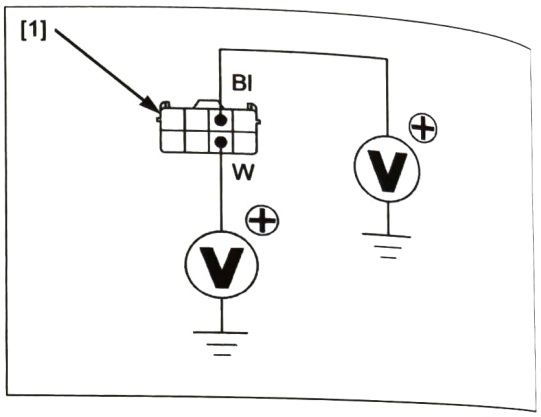

Is the voltage about 5 V?

YES – GO TO STEP 2.

NO – Open or short circuit in the White or Black wire. If the wires are OK, replace the ECM with a known good one and recheck (page 4-58).

2. APS 1 and 2 System Inspection

Erase the DTC (page 4-8).
Check the APS 1 and 2 with the MCS.
Note the APS 1 and 2 output voltage.

Calculate the 5 V / input voltage x output voltage.
Standard (at throttle opened):
APS 1: 4.878 – 4.902 V
APS 2: 4.878 – 4.902 V
Standard (at throttle closed):
APS 1: 0.137 – 0.161 V
APS 2: 0.083 – 0.107 V

Is the voltage within standard?

YES – Intermittent failure

NO – GO TO STEP 3.

3. **APS System Inspection**

Connect a 5 V battery to the grip APS 8P connector terminals at the APS side as shown.

CONNECTION:
APS 1: Yellow/red (+) – Yellow/black (–)
APS 2: White/red (+) – White/black (–)

Measure the voltage at the APS side.

CONNECTION:
APS 1: Blue/white (+) – Yellow/black (–)
APS 2: Gray (+) – White/black (–)

Calculate the 5 V / input voltage x output voltage.
STANDARD (at throttle opened):
APS 1: 4.588 – 4.612 V
APS 2: 2.288 – 2.312 V
STANDARD (at throttle closed):
APS 1: 0.878 – 0.902 V
APS 2: 0.238 – 0.262 V

Is the voltage within standard?

YES – Replace the ECM with a known good one and recheck (page 4-58).

NO – Replace the right handlebar switch with a known good one and recheck (page 22-20).

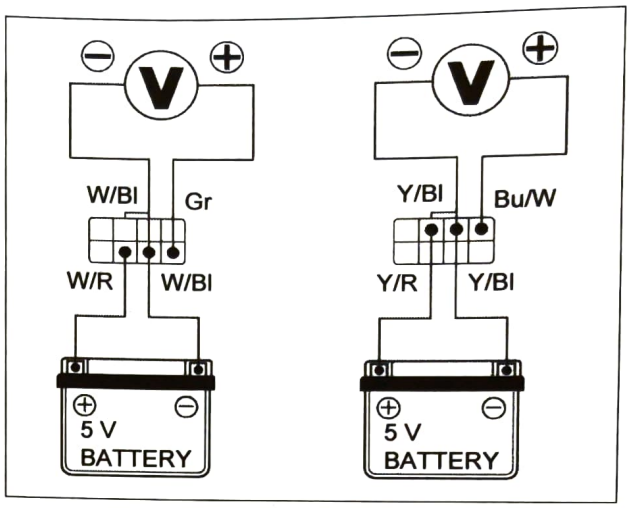

REMOVAL/INSTALLATION

Refer to the right handlebar switch servicing (page 22-20).

FI RELAY

REMOVAL/INSTALLATION

Remove the following:

- tool box (page 2-12)
- cover [1]
- FI relay [2]

Installation is in the reverse order of removal.

- For relay inspection (page 4-64)

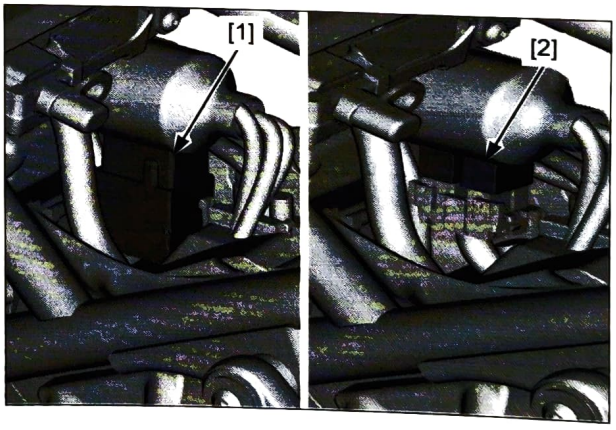

RELAY INSPECTION

Remove the FI relay (page 4-63).

Connect an ohmmeter to the FI relay [1] terminals as shown.
Connect a 12 V battery to the FI relay terminals as shown.

There should be continuity only when 12 V battery is connected.
If there is no continuity when the 12 V battery is connected, replace the FI relay.

Install the FI relay (page 4-63).

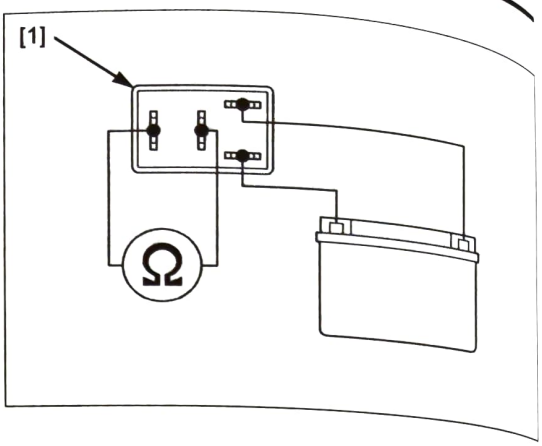

TBW RELAY

REMOVAL/INSTALLATION

Remove the left side cover (page 2-4).

Remove the power box cover and TBW relay [1].

Installation is in the reverse order of removal.

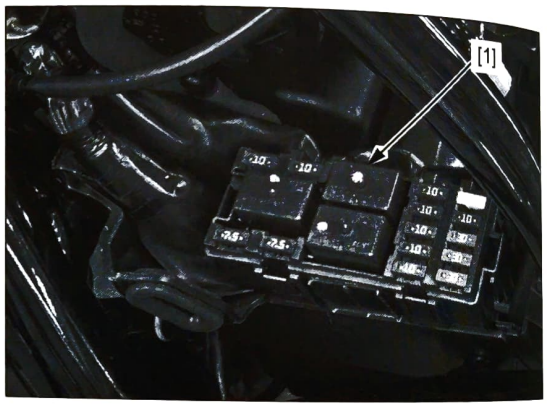

RELAY INSPECTION

Remove the TBW relay (page 4-64).

Connect an ohmmeter to the TBW relay [1] terminals as shown.
Connect a 12 V battery to the TBW relay terminals as shown.

There should be continuity only when 12 V battery is connected.
If there is no continuity when the 12 V battery is connected, replace the TBW relay.

Install the TBW relay (page 4-64).

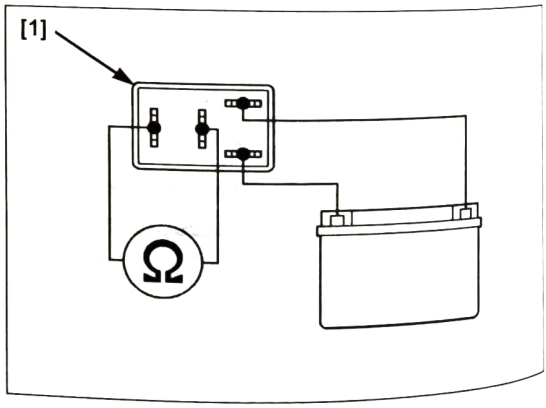

SUB VB RELAY

REMOVAL/INSTALLATION

Remove the following:

- tool box (page 2-12)
- cover [1]
- SUB VB relay [2]

Installation is in the reverse order of removal.

- For relay inspection (page 4-64)

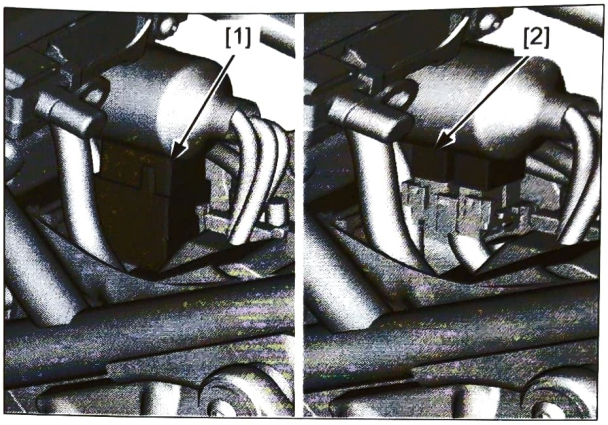

CKP SENSOR

REMOVAL/INSTALLATION

Remove the left engine cover (page 2-11).

Remove the alternator cover bolt [1] and stay [2].

Disconnect the CKP sensor 3P (Black) connector [3].

Remove the CKP sensor bolt [4], CKP sensor [5], and O-ring [6].

Installation is in the reverse order of removal.

TORQUE:

CKP sensor bolt:
12 N·m (1.2 kgf·m, 9 lbf·ft)

Alternator cover bolt:
12 N·m (1.2 kgf·m, 9 lbf·ft)

NOTE:

- Replace the O-ring with a new one.
- Apply engine oil to a new O-ring.

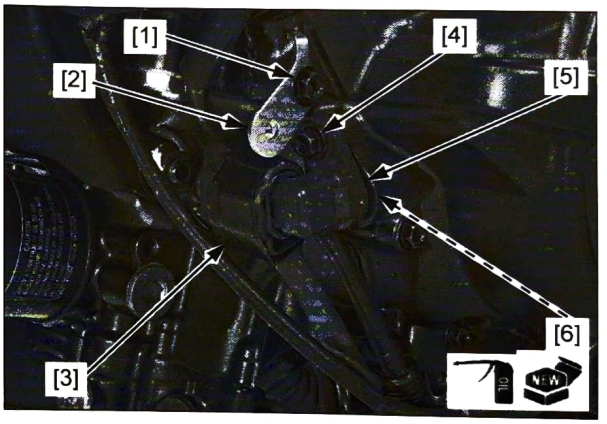

MEMO

5. IGNITION SYSTEM

5

SERVICE INFORMATION 5-2

TROUBLESHOOTING 5-3

SYSTEM LOCATION 5-4

SYSTEM DIAGRAM 5-5

IGNITION SYSTEM INSPECTION 5-7

IGNITION TIMING 5-9

IGNITION COIL 5-10

SERVICE INFORMATION

GENERAL

NOTICE

- *The ECM may be damaged if dropped. Also if the connector is disconnected when current is flowing, the excessive voltage may damage the module. Always turn off the ignition switch before servicing.*
- *Use spark plug of the correct heat range. Using a spark plug with an incorrect heat range can damage the engine.*
- When servicing the ignition system, always follow the steps in the troubleshooting table (page 5-3).
- Some electrical components may be damaged if terminals or connectors are connected or disconnected while the ignition switch is turned to the ON position and current is present.
- A faulty ignition system is often related to poorly connected or corroded connections. Check those connections before proceeding.
- Make sure that the battery is adequately charged. Using the starter motor with a weak battery results in a slower engine cranking speed as well as no spark at the spark plug.
- Refer to following components informations:
  - ECM (page 4-58)
  - TCM (DCT type) (page 13-63)
  - FI relay (page 4-63)
  - Neutral switch (DCT type) (page 13-63)
  - Neutral switch (MT type) (page 22-24)
  - Engine stop switch (right handlebar switch) (page 22-20)
  - CKP sensor (page 4-65)
  - Sidestand switch (page 22-24)
- The following color codes are used throughout this section.

Be = Beige	Bl = Black	Br = Brown	Bu = Blue	G = Green	Gr = Gray
Lb = Light blue	Lg = Light green	O = Orange	P = Pink	R = Red	V = Violet
W = White	Y = Yellow				

TOOLS

IgnitionMate peak voltage tester MTP07-0286 (U.S.A. only)	Peak voltage adaptor 07HGJ-0020100	Test probe, 2 pack 07ZAJ-RDJA110
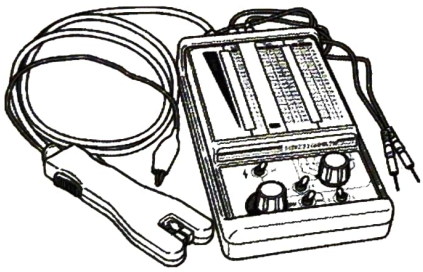	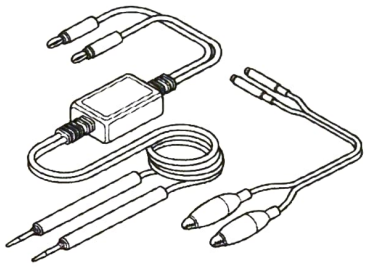	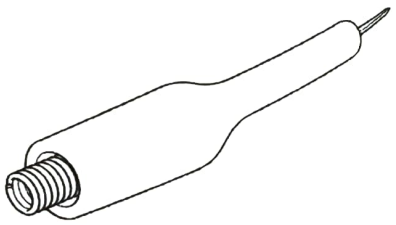
	(not available in U.S.A.) with commercially available digital multimeter (impedance 10 MΩ/DCV minimum)	

- Inspect the following before diagnosing the system.
  - Faulty spark plug
  - Loose spark plug cap or spark plug wire connection
  - Water got into the spark plug cap (Leaking the ignition coil secondary current)
- If there is no spark at cylinder, temporarily exchange the ignition coil with a known good one and perform the spark test. If there is spark, the original ignition coil is faulty.
- "Initial voltage" of the ignition primary coil is the battery voltage with the ignition switch turned ON and engine stop switch turned "○" (The engine is not cranked by the starter motor).

No spark at spark plug

	Unusual condition	Probable cause (Check in numerical order)
Ignition coil primary voltage	No initial voltage with the ignition switch ON (Other electrical components are normal).	1. Faulty ignition switch 2. Faulty FI relay or its related circuits 3. An open circuit between the FI relay and ignition coil wires 4. Loose or poor connection of the primary terminal, or an open circuit in the primary coil 5. Faulty ECM (in case when the initial voltage is normal with the ECM connector disconnected)
	Initial voltage is normal, but it drops by 2 – 4 V while cranking the engine.	1. Incorrect peak voltage adaptor connections (System is normal if measured voltage is over the specifications with reverse connections) 2. Battery is undercharged (Voltage drops largely when the engine is started). 3. An open circuit or loose connection in ECM power/ground lines 4. An open circuit or loose connection between the ignition coil and ECM wires 5. Faulty CKP sensor or related circuit 6. Faulty ECM (in case when above No. 1 through 5 are normal)
	Initial voltage is normal, but there is no peak voltage while cranking the engine.	1. Incorrect peak voltage adaptor connections 2. Faulty peak voltage adaptor 3. Faulty CKP sensor 4. Faulty ECM (in case when above No. 1 through 3 are normal)
	Initial voltage is normal, but peak voltage is lower than the standard value.	1. The multimeter impedance is too low; below 10 MΩ/DCV. 2. Cranking speed is too slow (Battery is undercharged). 3. The sampling timing of the tester and measured pulse were not synchronized (System is normal if measured voltage is over the standard voltage at least once) 4. Faulty ECM (in case when above No. 1 through 3 are normal)
	Initial and peak voltages are normal, but no spark jumps at plug.	1. Faulty spark plug or leaking ignition coil secondary current ampere 2. Faulty ignition coil

SYSTEM LOCATION

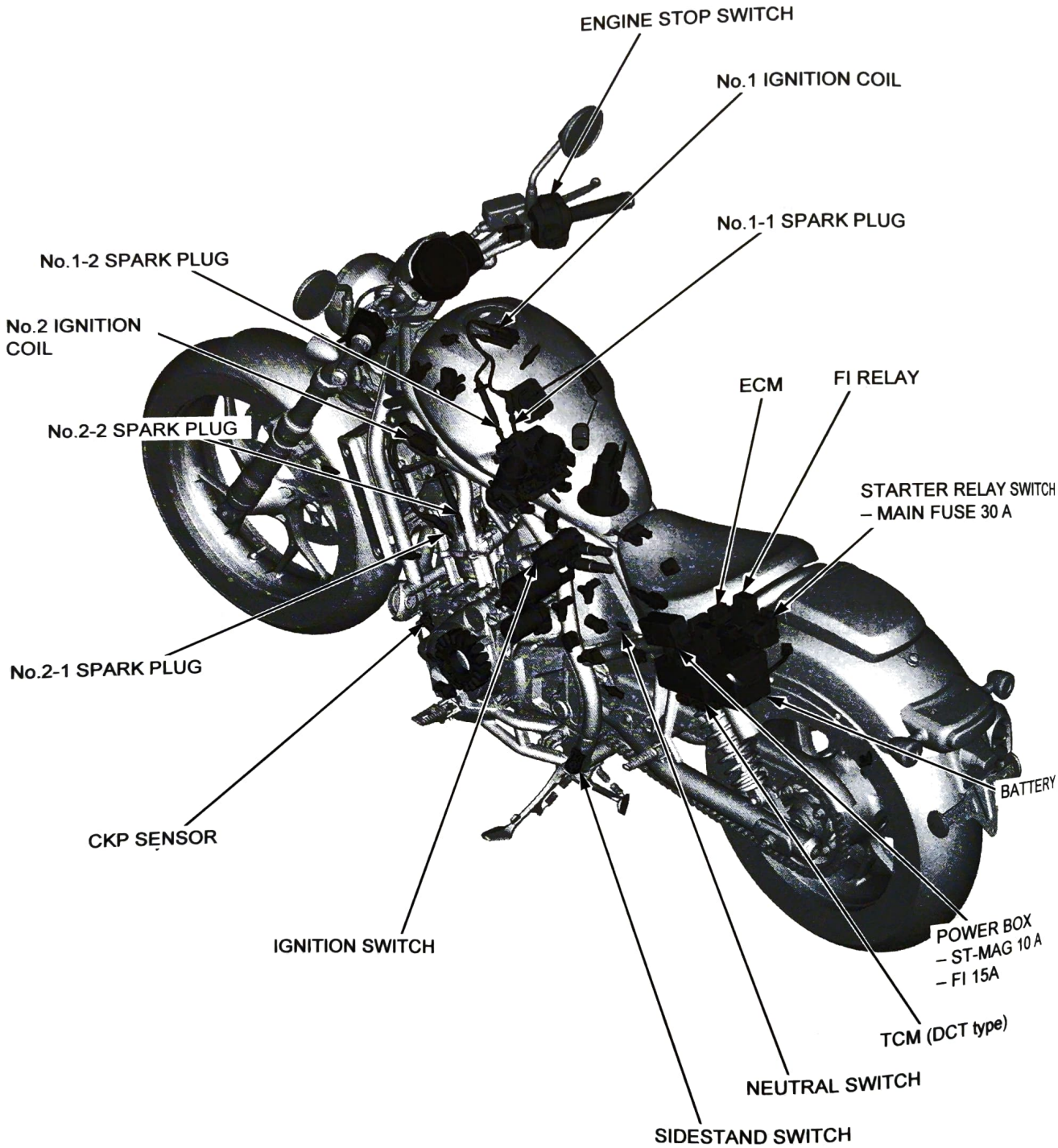

SYSTEM DIAGRAM

MT type:

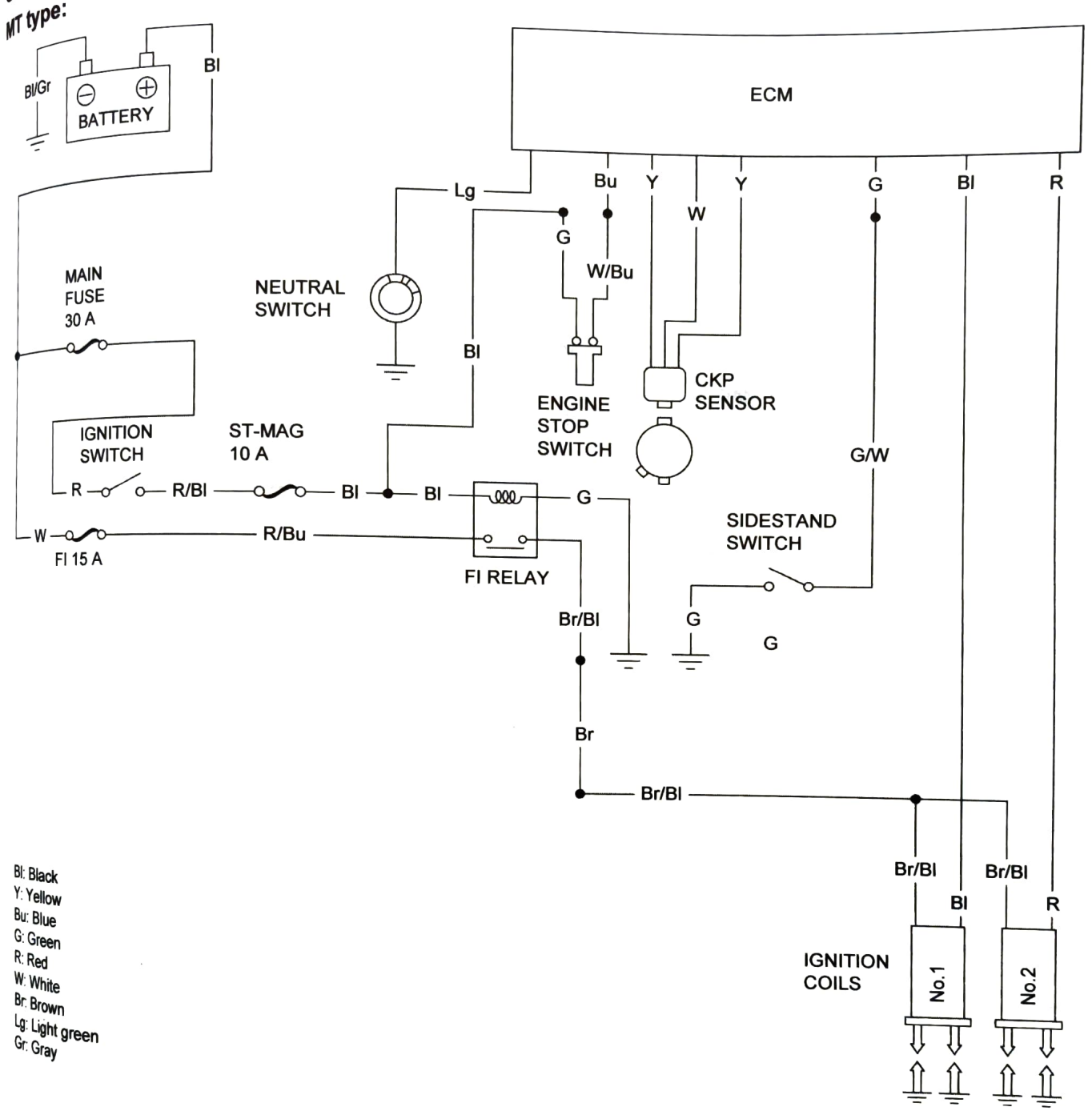

Bl: Black
Y: Yellow
Bu: Blue
G: Green
R: Red
W: White
Br: Brown
Lg: Light green
Gr: Gray

DCT type:

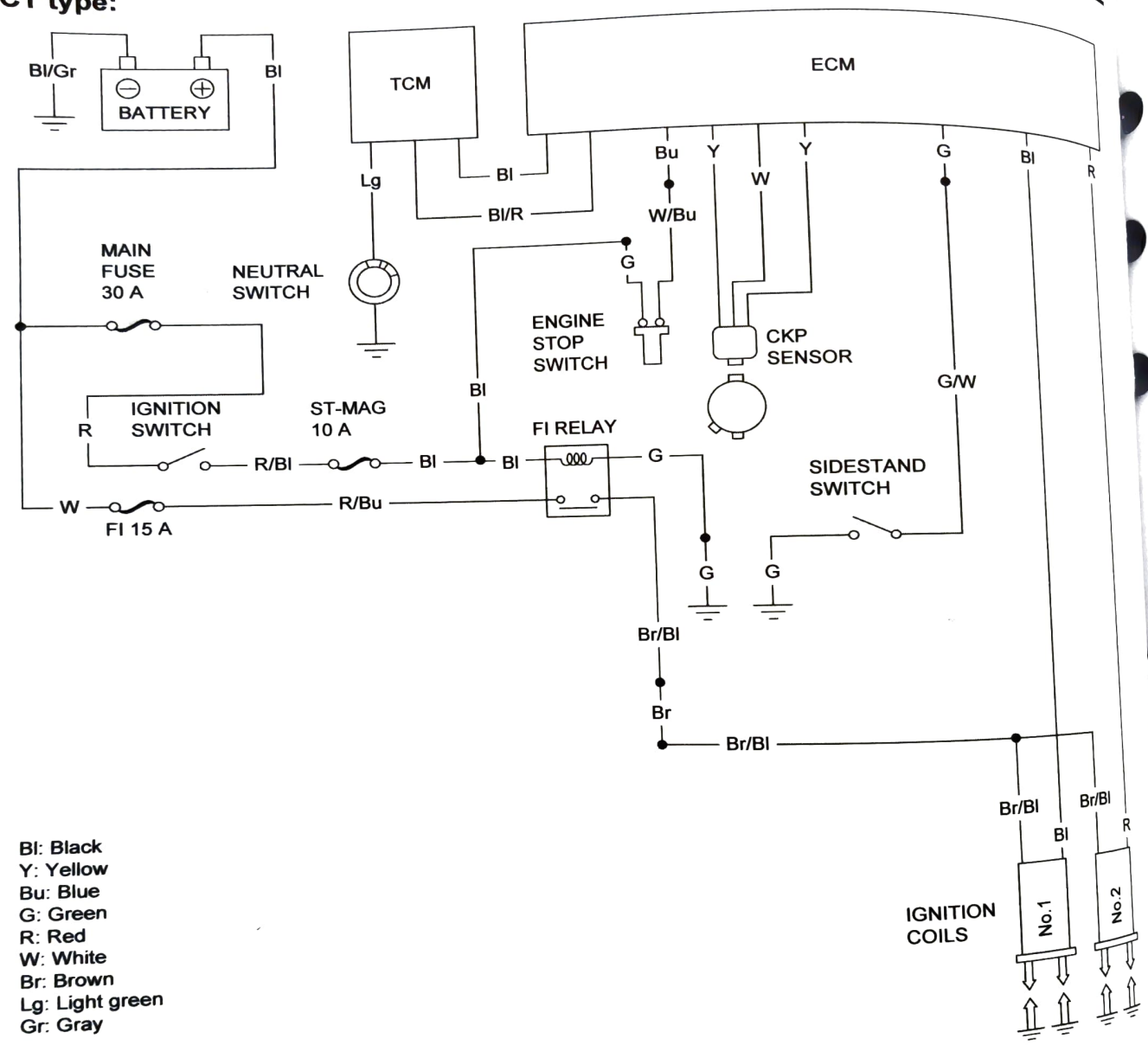

Bl: Black
Y: Yellow
Bu: Blue
G: Green
R: Red
W: White
Br: Brown
Lg: Light green
Gr: Gray

IGNITION SYSTEM INSPECTION

NOTE:

- If there is no spark at the plug, check all connections for loose or poor contact before measuring the peak voltage.
- Use a commercially available digital multimeter with an impedance of 10 MΩ/DCV minimum.
- The display value differs depending upon the internal impedance of the multimeter.
- If the peak voltage tester (U.S.A. only) is used, follow the manufacturer's instructions.

Connect the peak voltage adaptor [1] to the digital multimeter [2], or use the Imrie diagnostic tester.

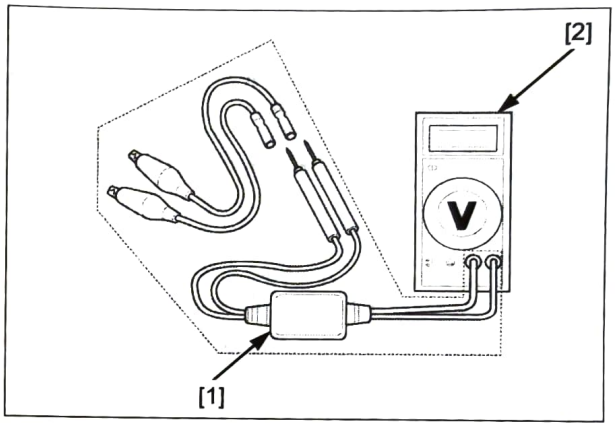

TOOL:

IgnitionMate peak voltage tester	**MTP07-0286 (U.S.A. only) or 07HGJ-0020100 (not available in U.S.A.)**
Peak voltage adaptor with commercially available digital multimeter (impedance 10 MΩ/DCV minimum)	

IGNITION COIL PRIMARY PEAK VOLTAGE

NOTE:

- Check all system connections before performing this inspection. Loose connectors can cause incorrect readings.
- Check the cylinder compression and check that the spark plugs are installed correctly in the cylinder head.

Remove the air cleaner housing (page 7-10).

Temporarily install the following components to the wire harness by connecting each connector:

- ECM 33P/39P connectors
- ignition coils
- ignition switch 2P (Blown) connector
- EOP switch 2P (Black) connector
- bank angle sensor 2P (Black) connector
- VS sensor 3P (Black) connector
- A/F sensor 4P (Black) connectors

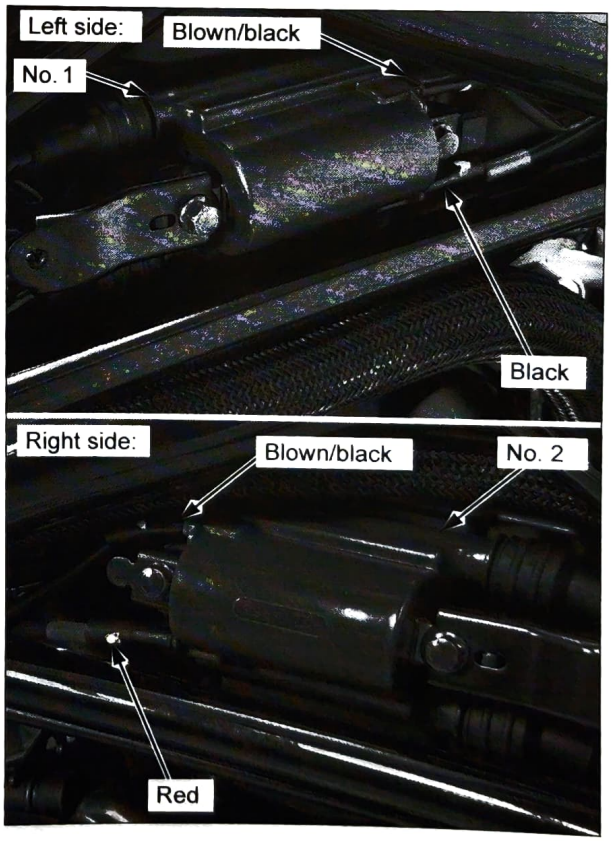

Connect a known good spark plug [1] to the spark plug cap and ground it to the cylinder head as done in a spark test.

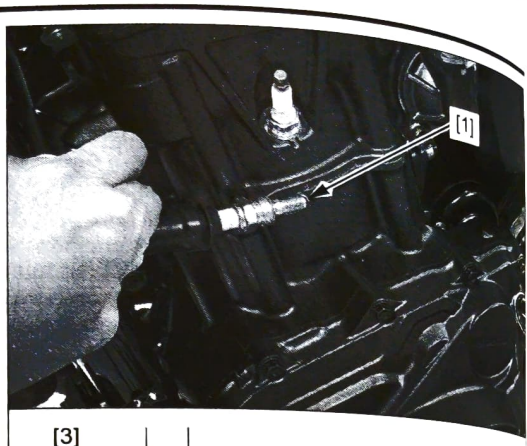

With the connectors connected, connect the peak voltage adaptor [2] or Imrie tester probes to the ignition coil primary terminal [3] and ground.

CONNECTION:
No. 1 (left) ignition coil:
Black (+) – Ground (–)
No. 2 (Right) ignition coil:
Red (+) – Ground (–)

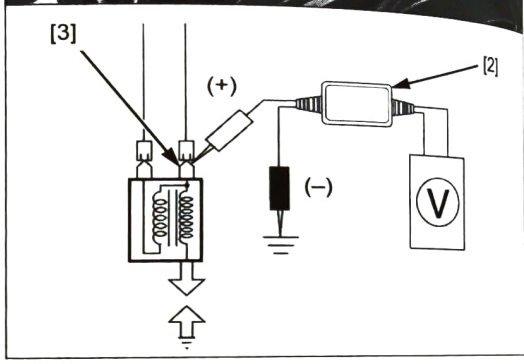

Turn the ignition switch ON with the engine stop switch "○".
Check the initial voltage at this time.
The battery voltage should be measured.
If the initial voltage cannot be measured, follow the checks described in the troubleshooting table (page 5-3).

Shift the transmission into neutral.

Avoid touching the spark plug and tester probes to prevent electric shock.

Crank the engine with the starter motor and read ignition coil primary peak voltage.

PEAK VOLTAGE: 100 V minimum

NOTE:
- Although measured values are different for each ignition coil, they are normal as long as voltage is higher than the specified value.

If the peak voltage is lower than the standard value, follow the checks described in the troubleshooting table (page 5-3).

Install the removed parts in the reverse order of removal.

CKP SENSOR CIRCUIT INSPECTION

Remove the left engine cover (page 2-11).

Disconnect the CKP sensor 3P (Black) connector [1].

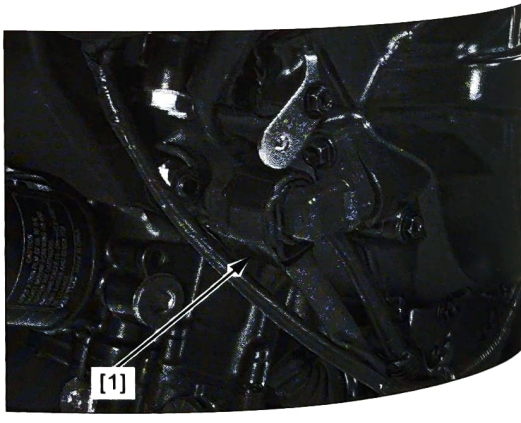

POWER INPUT/GROUND LINE INSPECTION

Turn the ignition switch ON.

Measure the voltage at the wire harness side CKP sensor 3P (Gray) connector [1] terminals.

CONNECTION: Yellow (+) – White (–)
STANDARD: 4.75 – 5.25 V

If standard voltage does not appear, the Yellow and/or White wires have an open circuit.

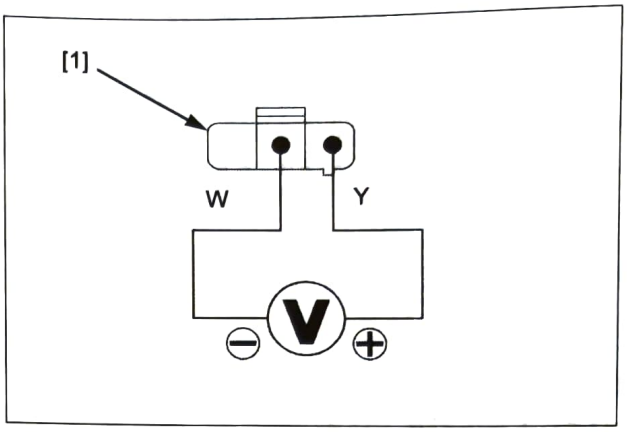

SIGNAL LINE INSPECTION

Turn the ignition switch OFF.

Disconnect the ECM 33P (Black) connector (page 4-58).

Check for continuity between the wire harness side CKP sensor 3P (Gray) connector [1] and ECM 33P (Black) connector [2] terminals.

TOOL:
Test probe **07ZAJ-RDJA110**

CONNECTION: Yellow – B16

If there is no continuity, check for an open circuit in the Yellow wire.

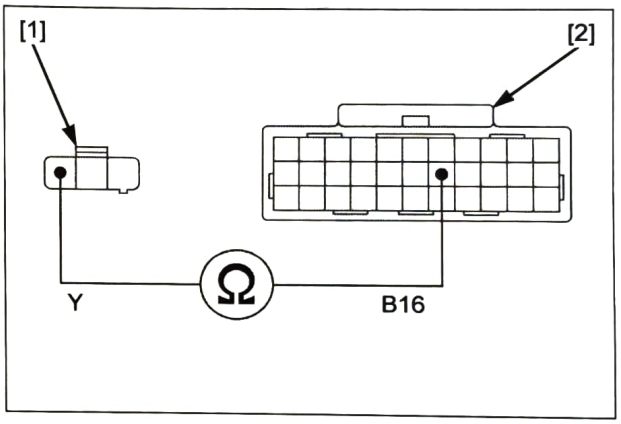

Check for continuity between the wire harness side CKP sensor 3P (Gray) connector [1] terminal and ground.

CONNECTION: Yellow – Ground

If there is continuity, check for a short circuit in the Yellow wire.

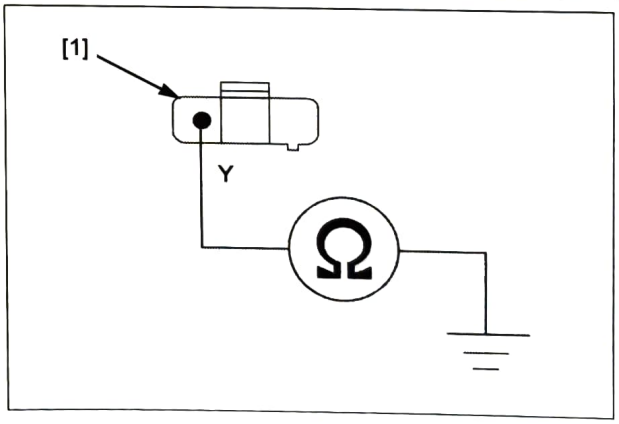

IGNITION TIMING

Warm up the engine.

Stop the engine and remove the timing hole cap.

Connect the timing light [1] to the No.1-2 spark plug wire.

NOTE:

- Read the instructions for timing light operation.

Start the engine and let it idle.

IDLE SPEED: 1,250 ± 100 rpm

The ignition timing is correct if the "F" mark [2] on the flywheel aligns with the index mark [3] on the alternator cover.

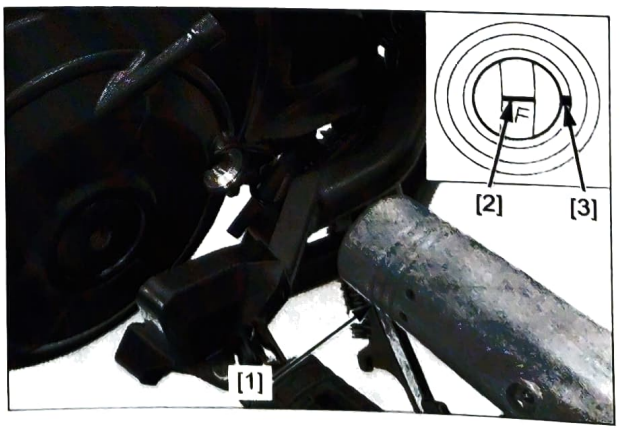

Apply engine oil to a new O-ring [1] and install it to the timing hole cap [2].

Apply grease to the timing hole cap threads.

Install and tighten the timing hole cap to the specified torque.

TORQUE: 6.0 N·m (0.6 kgf·m, 4.4 lbf·ft)

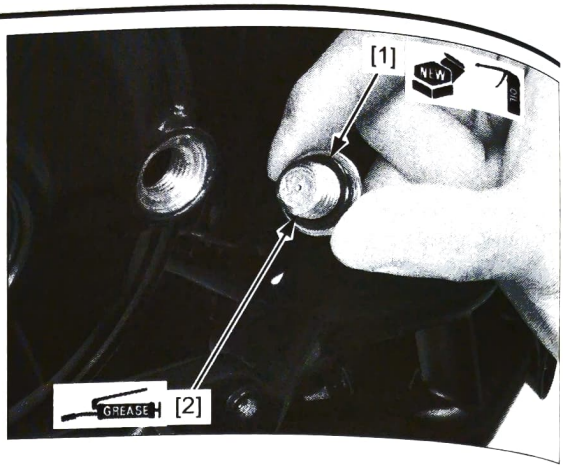

IGNITION COIL

REMOVAL/INSTALLATION

Remove the air cleaner housing (page 7-10).

Disconnect th connectors [1] from the ignition coils [2].

Remove the ignition coils.

Install the removed parts in the reverse order of removal.

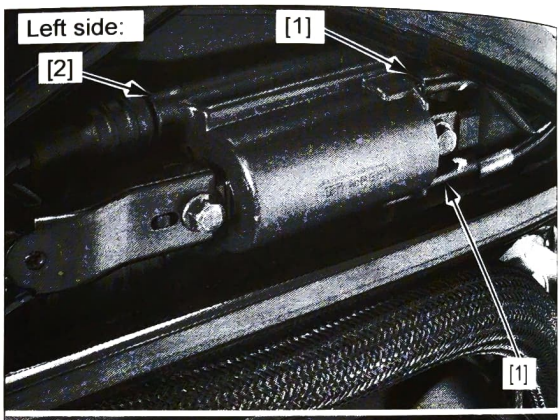

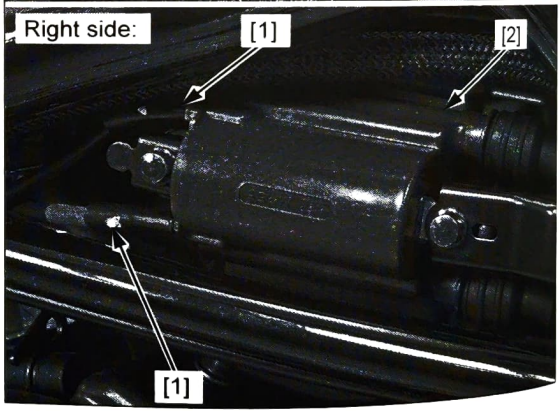

6. ELECTRIC STARTER

SERVICE INFORMATION 6-2
TROUBLESHOOTING 6-3
SYSTEM LOCATION 6-4
SYSTEM DIAGRAM 6-5
STARTER MOTOR 6-7
STARTER RELAY SWITCH 6-9
STARTER RELAY 6-12

SERVICE INFORMATION

GENERAL

NOTICE

If the current is kept flowing through the starter motor while the engine is not cranking over, the starter motor may be damaged.

- The starter motor can be serviced with the engine installed in the frame.
- Always turn the ignition switch OFF before servicing the starter motor. The motor could suddenly start, causing serious injury.
- A weak battery may be unable to turn the starter motor quickly enough, or supply adequate ignition current.
- When servicing the starter system, always follow the steps in the troubleshooting flow chart (page 6-3).
- Refer to the following components information:
  - Neutral switch (DCT type) (page 13-63)
  - Neutral switch (MT type) (page 22-24)
  - Ignition switch (page 22-18)
  - Starter switch (right handlebar switch) (page 22-20)
  - Engine stop switch (right handlebar switch) (page 22-20)
  - Clutch switch (MT type) (page 22-23)
  - Sidestand switch (page 22-24)
  - The following color codes are used throughout this section.

Be = Beige	Bl = Black	Br = Brown	Bu = Blue	G = Green	Gr = Gray
Lb = Light blue	Lg = Light green	O = Orange	P = Pink	R = Red	V = Violet
W = White	Y = Yellow				

TROUBLESHOOTING

Unusual condition			Probable cause (Check in numerical order)
Starter motor does not turn	DCT type:		1. Loose or poor contact on related connectors and terminals 2. Blown fuse 3. Weak battery 4. Faulty CAN communication 5. Faulty starter relay switch 6. Faulty starter relay or its related circuits 7. Faulty neutral switch or its related circuits 8. Faulty TR sensor or its related circuits 9. Faulty starter motor or its related circuits 10. Faulty right handlebar switch or its related circuits 11. Faulty TCM 12. Faulty ECM (in case when above No. 1 through 11 are normal)
	MT type:	When the transmission is in any gear with the sidestand retracted and clutch lever pulled in	1. Loose or poor contact on related connectors and terminals 2. Blown fuse 3. Weak battery 4. Faulty starter relay switch 5. Faulty starter relay or its related circuits 6. Faulty clutch switch or its related circuits 7. Faulty clutch cruise cancel switch or its related circuits 8. Faulty sidestand switch or its related circuits 9. Faulty starter motor or its related circuits 10. Faulty right handlebar switch or its related circuits 11. Faulty ECM (in case when above No. 1 through 10 are normal)
		When the transmission is in neutral with the sidestand lowered and clutch lever released	1. Loose or poor contact on related connectors and terminals 2. Blown fuse 3. Weak battery 4. Faulty starter relay switch 5. Faulty starter relay or its related circuits 6. Faulty neutral switch or its related circuits 7. Faulty GP sensor or its related circuits 8. Faulty starter motor or its related circuits 9. Faulty right handlebar switch or its related circuits 10. Faulty ECM (in case when above No. 1 through 9 are normal)
Starter motor turns slowly			1. Low battery voltage 2. Poorly connected battery terminal cable 3. Poorly connected starter motor cable 4. Faulty starter motor 5. Poorly connected battery ground cable
Starter motor turns, but engine does not turn			1. Starter motor is running backwards – Case assembled improperly – Terminals connected improperly 2. Faulty starter clutch 3. Damaged or faulty starter pinion gear and/or reduction gears
Starter relay switch "Clicks", but engine does not turn over			1. Crankshaft does not turn due to engine problems

SYSTEM LOCATION

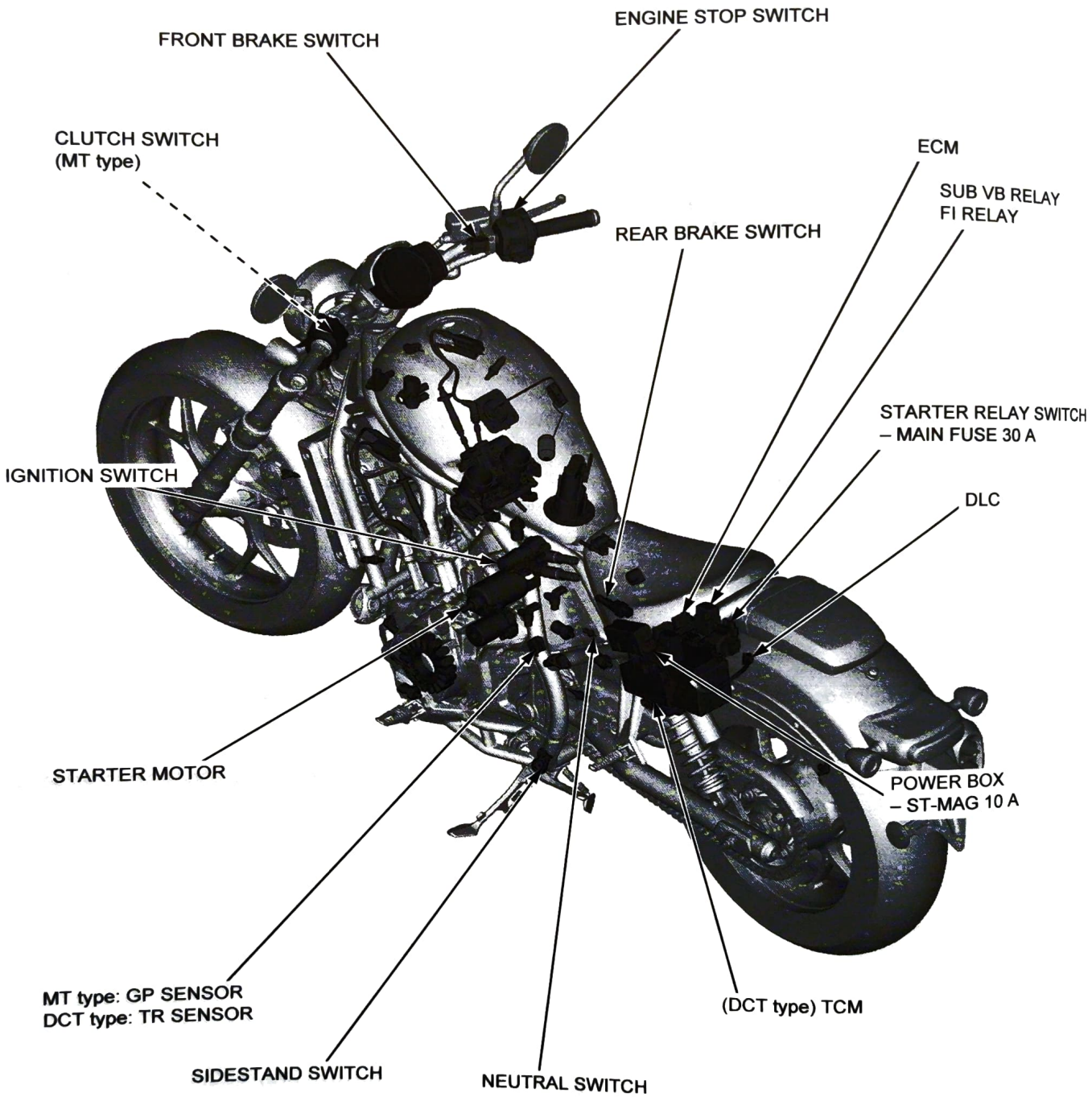

SYSTEM DIAGRAM

MT type:

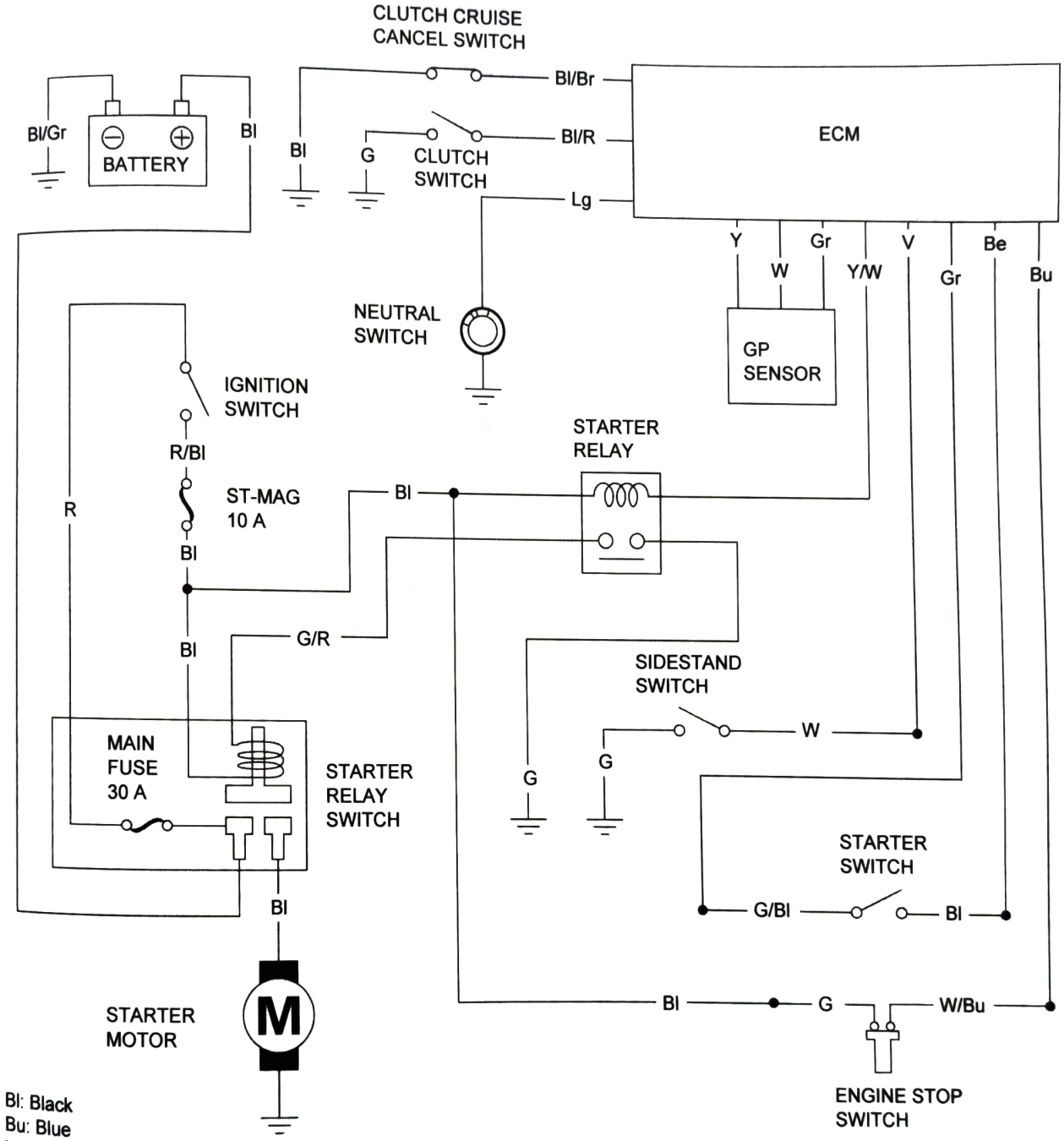

Bl: Black
Bu: Blue
Y: Yellow
G: Green
R: Red
W: White
Lg: Light green
Be: Beige
Gr: Gray
V: Violet
Br: Brown

DCT type:

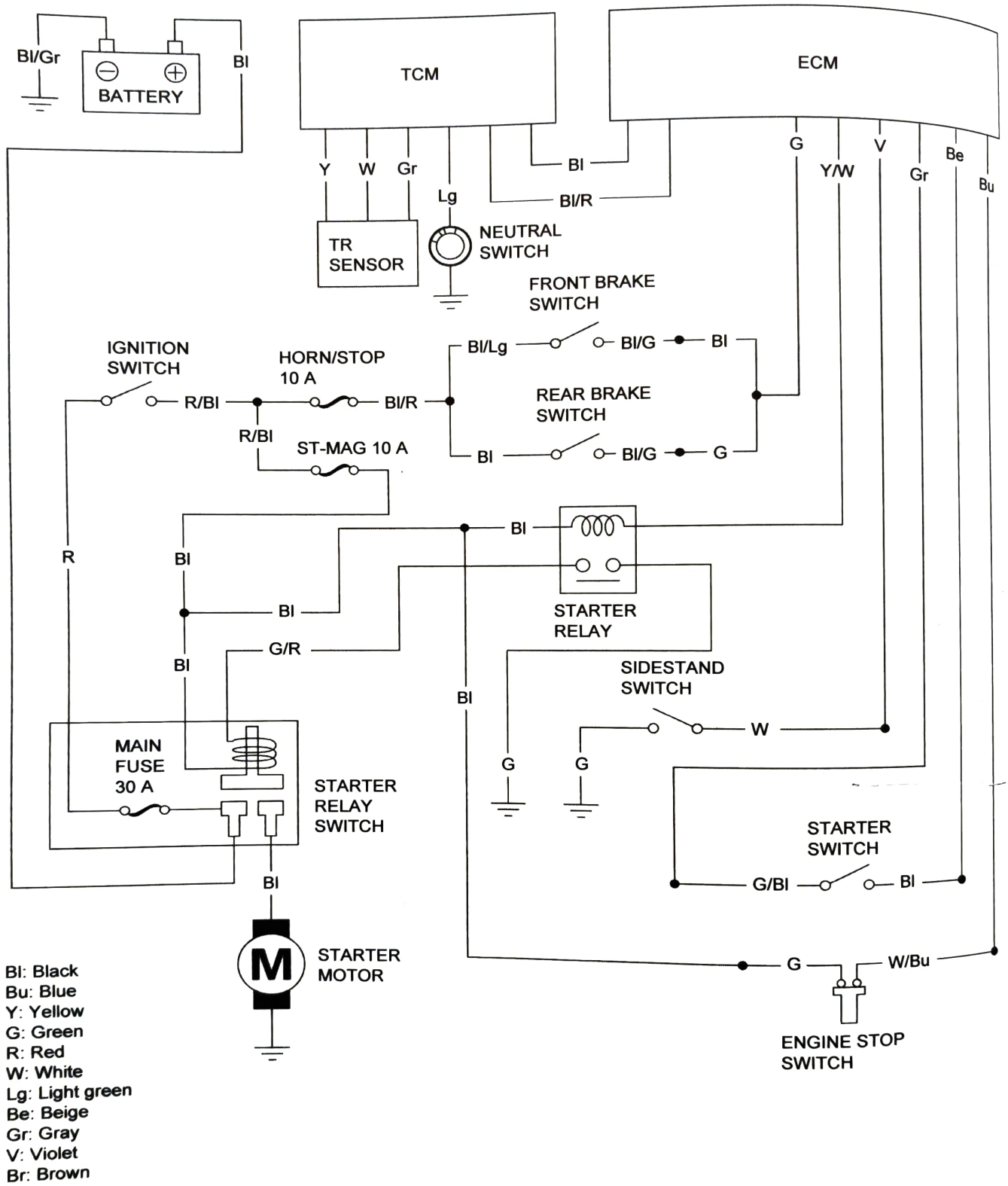

Bl: Black
Bu: Blue
Y: Yellow
G: Green
R: Red
W: White
Lg: Light green
Be: Beige
Gr: Gray
V: Violet
Br: Brown

STARTER MOTOR

REMOVAL/INSTALLATION

Remove the ABS modulator tray (page 20-25).

Release the boots [1].

Remove the starter motor cable terminal nut/washer [2] and disconnect the starter motor cable [3].

Remove the bolts [4] and disconnect the battery (–) negative cable [5].

Remove the starter motor [6].

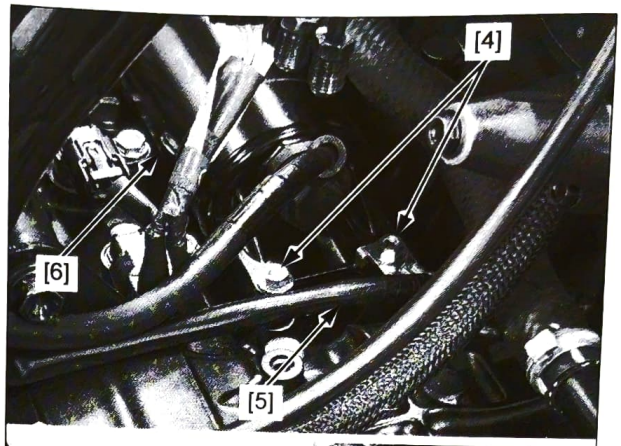

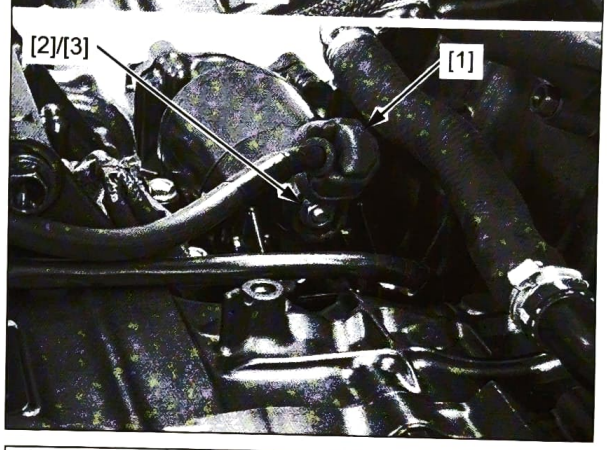

Remove the O-ring [1].

Installation is in the reverse order of removal.

TORQUE:

Starter motor cable terminal nut/washer:
10 N·m (1.0 kgf·m, 7 lbf·ft)

NOTE:

- Replace the O-ring with a new one.
- Apply engine oil to the new O-ring.

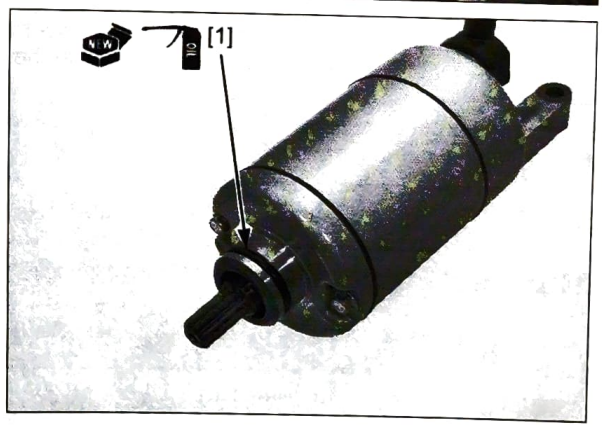

DISASSEMBLY/ASSEMBLY

NOTICE

The coil may be damaged if the magnet pulls the armature against the motor case.

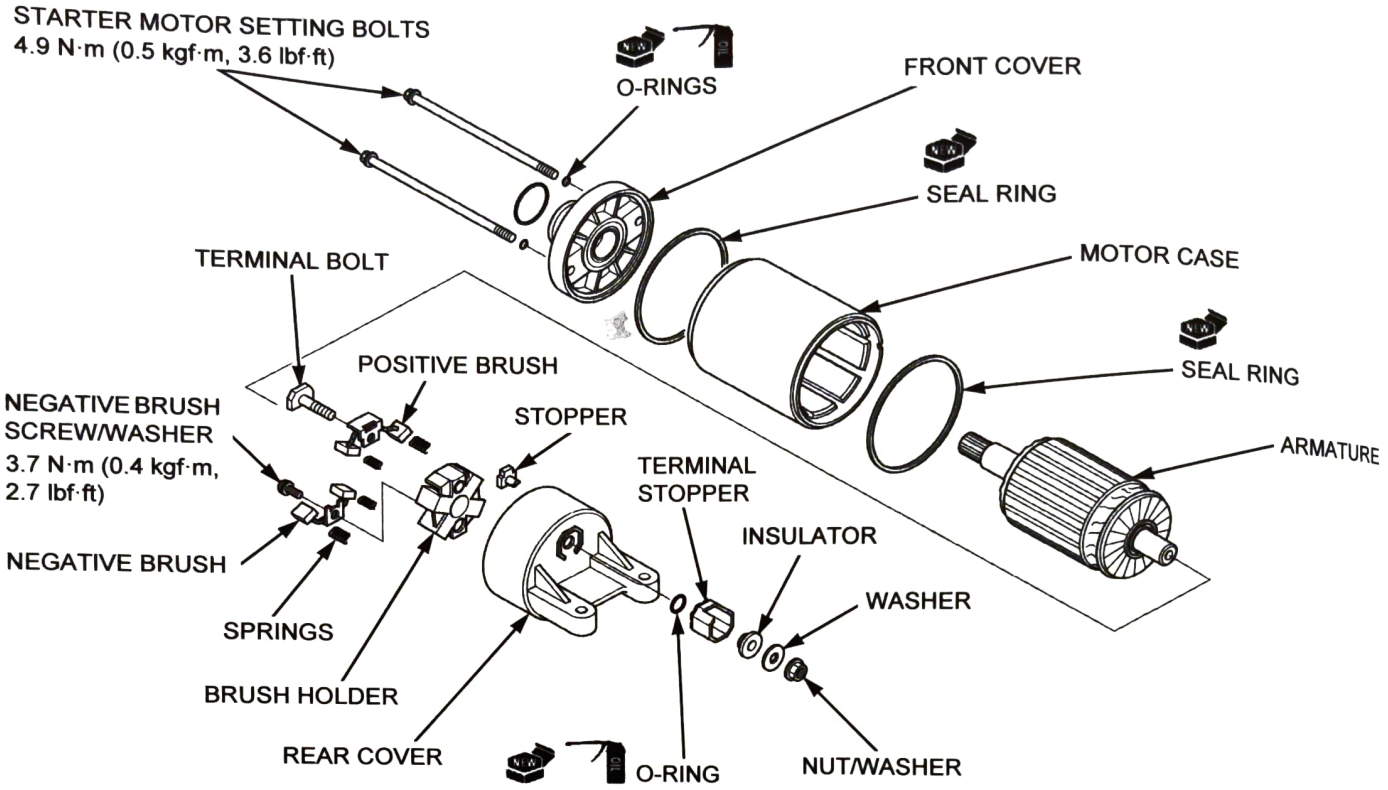

When installing the front cover [1] and rear cover [2] onto the motor case [3], align the lines as shown.

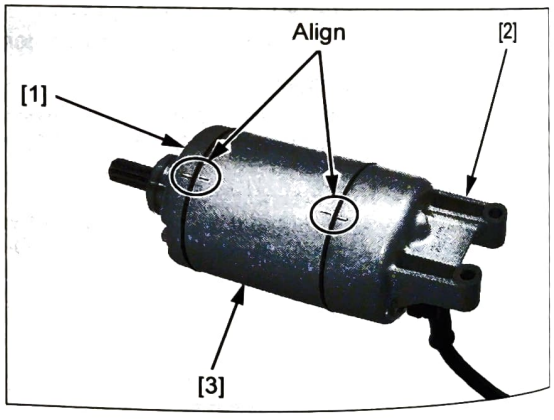

INSPECTION

FRONT COVER

Check the oil seal [1] in the front cover for deterioration, wear, or damage.

Turn the inner race of the bearing [2] in the front cover with your finger.

The bearing should turn smoothly and quietly.

Also check that the outer race fits tightly in the front cover.

Replace the starter motor as an assembly if necessary.

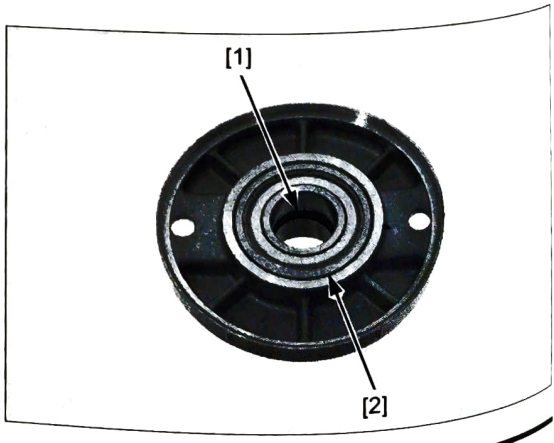

REAR COVER

Check for continuity or no continuity for each part of rear cover [1] as below:

- Between the positive brush [2] and cable terminal [3]: should be continuity.
- Between the cable terminal and the rear cover: should be no continuity.
- Between the positive brush and rear cover: should be no continuity.
- Between positive brush and negative brush [4]: should be no continuity.

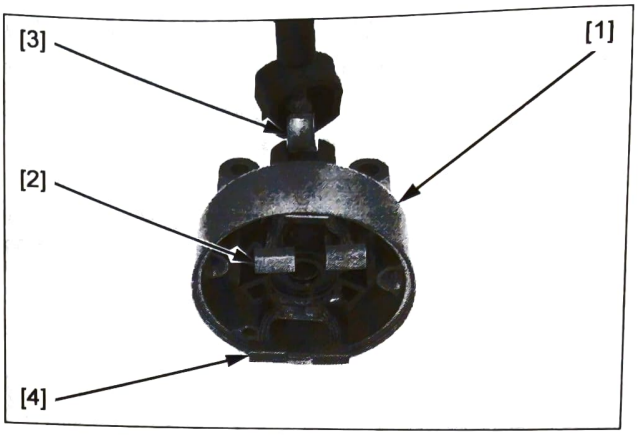

ARMATURE

Clean the metallic debris off the commutator bars [1].

Check the commutator bars for discoloration.

Check for continuity on the armature as below:

- Between pair of commutator bars: there should be continuity.
- Between each commutator bar and the armature shaft [2]: should be no continuity.

Replace the starter motor as an assembly if necessary.

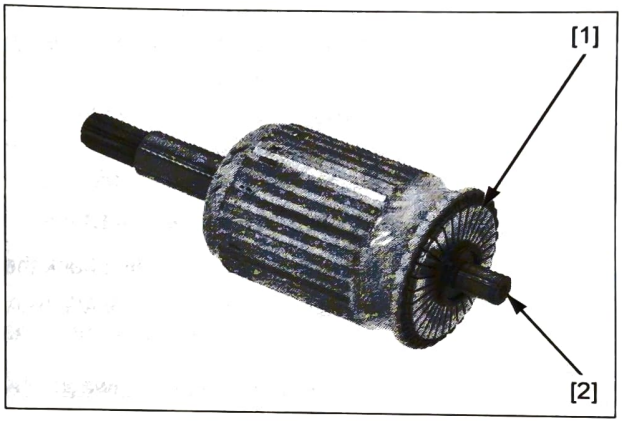

STARTER RELAY SWITCH

REMOVAL/INSTALLATION

Remove the tool box (page 2-12).

Remove the starter relay switch cover [1].

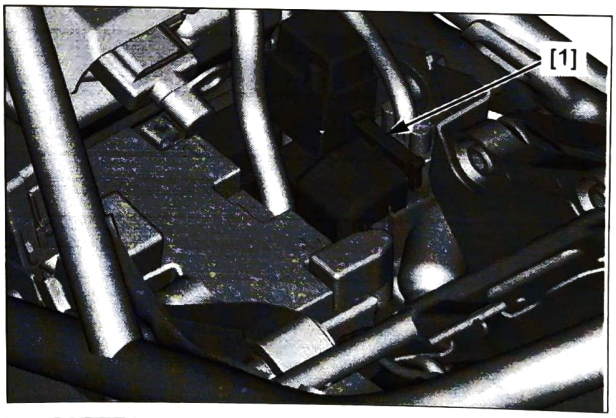

Disconnect the starter relay switch 4P (Black) connector [1].

Remove the bolts [2].

Disconnect the starter motor cable [3] and battery positive (+) cable [4].

Release the starter relay switch [5] from the battery box.

Installation is in the reverse order of removal.

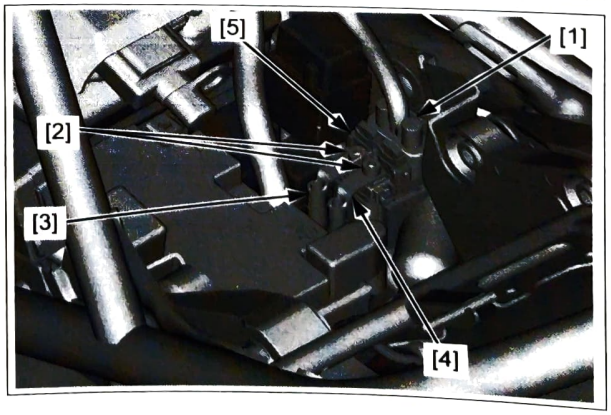

INSPECTION

Remove the tool box (page 2-12).

Shift the transmission into neutral.

Turn the ignition switch ON and engine stop switch "○".
Push the starter switch.

The coil is normal if the starter relay switch [1] clicks.

If you don't hear the starter relay switch "CLICK", inspect the starter relay switch as follows:

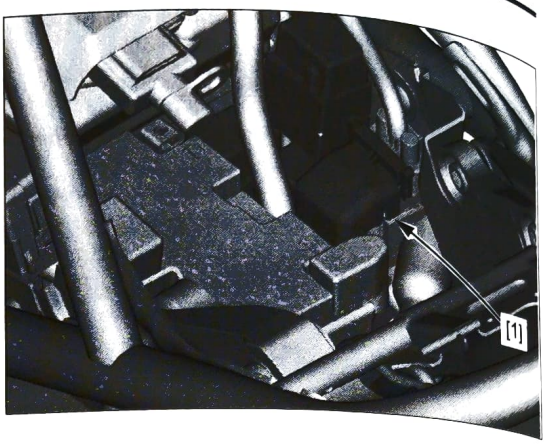

STARTER RELAY SWITCH INPUT VOLTAGE LINE INSPECTION

Disconnect the starter relay switch 4P (Black) connector (page 6-9).

Turn the ignition switch ON.

Check for continuity between the wire harness side starter relay switch 4P (Black) connector [1] terminals.

CONNECTION: Red – Black

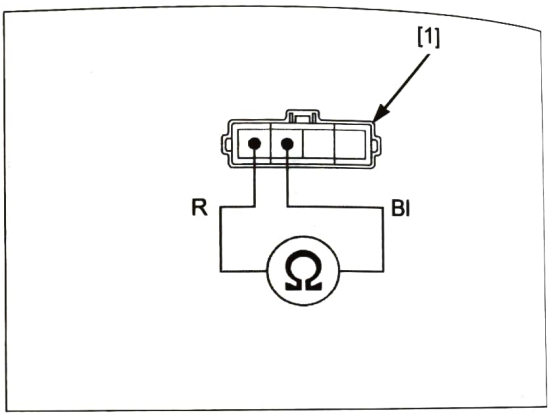

If there is no continuity, check the following:

- Blown sub fuse ST-MAG 10 A
- Red wire between the starter relay switch and ignition switch
- Red/black wire between the ignition switch and power box
- Black wire between the power box and starter relay switch
- Ignition switch

STARTER RELAY SWITCH GROUND LINE INSPECTION

Remove the starter relay (page 6-12).

Connect the wire harness side starter relay 4P connector [1] terminals with a jumper wire [2].

CONNECTION: Green/red – Green

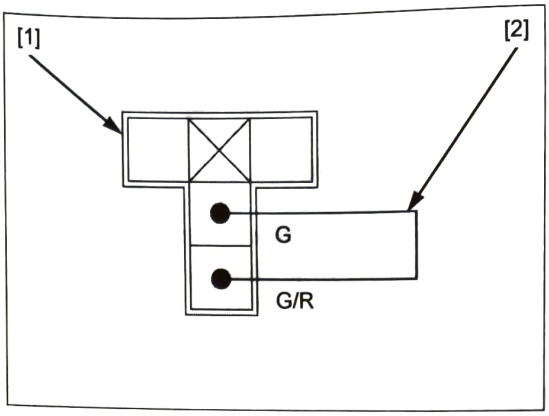

Check for continuity between the wire harness side starter relay switch 4P (Black) connector [1] terminal and ground.

CONNECTION: Green/red – Ground

If there is no continuity, check the following:

- Green/red wire between the starter relay switch and starter relay
- Green wire between the starter relay and ground

If wires are OK, check the starter relay.

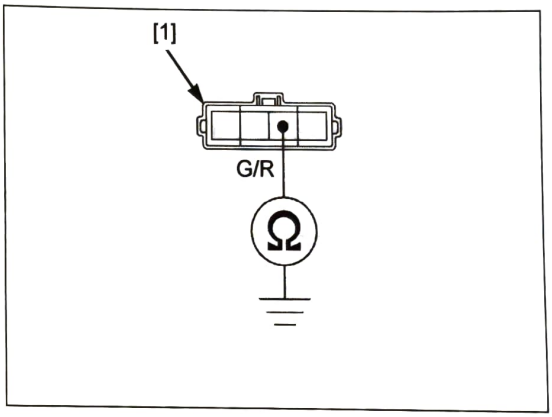

OPERATION CHECK

Remove the starter relay switch (page 6-9).

Connect a 12 V battery to the starter relay switch as shown.

There should be continuity between the cable terminals when the battery is connected, and no continuity when the battery is disconnected.

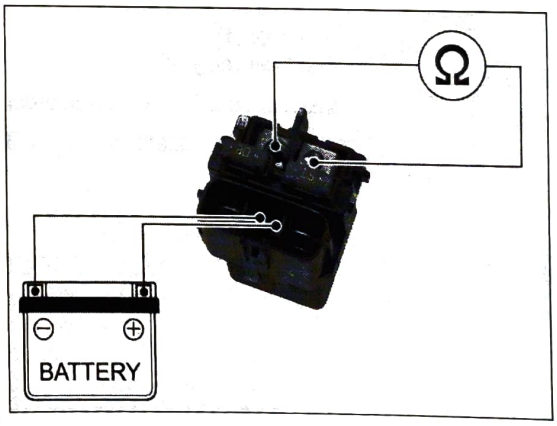

STARTER RELAY

REMOVAL/INSTALLATION

Remove the following:

- starter relay switch (page 6-9)
- battery (page 21-5)

Release the SUB VB/FI relay connector mounting clip [1] and remove the SUB VB/FI relay connector [2].

Installation is in the reverse order of removal.

- For relay inspection (page 4-63)

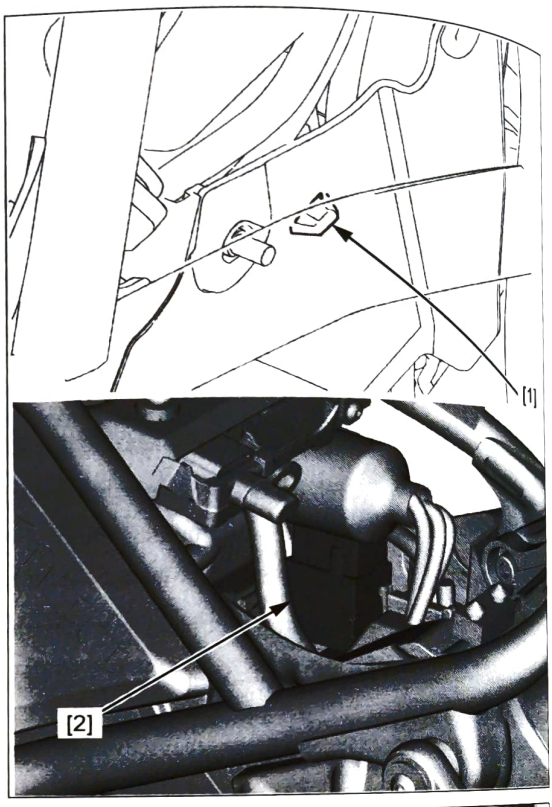

Remove the following:

- cover [1]
- stater relay [2]

Installation is in the reverse order of removal.

- For relay inspection (page 4-63)

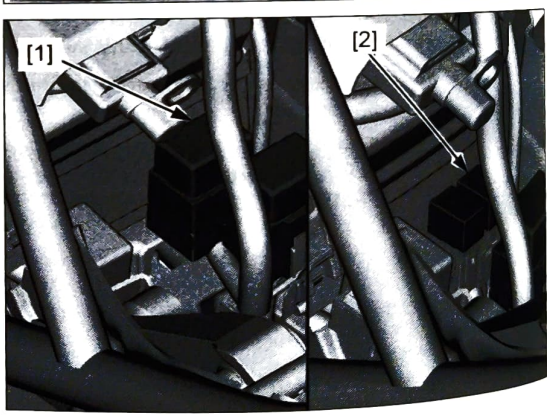

7. FUEL SYSTEM

SERVICE INFORMATION 7-2

COMPONENT LOCATION 7-3

FUEL LINE INSPECTION 7-4

FUEL TANK 7-6

FUEL FILLER CAP 7-7

FUEL PUMP UNIT 7-7

AIR CLEANER HOUSING 7-10

THROTTLE BODY 7-11

FUEL INJECTOR 7-13

SECONDARY AIR SUPPLY SYSTEM 7-14

EVAP PURGE CONTROL SOLENOID VALVE 7-18

EVAP CANISTER 7-19

FUEL PUMP RELAY 7-19

SERVICE INFORMATION

GENERAL

- Before disconnecting the fuel feed hose, relieve fuel pressure from the system by disconnecting the quick connect fitting from the system (page 7-4).
- Bending or twisting the control cables will impair smooth operation and could cause the cables to stick or bind, resulting in loss of vehicle control.
- Do not snap the throttle valve from full open to full close after the throttle cable has been removed. It may cause incorrect idle operation.
- Seal the intake ports with tape or a clean cloth to keep dirt and debris from entering the engine after the throttle body or fuel rail has been removed.
- Do not damage the throttle body. It may cause incorrect throttle valve operation.
- Prevent dirt and debris from entering the throttle bore and air passages after the throttle body has been removed. Clean them using compressed air if necessary.
- Do not apply commercially available carburetor cleaners to the inside of the throttle bore, which is coated with molybdenum.
- Do not loosen or tighten the white painted bolt and screw of the throttle body. Loosening or tightening them can cause throttle valve and idle control failure.
- For fuel level sensor inspection (page 22-17).

TOOLS

Fuel pressure gauge 07406-0040004 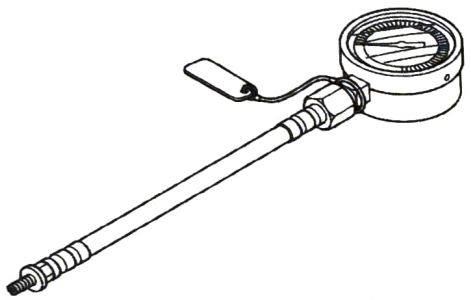 or 07406-004000B (U.S.A. only) or 07406-004000C (U.S.A. only)	Pressure gauge attachment set 070MJ-K260100 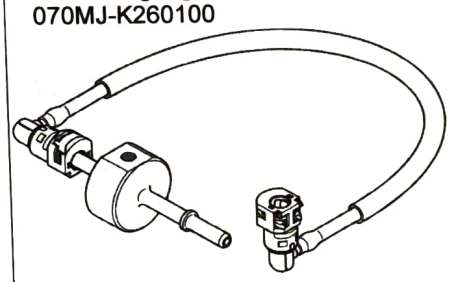 Not available in U.S.A.	Hose attachment, 6 mm/9 mm 07ZAJ-S5A0130 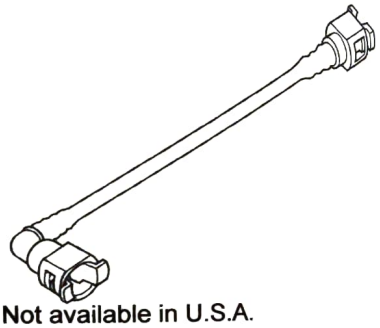 Not available in U.S.A.
Hose attachment, 8 mm/9 mm 07ZAJ-S7C0100 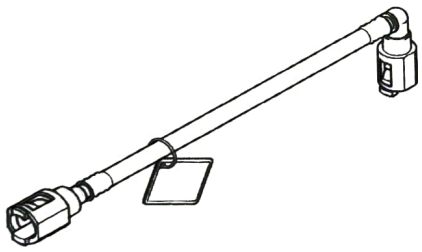 Not available in U.S.A.	Attachment joint, 8 mm/9 mm 07ZAJ-S7C0200 (Not available in U.S.A.) 	Attachment joint, 6 mm/9 mm 07ZAJ-S5A0150 (Not available in U.S.A.) 
Fuel pressure manifold hose 07AMJ-HW3A100 (U.S.A. only) 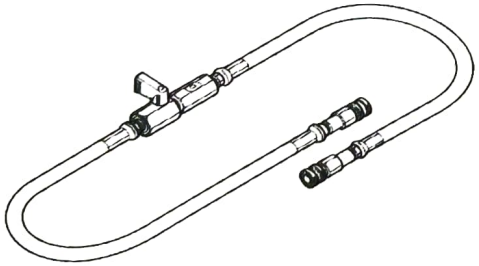	Pressure gauge adaptor "C" 07AAJ-S6MA300 (U.S.A. only) 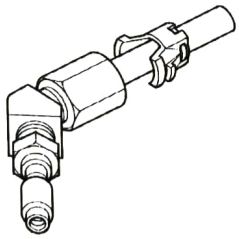	Pressure gauge adaptor "C" 07AAJ-S6MA500 (U.S.A. only) 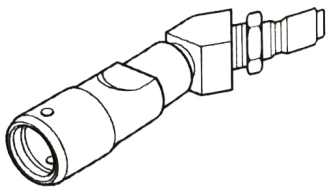

COMPONENT LOCATION



FUEL LINE INSPECTION

FUEL PRESSURE RELIEVING

NOTE:
Before disconnecting fuel feed hose, relieve pressure from the system as follows.

1. Turn the ignition switch OFF.
2. Lift the fuel tank and support it (page 3-4).
3. Disconnect the fuel pump 5P (Black) connector [1].
4. Start the engine, and let it idle until the engine stalls.
5. Turn the ignition switch OFF.

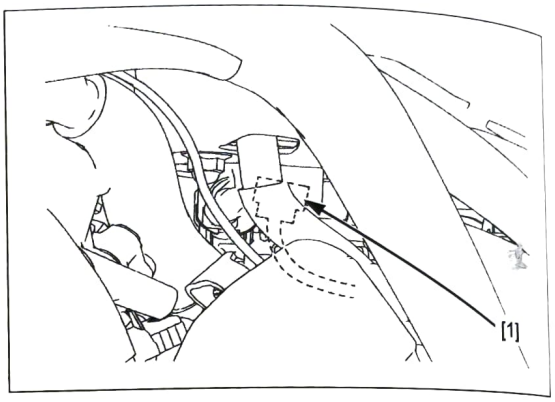

QUICK CONNECT FITTING REMOVAL/INSTALLATION

NOTE:
- Clean around the quick connect fitting before disconnecting the fuel feed hose, and be sure that no dirt is allowed to enter into the fuel system.
- Do not bend or twist the fuel feed hose.

Relieve the fuel pressure (page 7-4).

Disconnect the battery negative (–) cable (page 21-5).

Push the retainer tab [1] forward.

Press down the retainer and disconnect the connector [2] from the fuel pump joint/fuel rail.

NOTE:
- To prevent damage and keep foreign matter out, cover the disconnected connector and pipe end with plastic bags [3].

Press the connector onto the fuel pump joint/fuel rail until the retainer locks with a "CLICK".

NOTE:
- If it is hard to connect, put a small amount of engine oil on the pipe end.

Make sure the connection is secure; check visually by pulling the connector.

Increase the fuel pressure (page 7-4).

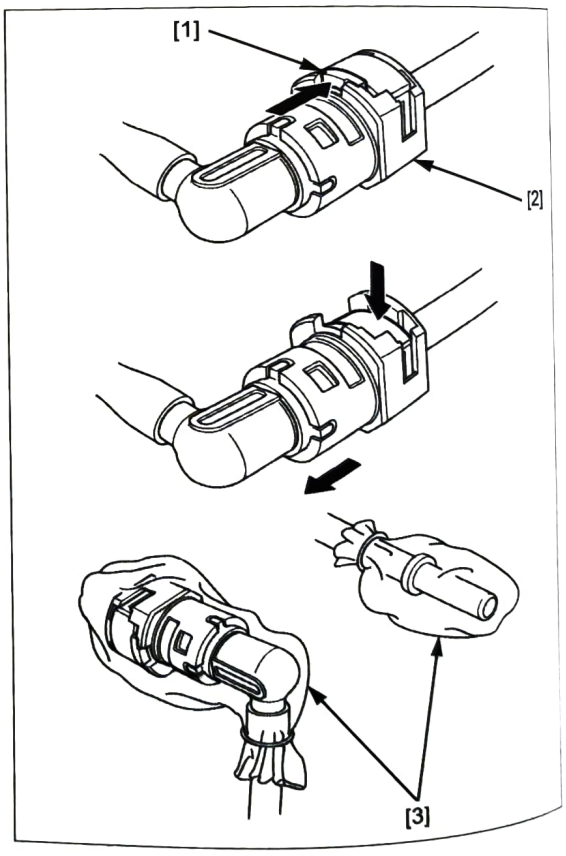

FUEL PRESSURE NORMALIZATION

1. Be sure the fuel pump 5P (Black) connector [1] is connected.
2. Turn the ignition switch ON with the engine stop switch "○".

NOTE:

- Do not start the engine.

The fuel pump will run for about 2 seconds, and fuel pressure will rise.

Turn the ignition switch OFF.

3. Repeat step 2 two or three times, and check that there is no leakage.
4. Install the fuel tank properly (page 3-4).

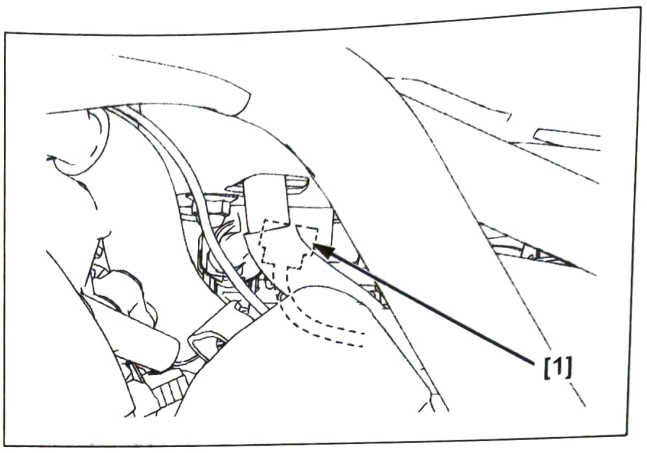

FUEL PRESSURE TEST

Relieve the fuel pressure (page 7-4).
Disconnect the quick connect fitting (fuel pump side) (page 7-4).

Attach the special tools between the fuel pump joint and fuel feed hose.

TOOLS:

Fuel pressure gauge [1]	**07406-0040004**
Pressure gauge attachment set [2]	**070MJ-K260100**
Hose attachment, 6 mm/9 mm [3]	**07ZAJ-S5A0130**
Hose attachment, 8 mm/9 mm [4]	**07ZAJ-S7C0100**
Attachment joint, 8 mm/9 mm [5]	**07ZAJ-S7C0200**
Attachment joint, 6 mm/9 mm [6]	**07ZAJ-S5A0150**

U.S.A. TOOLS:

Fuel pressure gauge	**07406-004000B or 07406-004000C**
Fuel pressure manifold hose	**07AMJ-HW3A100**
Pressure gauge adaptor "C"	**07AAJ-S6MA300**
Pressure gauge adaptor "C"	**07AAJ-S6MA500**

Temporarily connect the battery negative (–) cable and fuel pump unit 5P (Black) connector.
Start the engine and let it idle.
Read the fuel pressure.

STANDARD:

324 – 367 kPa (3.3 – 3.7 kgf/cm², 47 – 53 psi)

If the fuel pressure is higher than specified, replace the fuel pump unit.
If the fuel pressure is lower than specified, inspect the following:

- Fuel line leaking
- Pinched or clogged fuel tank breather hose
- Fuel pump unit (page 7-7)

After inspection, relieve the fuel pressure (page 7-4).

Remove the special tools.

Connect the quick connect fitting (page 7-4).

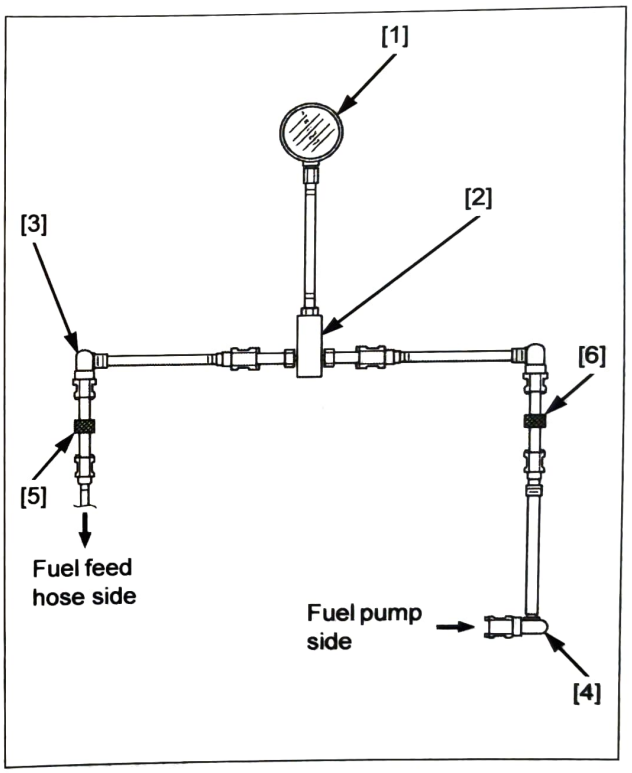

FUEL FLOW INSPECTION

Disconnect the quick connect fitting from the fuel rail (page 7-4).

Place the end of the fuel feed hose [1] into an approved fuel container.

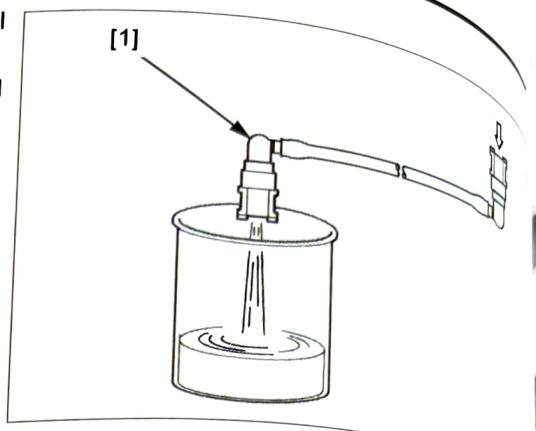

NOTE:
- Clean up any spilled fuel.

Temporarily connect the battery negative (–) cable and fuel pump unit 5P (Black) connector.

Turn the ignition switch ON.

Measure the amount of fuel flow.

NOTE:
- The fuel pump operates for 2 seconds. Repeat this procedure 5 times to meet the total measuring time.
- Return fuel to the fuel tank when the measurement is completed.

Amount of fuel flow:
319 cm³ (10.8 US oz, 11.2 Imp oz) minimum/ 10 seconds at 12 V

If the fuel flow is less than specified, inspect the following:

– Pinched or clogged fuel hose or fuel tank breather hose
– Fuel pump unit (page 7-7)

Connect the quick connect fitting (page 7-4).

FUEL TANK

REMOVAL/INSTALLATION

Remove the following:

– main seat (page 2-4)
– combination meter 24P (Gray) connector (page 22-8)
– cover [1]
– fuel tank mounting socket bolt [2]
– fuel tank mounting bolts [3]
– colors [4]
– rubber [5]

Disconnect the following:

– fuel pump 5P (Black) connector [6]
– fuel unit 2P (Black) connector [7]
– fuel tank drain hose [8]
– EVAP canister hose [9]

Relieve the fuel pressure and disconnect the quick connect fitting (page 7-4).

Release the fuel feed hose [10] from the hose guide [11].

Remove the fuel tank [12].

Install the fuel tank in the reverse order of removal.

Connect the quick connect fitting (page 7-4).

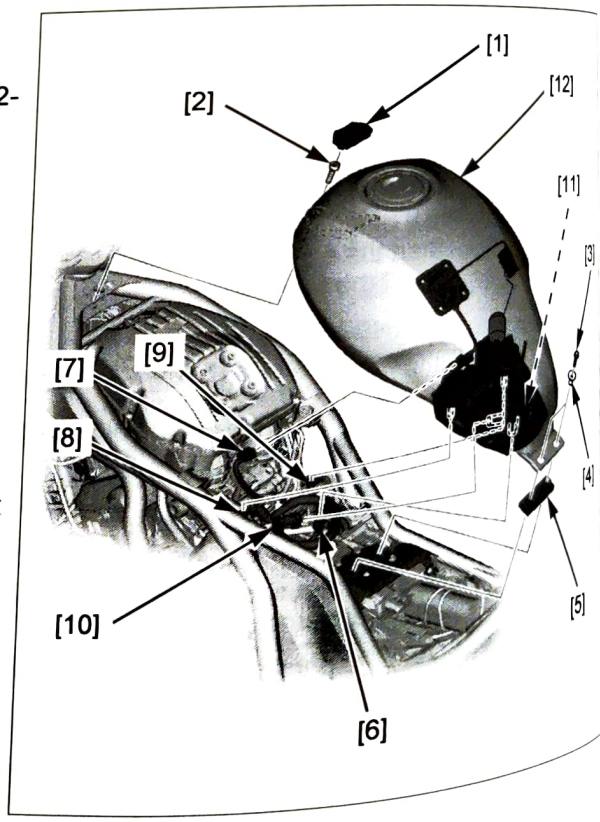

TORQUE:
Front fuel tank mounting socket bolt:
26 N·m (2.7 kgf·m, 19 lbf·ft)
Rear fuel tank mounting bolt:
12 N·m (1.2 kgf·m, 9 lbf·ft)

FUEL FILLER CAP

REMOVAL/INSTALLATION

Remove the following:

- socket bolt [1]
- fuel filler cap [2]
- breathe seal [3]

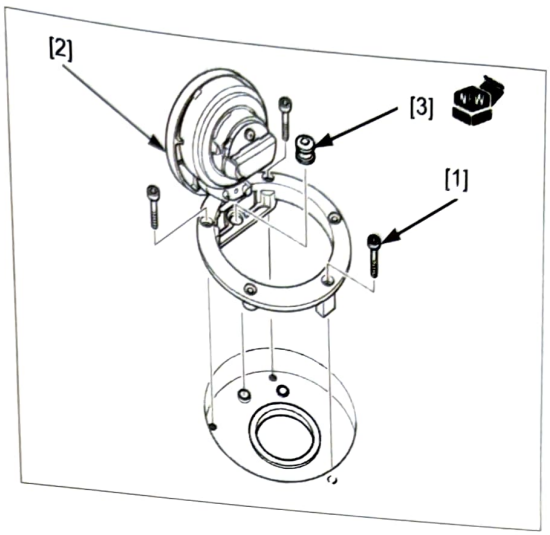

A pressure release can be heard when opening the fuel cap, but this is not blockage of the passage.

If checking for clog in the passage of the fuel tank side is necessary, apply air pressure to the breather hose end with the fuel filler cap opened.

NOTE:

- Replace the breather seal with a new one.

Installation is in the reverse order of removal.

TORQUE:

Fuel filler cap mount bolt:
1.8 N·m (0.2 kgf·m, 1.3 lbf·ft)

FUEL PUMP UNIT

INSPECTION

Turn the ignition switch ON with the engine stop switch "○" and confirm that the fuel pump operates for 2 seconds.

If the fuel pump does not operate, inspect as follows:

Turn the ignition switch OFF.

Lift the fuel tank and support it (page 3-4).

Disconnect the fuel pump 5P (Black) connector [1].

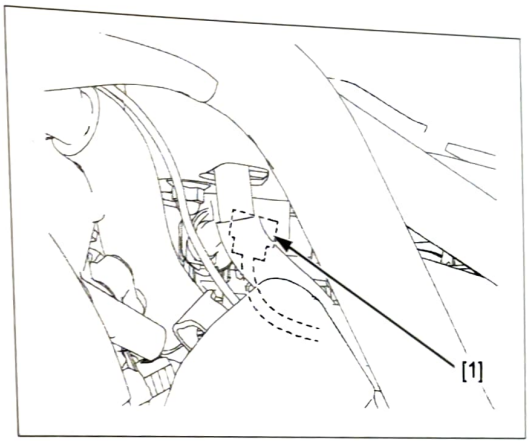

Turn the ignition switch ON with the engine stop switch "○".

Measure the voltage between the terminals of the wire side fuel pump 5P (Black) connector [1].

CONNECTION: Yellow (+) – Green (–)

There should be battery voltage for 2 seconds.

If there is battery voltage, replace the fuel pump unit.

If there is no voltage, inspect the following:

- Black/green wire between the fuel pump and ground for open circuit
- Yellow/red wire between the fuel pump relay and fuel pump for open circuit
- Fuel pump relay and its circuits (page 7-19)
- ECM (page 4-58)

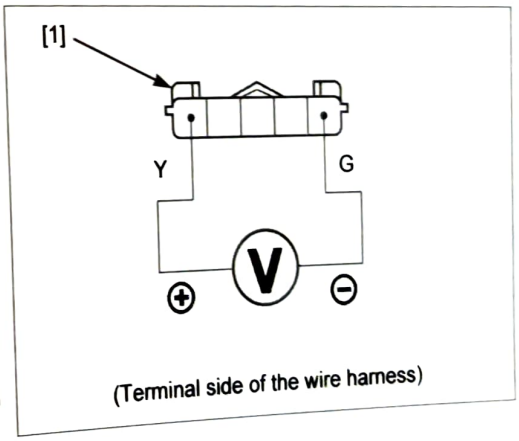

(Terminal side of the wire harness)

REMOVAL/INSTALLATION

Remove the fuel tank (page 7-6).

Clean around the fuel pump.

Loosen the fuel pump unit mounting cap nuts [1] and nuts [2] in a crisscross pattern in 2 or 3 steps.

Release the clip [3].

Remove fuel pump cover [4].

Remove the fuel pump mounting cap nuts.

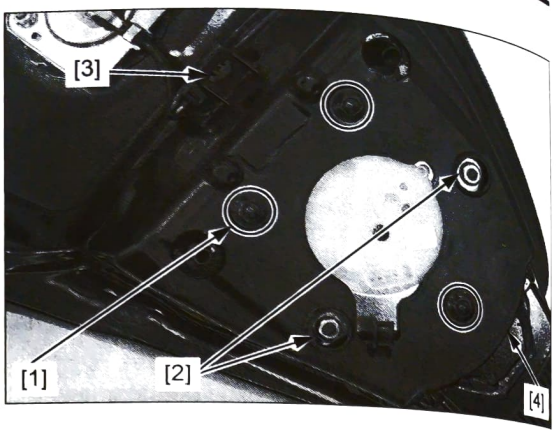

Be careful not to deform the float arm of the fuel level sensor.

Remove the following:

- nuts [1]
- fuel pump plate [2]
- fuel pump unit [3]
- rubber seal [4]

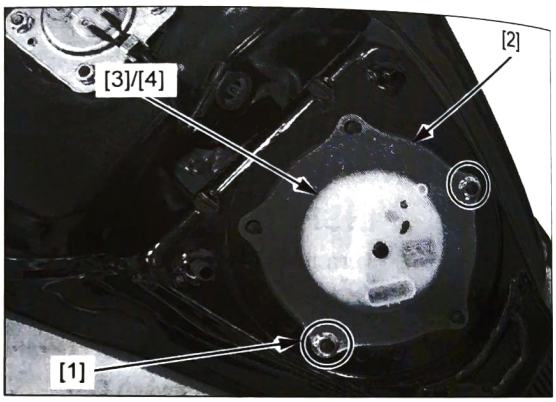

Installation is in the reverse order of removal.

NOTE:

- Replace the rubber seal [1] with a new one.
- Clean the rubber seal seating areas of the fuel tank and fuel pump base plate, and be sure that no foreign materials are allowed.
- Tighten the six mounting nuts to the specified torque in the sequence as shown.

TORQUE:

Fuel pump mounting cap nut/nut:
12 N·m (1.2 kgf·m, 9 lbf·ft)

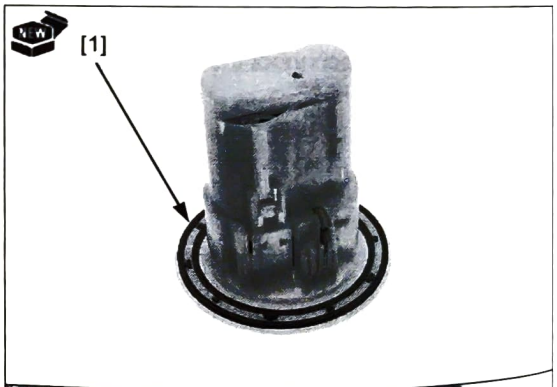

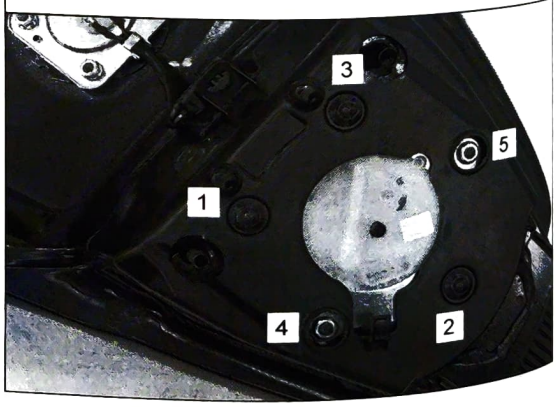

DISASSEMBLY/INSPECTION

Remove the fuel pump (page 7-8)

Disconnect the following:

- Green wire connector [1]
- Yellow wire connector [2]

Release the tabs [3].

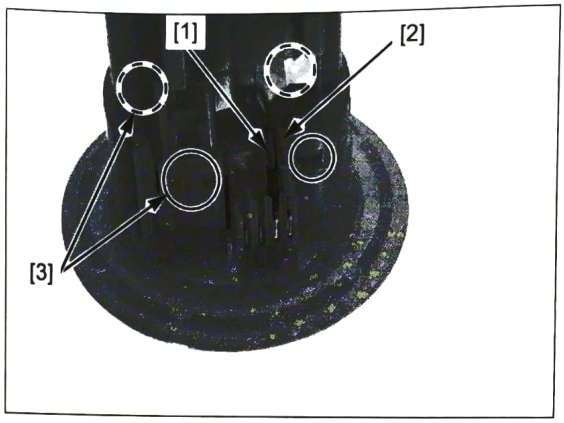

Release the green wire [1] from the guide [2].

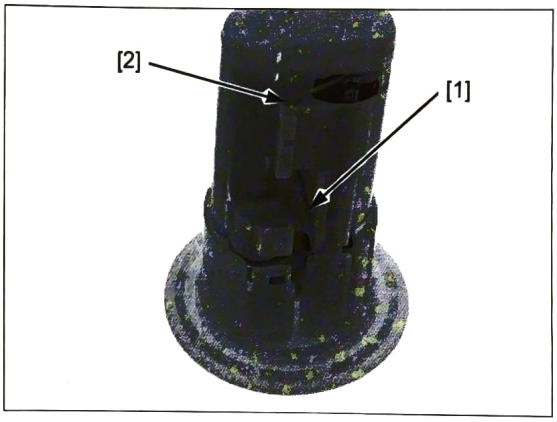

Remove the fuel filter unit [1] and O-ring [2] from the flange [3].

Remove the fuel pump [4] and O-ring [5].

Replace fuel pump as an assembly if the suction filter [6] is abnormal.

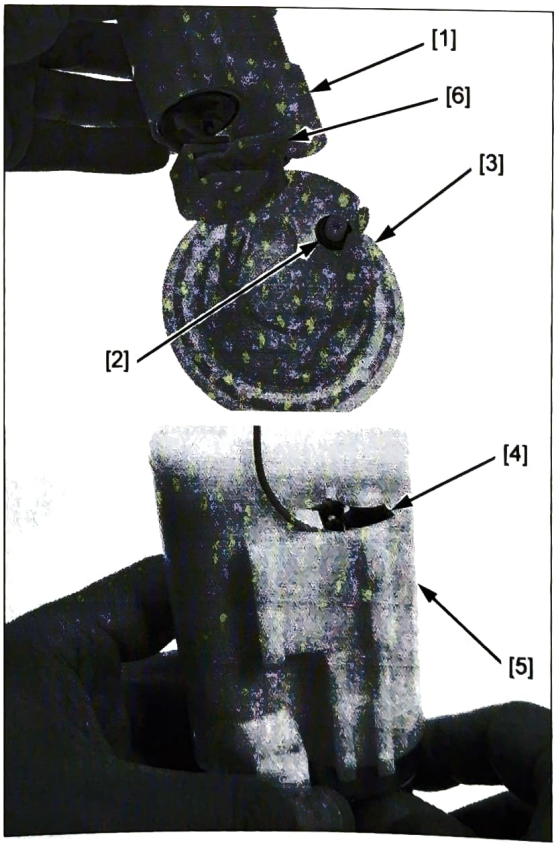

Remove the pressure regulator [1] and O-ring [2] from the fuel filter [3].

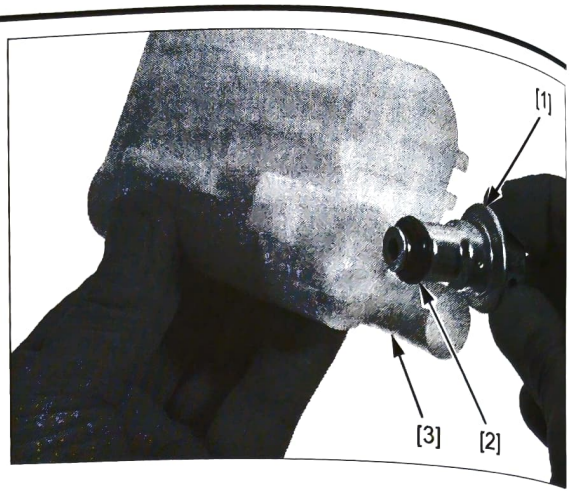

AIR CLEANER HOUSING

REMOVAL/INSTALLATION

Remove the following:

- fuel tank (page 7-6)
- front side cover (page 2-5)
- front air cleaner cover (page 2-5)
- No.1 ignition coil mounting bolts [1]

Release the harness wire from clip [2].

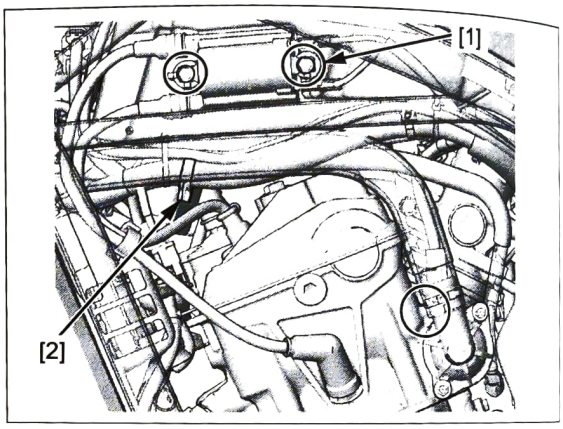

Remove the No.2 ignition coil mounting bolts [1].

Disconnect the following:

- air suction hose [2]
- secondary air supply hose [3]

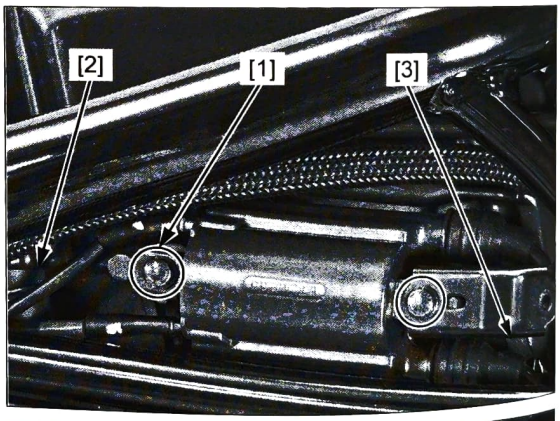

Release the spark plug wires [1] from the clip [2].

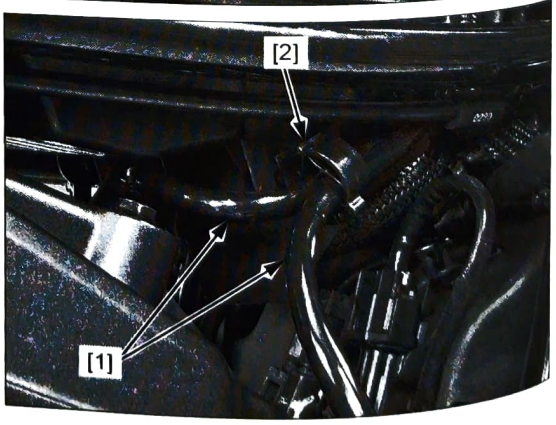

Disconnect the IAT sensor 2P (Blue) sensor [1].

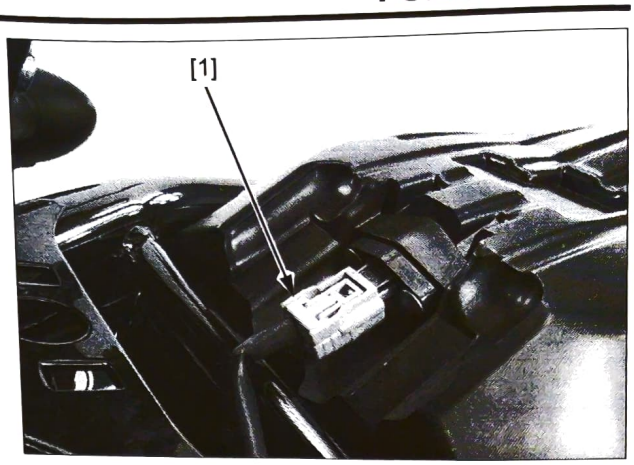

Loosen the two insulator band screws [1].

Remove the two bolts [2].

Release the air cleaner housing [3] from the throttle body.

Release the air cleaner housing boss [4] from the grommet [5] and remove it.

Installation is in the reverse order of removal.

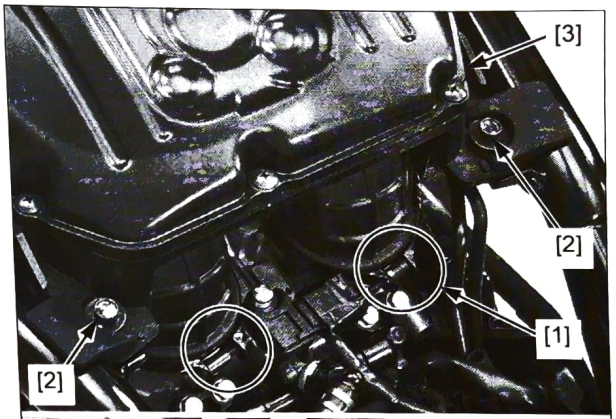

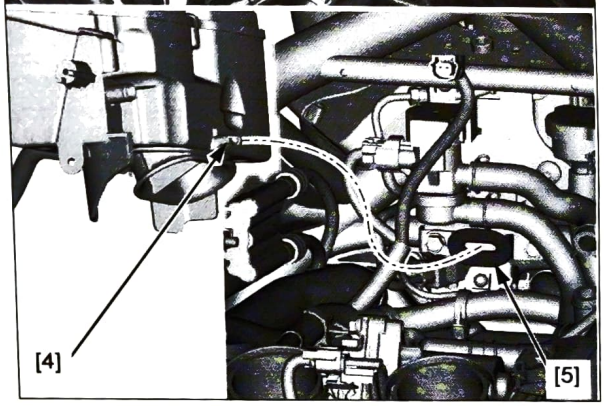

THROTTLE BODY

REMOVAL/INSTALLATION

Remove the following:

- air cleaner housing (page 7-10)
- MAP sensor screw/washer [1]

Disconnect the following:

- TBW motor 2P (Gray) connector [2]
- fuel feed hose [3]

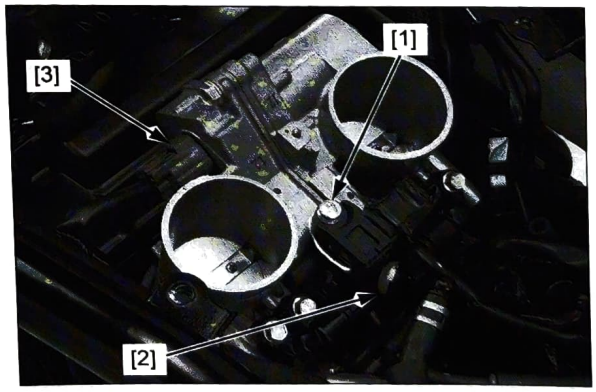

Disconnect the TBW unit 6P (Black) connector [1].

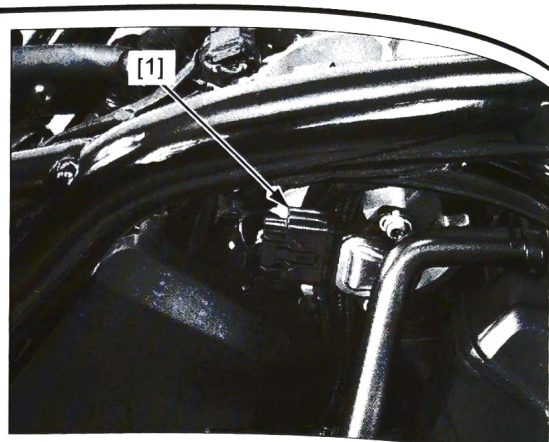

Loosen the two insulator band screws [1].

Remove the throttle body [2].

Installation is in the reverse order of removal.

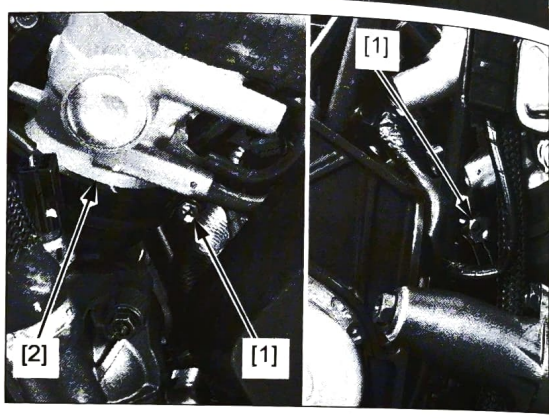

NOTICE

- *Do not loosen or tighten the white painted screws [1], nut [2], and bolts [3] of the throttle body. Loosening or tightening any of these can cause throttle valve and idle control failure.*

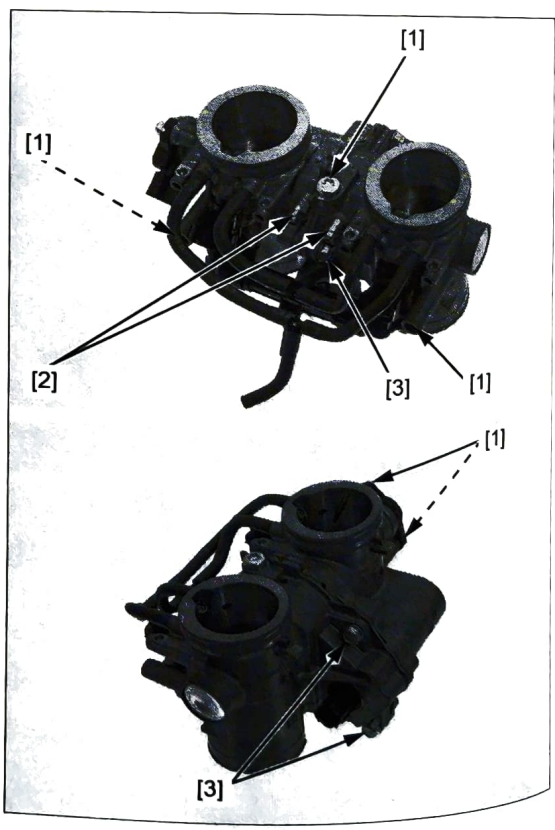

Installation is in the reverse order of removal.

MAP sensor screw:
TORQUE: 4.9 N·m (0.5 kgf·m, 3.6 lbf·ft)

NOTE:
- Route the wires and hoses properly (page 1-27).
- Align the insulator band holes with the insulator bosses.
- Tighten the insulator band screws [1] until the collars [2] are fully seated.

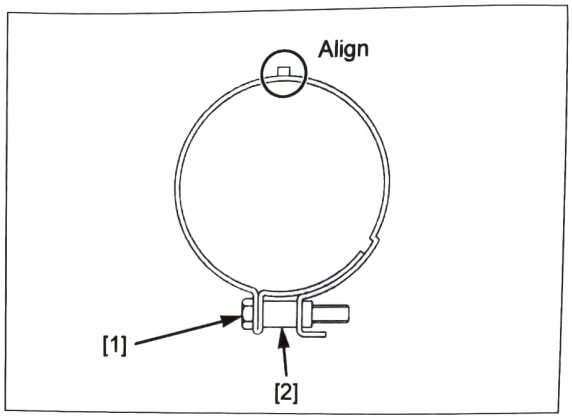

FUEL INJECTOR

REMOVAL

Remove the following:

– fuel tank (page 7-6)
– fuel feed hose [1]

Release the band clip [2].

Disconnect the MAP sensor 3P (Black) connector [3].

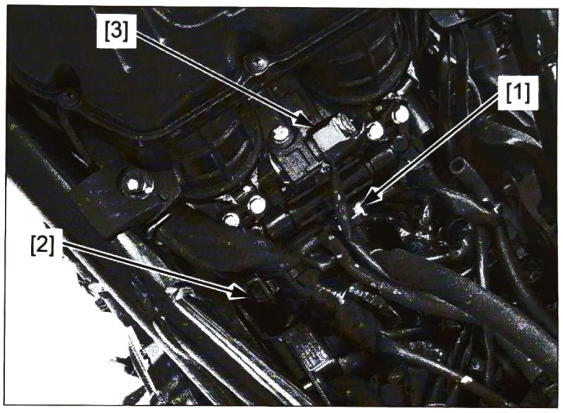

Clean around the fuel injector base with compressed air.

Disconnect the fuel injector 2P (Gray) connectors [1].

Remove the fuel injector assembly mounting bolts [2] and fuel injector assembly [3].

Disconnect the quick connect fitting from the fuel rail (page 7-4).

NOTE:
- Be sure that no debris is allowed to enter the combustion chamber.

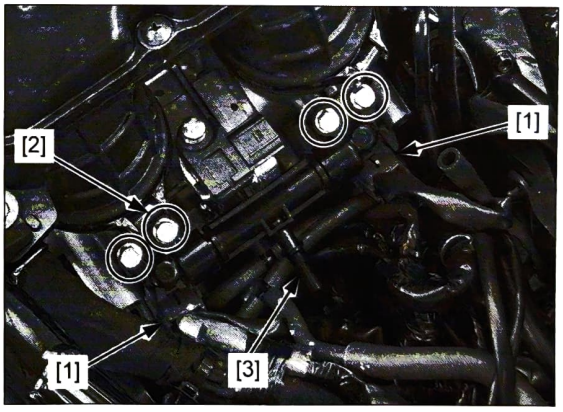

Remove the fuel injectors [1] from the fuel injector joints [2].

Remove the seal rings [3] and O-rings [4] from the fuel injectors.

Remove the fuel injector joints and O-rings [5] from the fuel rail [6].

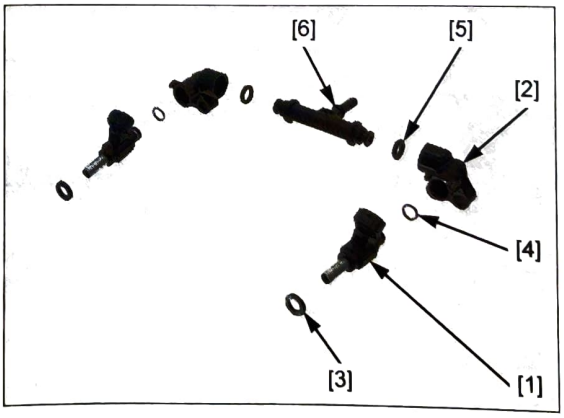

INSTALLATION

Apply engine oil to new O-rings.
Install the O-rings [1] and fuel injector joints [2] to the fuel rail [3].

Apply engine oil to new seal rings and new O-rings.
Install the seal rings [4] and O-rings [5] to the fuel injectors [6].

Install the fuel injectors to the fuel injector joints.

NOTE:
- Align the fuel injector connectors with the fuel joint tabs [7] as shown.

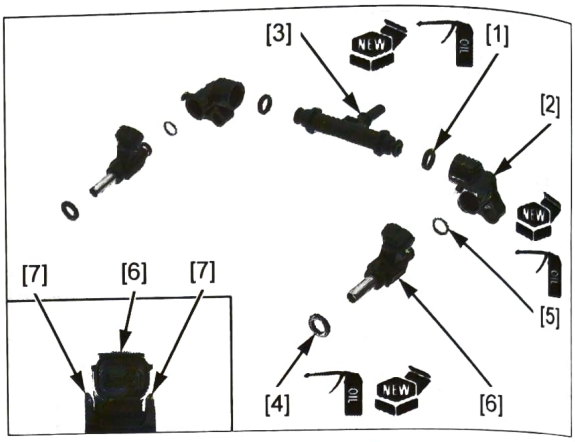

Connect the quick connect fitting to the fuel rail (page 7-4).

Install the fuel injector assembly [1].

NOTE:
- When installing the fuel injector, be careful not to damage the seal ring.

Install and tighten the fuel injector assembly mounting bolts [2] to the specified torque.

TORQUE: 5.1 N·m (0.5 kgf·m, 3.8 lbf·ft)

Connect the fuel injector 2P connectors [3].

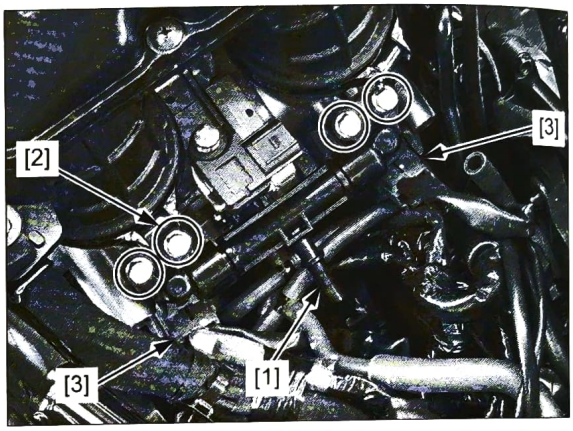

Connect the MAP sensor 3P (Black) connector [1].

Install the following:
- band clip [2]
- fuel feed hose [3]
- fuel tank (page 7-6)

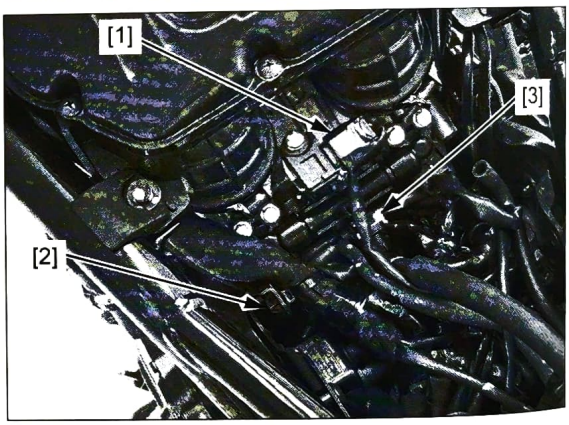

SECONDARY AIR SUPPLY SYSTEM

SYSTEM INSPECTION

Start the engine and warm it up to normal operating temperature.

Stop the engine.

Remove the air cleaner housing (page 7-10).
Remove the hose clip [1] and disconnect the air supply hose [2] from the air cleaner housing.

Check that the hose joint (secondary air intake port) [3] of the air cleaner housing is clean and free of carbon deposits.
Check the PAIR check valve if the port is carbon fouled (page 7-16).

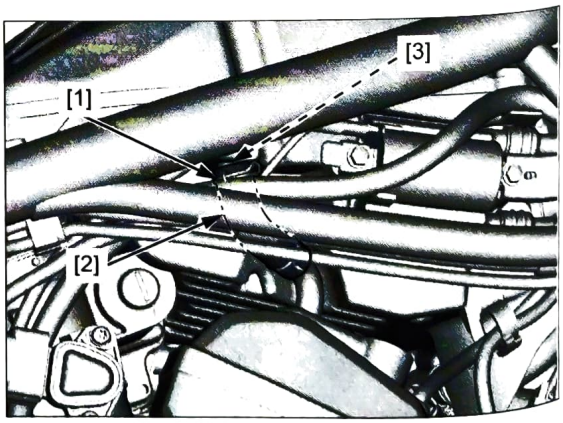

Lower the fuel tank until the fuel pump 3P (Black) connector can be connected and support it.

Temporarily connect the fuel pump 3P (Black) connector.

Start the engine and open the throttle slightly to be certain that air is sucked in through the disconnected air suction hose [1].

If the air is not drawn in, check the air suction hose and air supply hose [2] for clogs.

If the hoses are OK, check the PAIR control solenoid valve [3] (page 7-16).

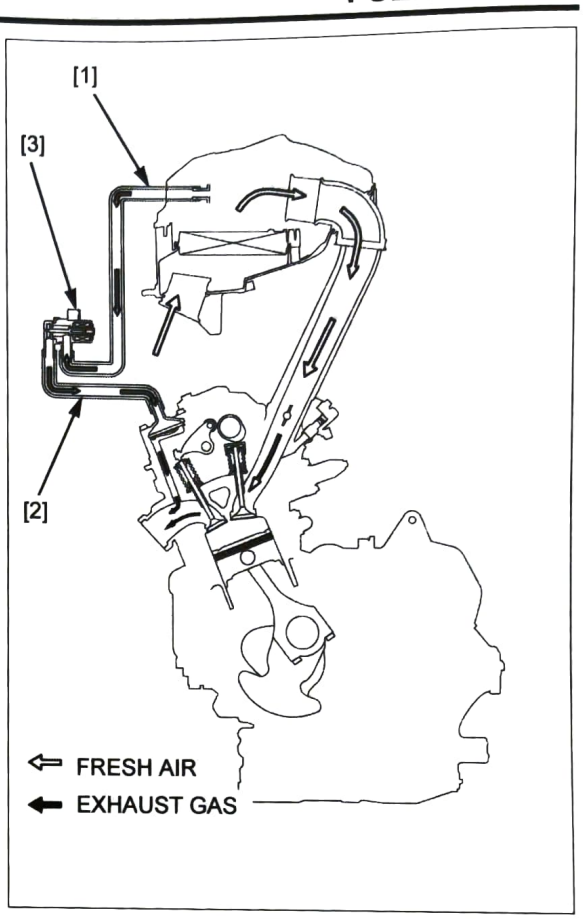

PAIR CONTROL SOLENOID VALVE REMOVAL/INSTALLATION

Remove the following:

- air cleaner housing (page 7-10)
- front air cleaner side cover (page 2-5)
- socket bolt [1]
- bolt [2]

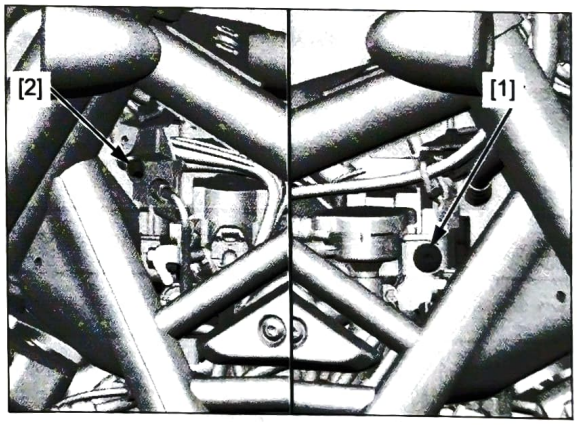

Disconnect the PAIR control solenoid valve 2P (Black) connector [1].

Disconnect the air supply hoses [2] to remove the PAIR control solenoid valve [3].

Remove the two bolts [4].

Disconnect the bank angle sensor 2P (Black) connector [5].

Remove the pair control solenoid valve stay [6].

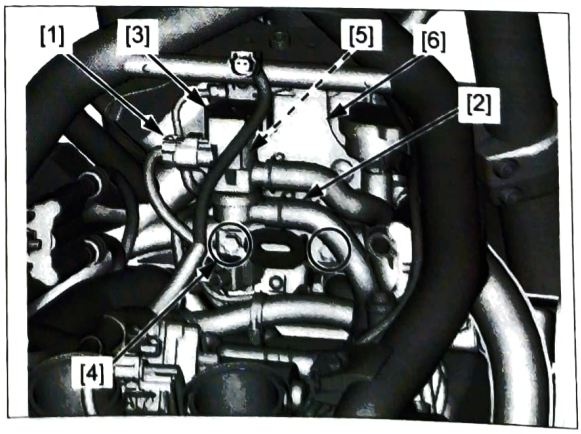

Remove the following:

- socket bolt [1]
- grommet [2]
- color [3]
- pair control solenoid valve [4]

Installation is in the reverse order of removal.

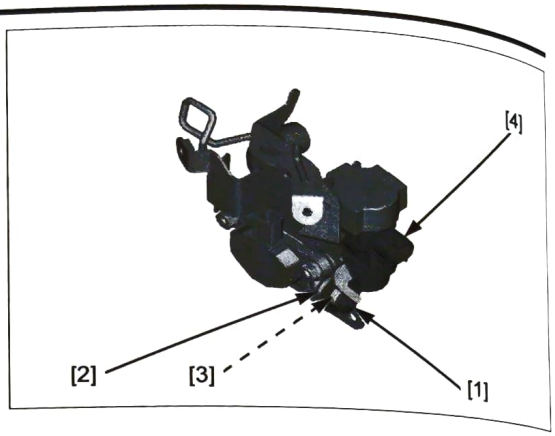

PAIR CONTROL SOLENOID VALVE INSPECTION

Remove the PAIR control solenoid valve (page 7-15).

Check the air flow through the solenoid valve.

Air should flow from input hose fitting (A) to output hose fitting (B).

Connect a 12 V battery to the 2P connector [1] terminals of the PAIR control solenoid valve.

Air should not flow when the battery is connected.

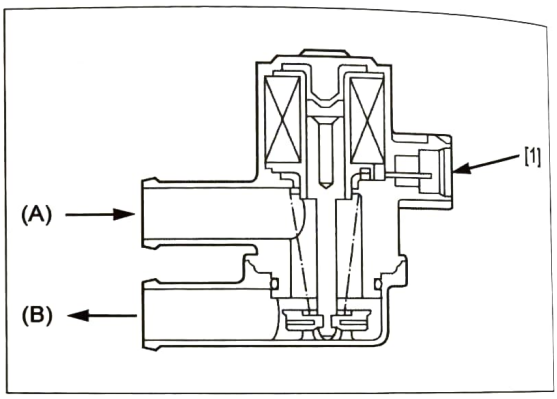

Measure the resistance between the 2P connector [1] terminals of the PAIR control solenoid valve.

STANDARD: 24 – 28 Ω (20°C/68°F)

If the resistance is out of the specification, replace the PAIR control solenoid valve.

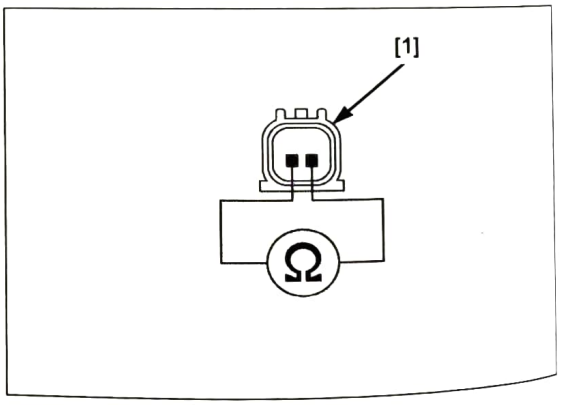

PAIR REED VALVE

REMOVAL/INSTALLATION

Remove the cylinder head cover (page 10-5).

Remove the PAIR reed valve cover bolts [1].

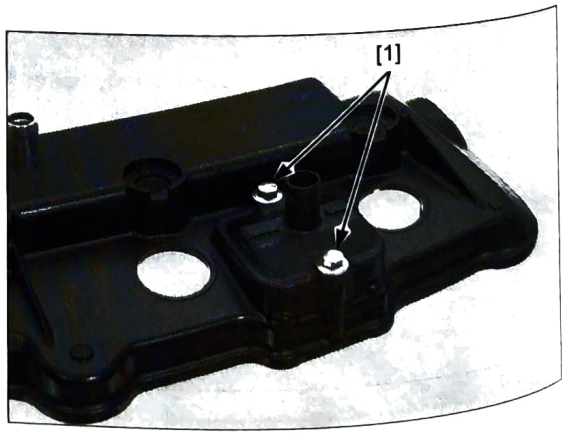

Remove the PAIR reed valve cover [1].

NOTE:

- When installing the PAIR reed valve cover, align the boss of the PAIR reed valve cover with the hole of the PAIR reed valve.

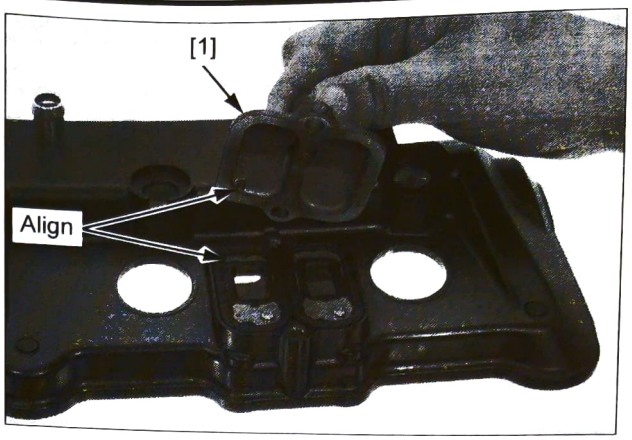

Remove the PAIR reed valves [1] and port plates [2].

Installation is in the reverse order of removal.

TORQUE:

PAIR reed valve cover bolt:
12 N·m (1.2 kgf·m, 9 lbf·ft)

NOTE:

- Install the PAIR reed valves and port plates as shown.

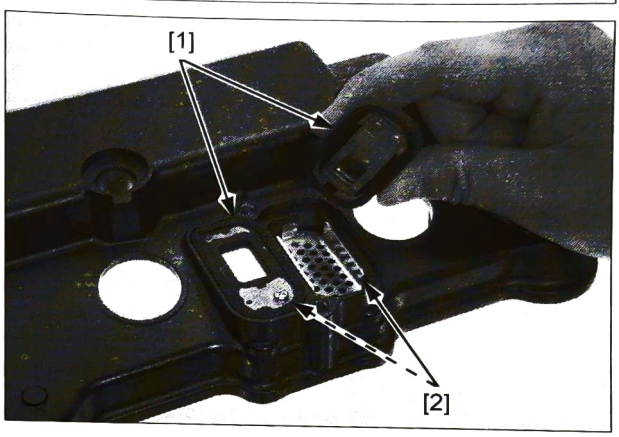

INSPECTION

Remove the PAIR reed valves (page 7-16).

Check the reed valve [1] for damage or fatigue. Replace if necessary.

Replace the PAIR check valve if the rubber seat [2] is cracked, deteriorated or damaged, or if there is clearance between the reed and seat.

Install the PAIR reed valves (page 7-16).

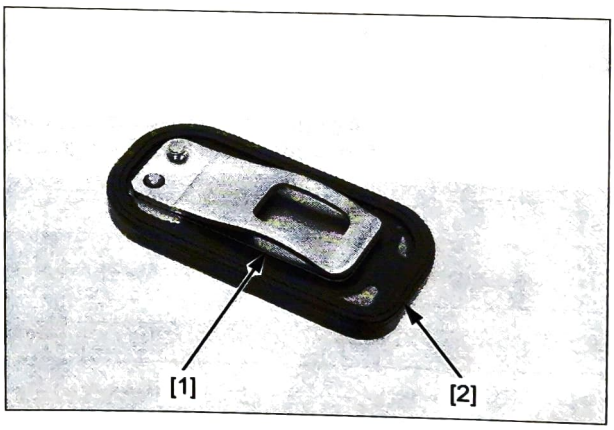

EVAP PURGE CONTROL SOLENOID VALVE

REMOVAL/INSTALLATION

Remove the following:

- fuel tank (page 7-6)
- two nuts [1]

Disconnect the following:

- EVAP purge control solenoid valve 2P (Black) connector [1]
- EVAP purge control solenoid valve-to-throttle body hose [2]
- EVAP canister-to-EVAP purge control solenoid valve hose [3]

Installation is in the reverse order of removal.

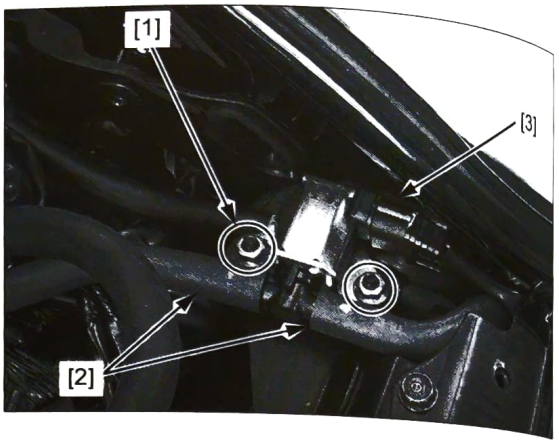

INSPECTION

Remove the EVAP purge control solenoid valve (page 7-18).

Check the air flow through the solenoid valve.

Air should not flow from input hose fitting (A) to output hose fitting (B).

Connect a 12 V battery to the EVAP purge control solenoid valve 2P connector [1] terminals.

Air should flow when the battery is connected.

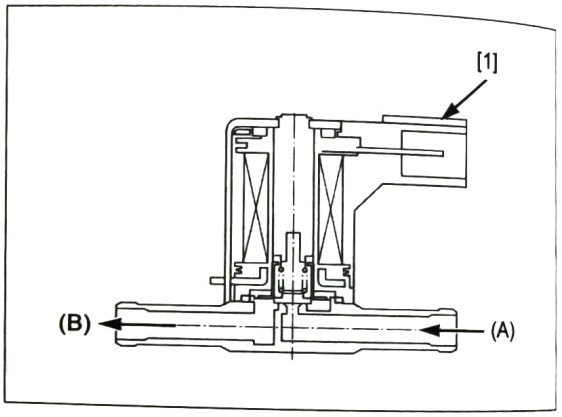

Measure the resistance between the 2P connector [1] terminals of the EVAP purge control solenoid valve.

STANDARD: 30 – 34 Ω (20°C/68°F)

If the resistance is out specification, replace the EVAP purge control solenoid valve.

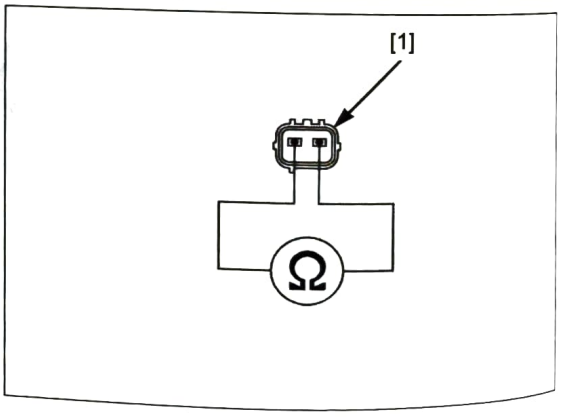

EVAP CANISTER

REMOVAL/INSTALLATION

Remove the following:

- EVAP purge control solenoid valve (page 7-18)
- two bolts [1]
- EVAP canister stay [2]

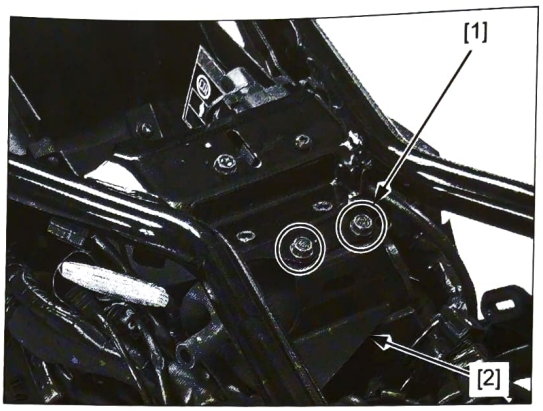

Disconnect the EVAP purge control solenoid valve drain hose [1] and fuel tank-to-EVAP canister hose [2].

Remove the EVAP canister [3] from the EVAP canister stay [4].

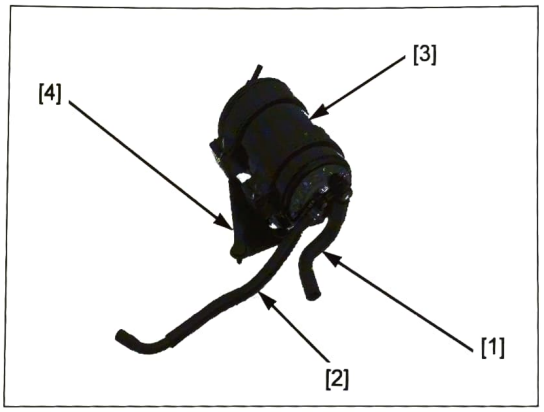

FUEL PUMP RELAY

CIRCUIT INSPECTION

For relay inspection (page 4-64).

Remove the following:

- left side cover (page 2-4)
- power box cover and fuel pump relay [1].

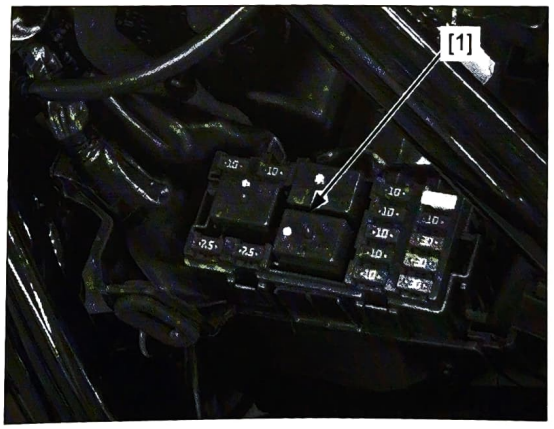

MEMO

8. COOLING SYSTEM

SERVICE INFORMATION 8-2

TROUBLESHOOTING 8-2

SYSTEM FLOW PATTERN 8-3

SYSTEM TESTING 8-4

COOLANT REPLACEMENT 8-5

THERMOSTAT 8-6

RADIATOR/COOLING FAN 8-7

RADIATOR RESERVE TANK 8-10

WATER PUMP 8-10

SERVICE INFORMATION

GENERAL

⚠ WARNING

Removing the radiator cap while the engine is hot can allow the coolant to spray out, seriously scalding you. Always let the engine and radiator cool down before removing the radiator cap.

NOTICE

Using coolant with silicate corrosion inhibitors may cause premature wear of water pump seals or blockage of radiator passages. Using tap water may cause engine damage.

- *The coolant should be inspected and replaced properly by following the maintenance schedule (page 3-3).*
- *DO NOT use non-ethylene glycol coolant, tap water, nor mineral water when adding or replacing the coolant. Use of improper coolant may cause damage, such as corrosion in the engine, blockage of the cooling passage or the radiator and premature wear of the water pump seal.*
- Add cooling system at the reserve tank. Do not remove the radiator cap except to refill or drain the system.
- All cooling system services can be done with the engine in the frame.
- Avoid spilling coolant on painted surfaces.
- After servicing the system, check for leaks with a cooling system tester.
- For high coolant temperature indicator (page 22-13).
- For fan control relay inspection (page 22-28).

TROUBLESHOOTING

Engine temperature too high

- Faulty high coolant temperature indicator or ECT sensor or ECM (page 22-13)
- Thermostat stuck closed
- Faulty radiator cap
- Insufficient coolant
- Passage blocked in radiator, hoses or water jacket
- Air in system
- Faulty cooling fan motor
- Faulty fan control relay (page 22-28)
- Faulty water pump

Engine temperature too low

- Faulty high coolant temperature indicator or ECT sensor or ECM (page 22-13)
- Thermostat stuck open
- Faulty fan control relay

Coolant leak

- Faulty water pump mechanical seal
- Deteriorated O-rings
- Faulty radiator cap
- Damaged or deteriorated cylinder head gasket
- Loose hose connection or clamp
- Damaged or deteriorated hose
- Damaged radiator

SYSTEM FLOW PATTERN

DCT type shown:

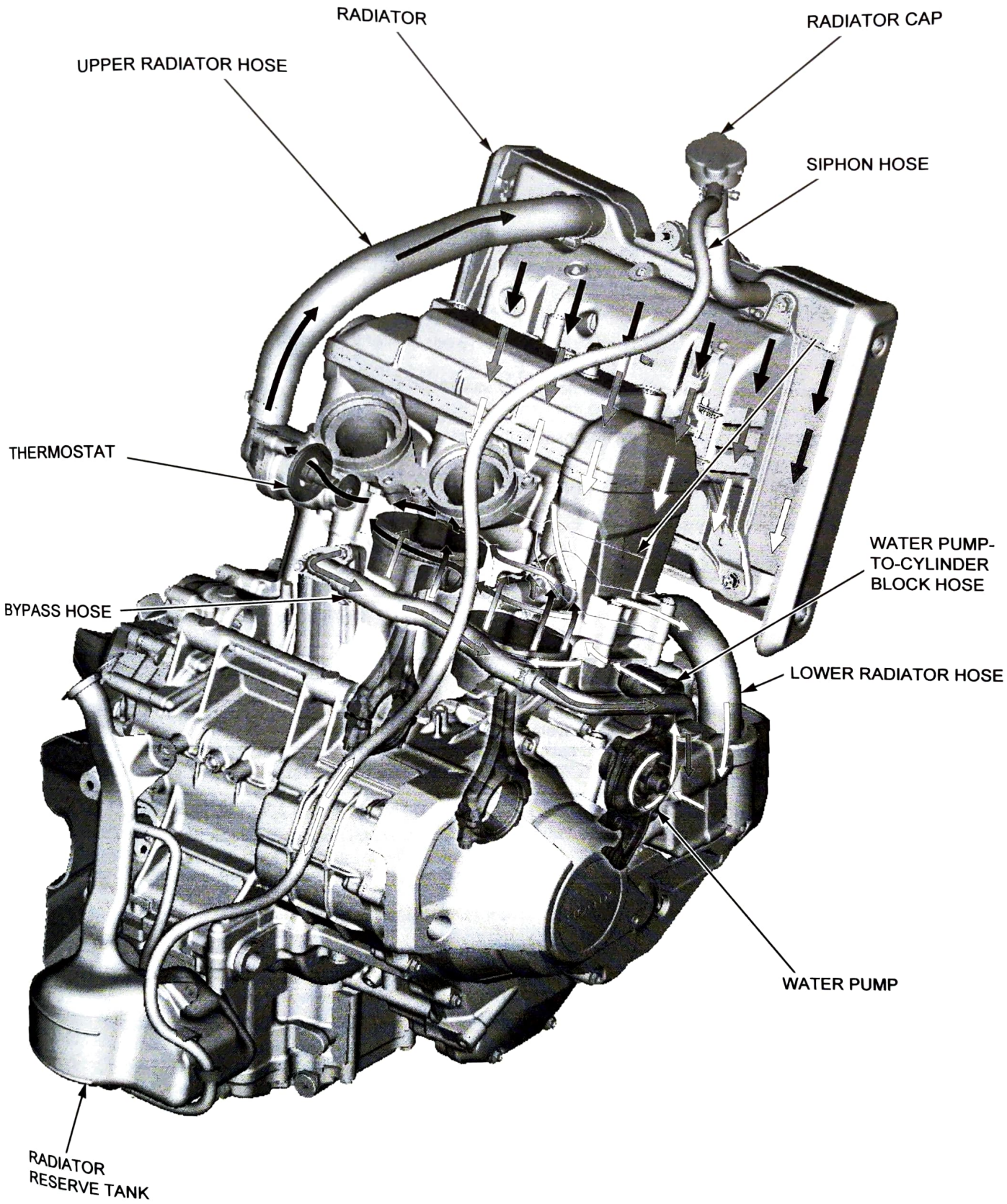

SYSTEM TESTING

RADIATOR CAP/SYSTEM PRESSURE INSPECTION

Remove the following:

- right front air cleaner cover (page 2-5)
- radiator cap [1]

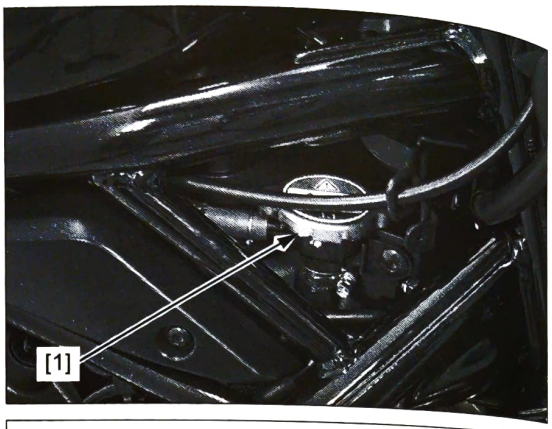

Wet the sealing surfaces of the cap [1], then install the cap onto the tester [2].

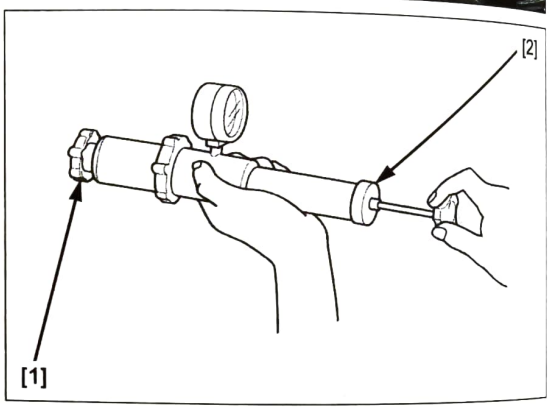

Pressurize the radiator cap using the tester.

Replace the radiator cap if it does not hold pressure, or if relief pressure is too high or too low.

The cap must hold the specified pressure for at least 6 seconds.

RADIATOR CAP RELIEF PRESSURE:
108 – 137 kPa (1.1 – 1.4 kgf/cm², 16 – 20 psi)

Connect the tester to the radiator.

Pressurize the radiator, engine and hoses using the tester, and check for leaks.

NOTICE

Excessive pressure can damage the cooling system components. Do not exceed 137 kPa (1.4 kgf/cm², 20 psi).

Repair or replace components if the system will not hold the specified pressure for at least 6 seconds.

COOLANT REPLACEMENT

REPLACEMENT/AIR BLEEDING

NOTE:

- When filling the system or reserve tank with coolant, or checking the coolant level, place the motorcycle in an upright position on a flat, level surface.

Remove the following:

- right front air cleaner cover (page 2-5)
- DCT type: clutch EOP sensor cover (page 2-10)
- MT type: left main step bracket (page 12-23)
- coolant drain bolt [1]
- sealing washer [2]

Remove the radiator cap [3] and drain the coolant.

Tighten the drain bolts to the specified torque.

TORQUE:
Coolant drain bolt:
13 N·m (1.3 kgf·m, 10 lbf·ft)

Remove the radiator reserve tank (page 8-10).

Empty the coolant and rinse the inside of the reserve tank with water.

Install the radiator reserve tank (page 8-10).

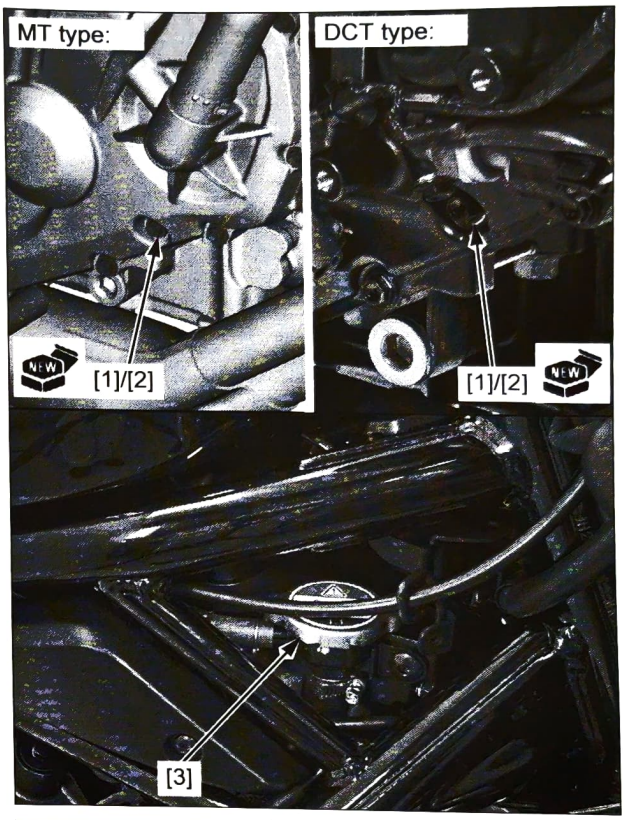

Fill the system with the recommended coolant through the filler opening up to filler neck [1].

RECOMMENDED ANTIFREEZE:
Pro Honda HP Coolant or an equivalent high quality ethylene glycol antifreeze containing corrosion protection inhibitors

STANDARD COOLANT CONCENTRATION:
1:1 mixture with distilled water

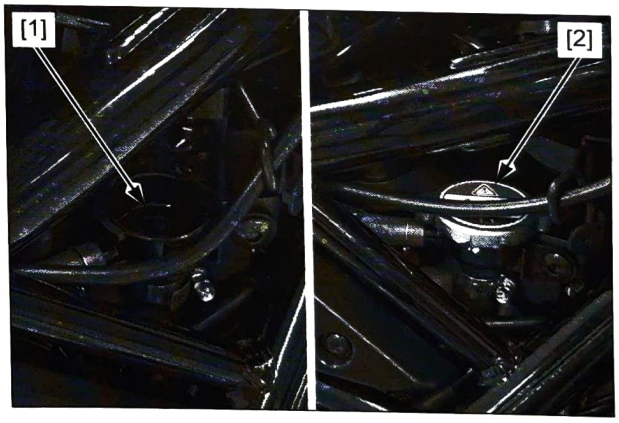

Bleed air from the system as follow:

1. Shift the transmission into neutral.
   Start the engine and let it idle for 2 – 3 minutes.
2. Snap the throttle 3 – 4 times to bleed air from the system.
3. Stop the engine and add coolant up to the filler neck if necessary.
4. Install the radiator cap [2].
5. Check the level of coolant in the reserve tank and fill to the upper level line if it is low (page 3-15).

NOTE:

- When air bleeding is insufficient, level of coolant in the reserve tank will decrease. If so, fill to the upper level line with coolant.

Check that there are no coolant leaks.

Install the following:

- MT type: left main step bracket (page 12-23)
- DCT type: clutch EOP sensor cover (page 2-10)
- right front air cleaner cover (page 2-5)

THERMOSTAT

REMOVAL/INSTALLATION

Drain the coolant (page 8-5).

Remove the socket bolts [1] and thermostat cover [2].

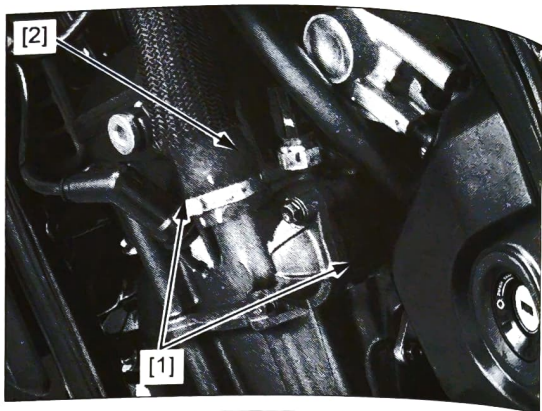

Remove the thermostat [1] from the cylinder head.

Installation is in the reverse order of removal.

TORQUE:
Thermostat cover socket bolt:
12 N·m (1.2 kgf·m, 9 lbf·ft)

NOTE:
- Install the thermostat with the air bleed hole [2] facing up.

Fill and bleed the cooling system (page 8-5).

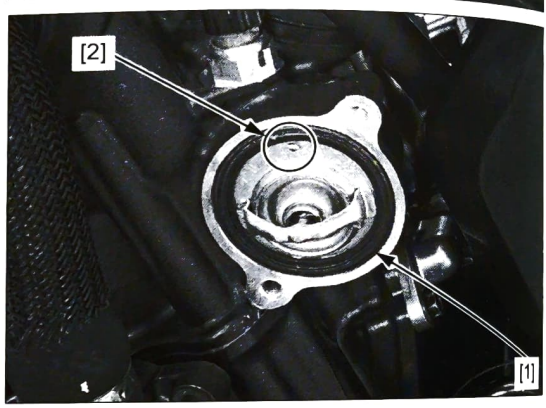

INSPECTION

Visually inspect the thermostat [1] for damage.

Replace the thermostat if the valve stays open at room temperature.

Check the seal ring [2] for damage and replace if necessary.

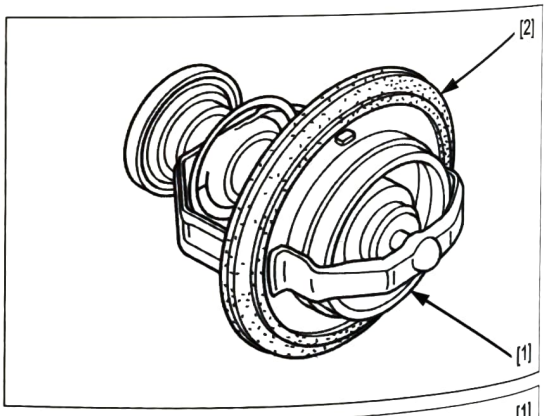

Wear insulated gloves and adequate eye protection. Keep flammable materials away from the electric heating element. Do not let the thermostat or thermometer [1] touch the pan, or you will get a false reading.

Heat the water with an electric heating element to operating temperature for 5 minutes.

Suspend the thermostat [2] in heated water to check its operation.

THERMOSTAT BEGIN TO OPEN:
80 – 84°C (176 – 183°F)

VALVE LIFT:
8 mm (0.3 in) minimum at 95°C (203°F)

Replace the thermostat if it responds at temperatures other than those specified.

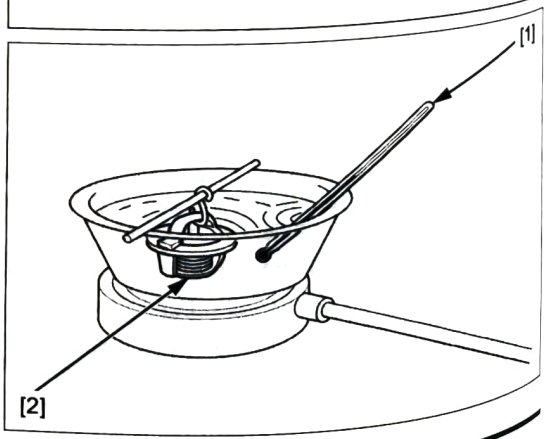

RADIATOR/COOLING FAN

REMOVAL/INSTALLATION

Drain the coolant (page 8-5).

Loosen the band screw [1].

Disconnect the following:

- siphon hose [2]
- filer neck hose [3]

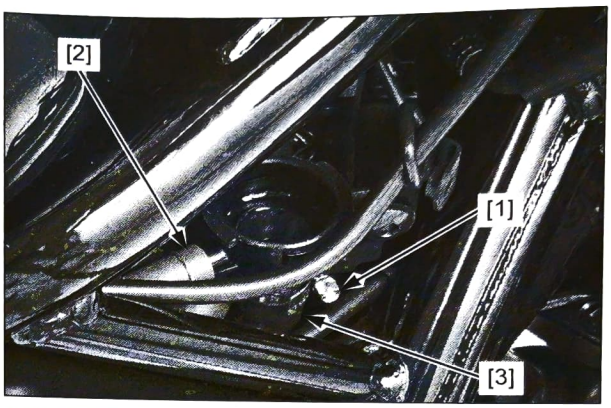

Remove the following:

- two radiator mounting bolts (lower side) [1]
- two bolts [2]
- stay [3]

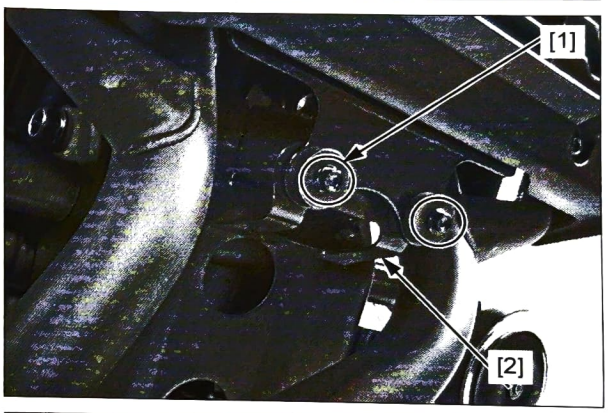

Loosen the hose band [1] and disconnect lower radiator hose [2].

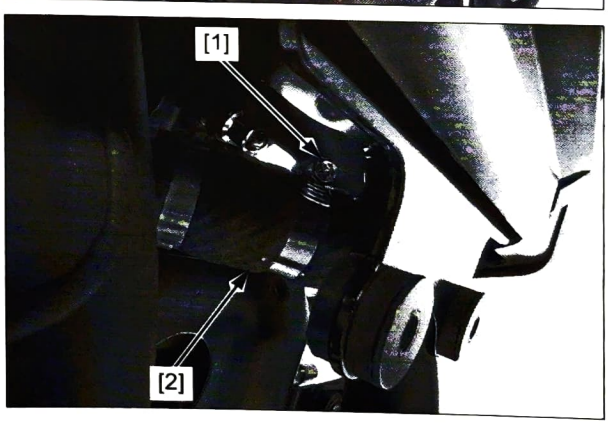

Be careful not to damage the radiator fins.

Remove the socket bolt [1].

Release the band clip [2].

Remove the bolt [3].

Slide the radiator forward.

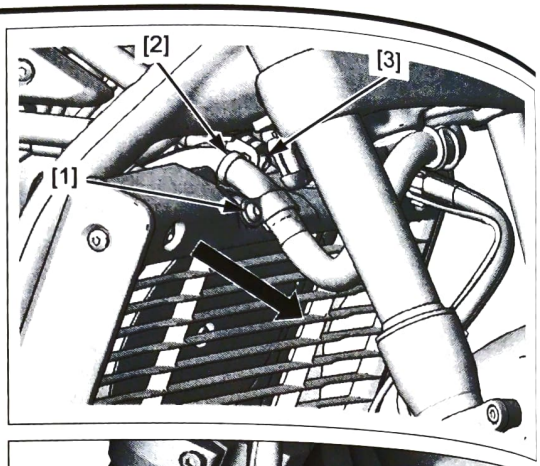

Disconnect the upper radiator [1].

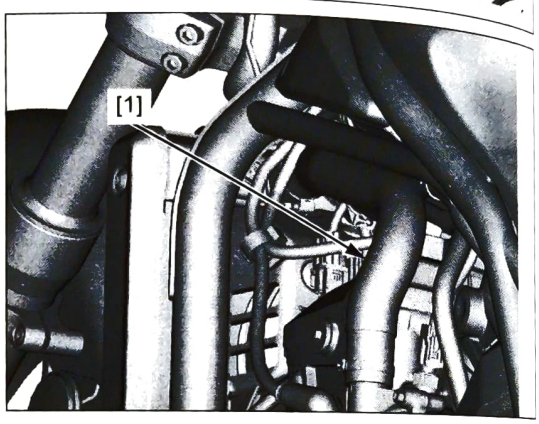

Release the wire harnesses from the clamps [1] and the guides [2].

Disconnect the following connector:

- fan motor 2P (Black) [3]
- left A/F sensor 4P (Black) [4]
- front wheel speed sensor 2P (Black) [5]
- right A/F sensor 4P (Black) [6]
- liner solenoid 4P (Black) [7]

Remove the radiator [8].

Installation is in the reverse order of removal.

NOTE:

- Route the wires and hoses properly (page 1-27).

Fill and bleed the cooling system (page 8-5).

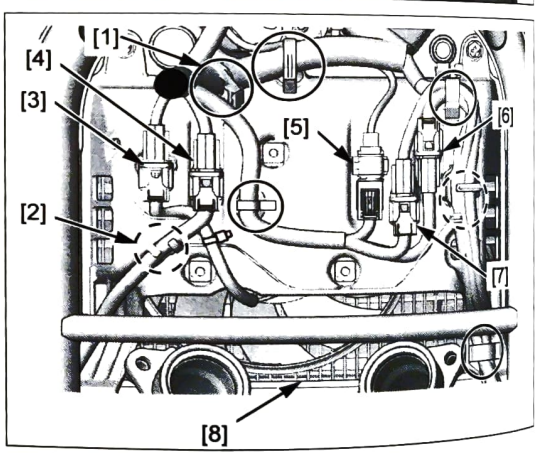

DISASSEMBLY/ASSEMBLY

Disassemble and assemble the radiator as shown in the following illustration.

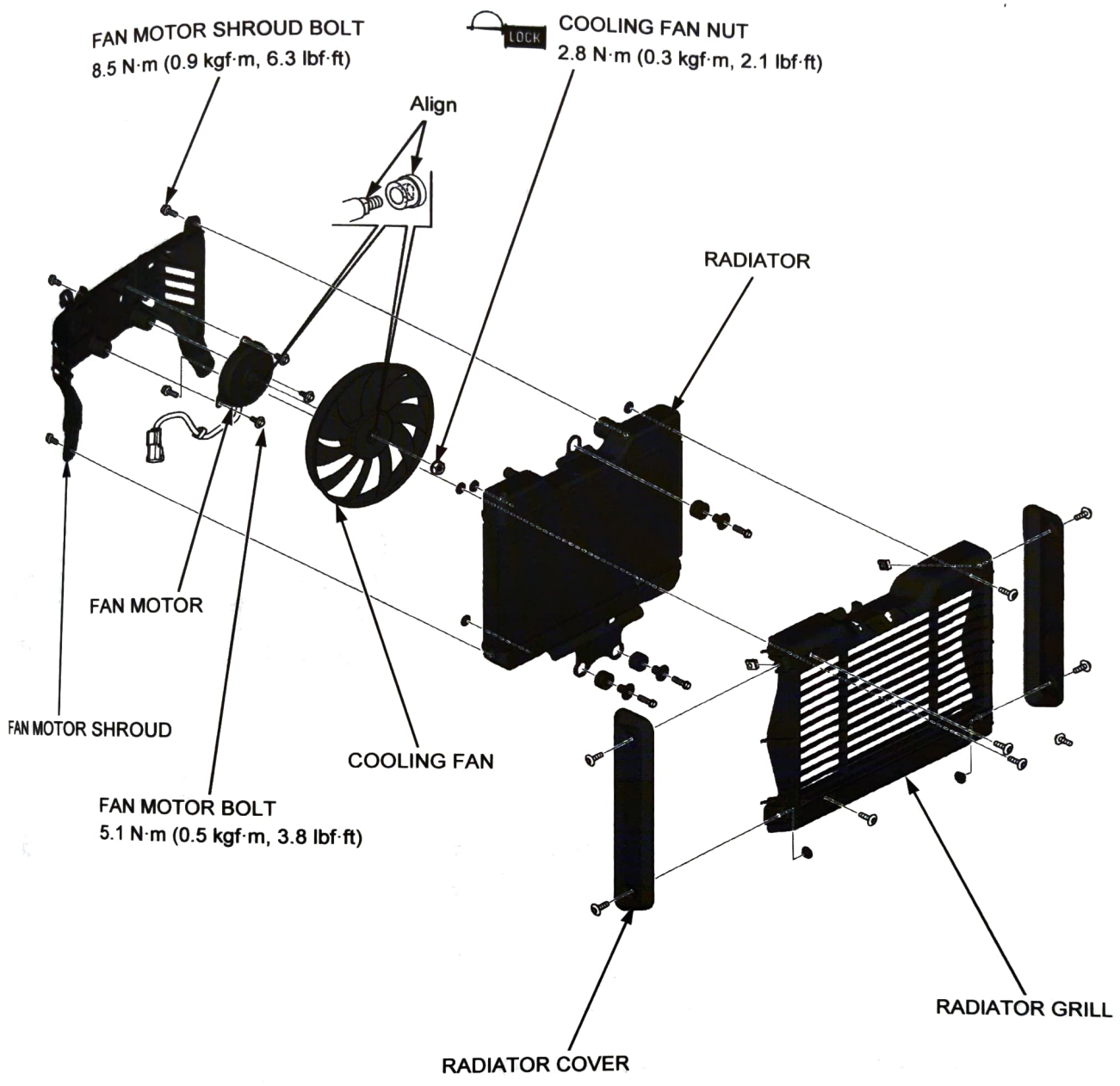

RADIATOR RESERVE TANK

REMOVAL/INSTALLATION

Remove the following:

- battery case (page 2-12)
- socket bolt [1]
- clip [2]

Disconnect the overflow hose [3] from the reserve tank.

Disconnect the siphon hose [4] and release it from the guide [5].

Release the two bosses [6] of the reserve tank [7] from the frame.

Drain the coolant to remove the radiator reserve tank.

Installation is in the reverse order of removal.

- Install the reserve tank by aligning the bosses of the reserve tank with the holes [8] of the frame.

Fill the reserve tank with the recommended coolant (page 3-15).

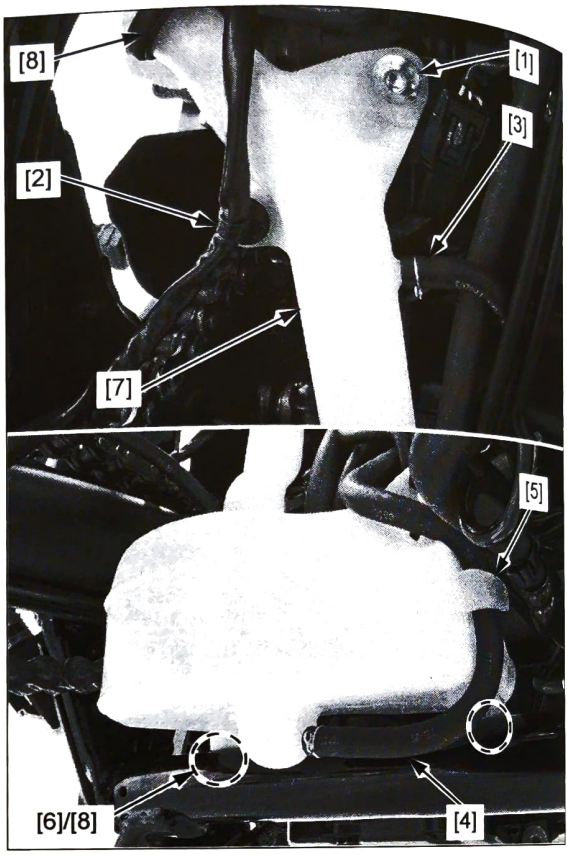

WATER PUMP

MECHANICAL SEAL INSPECTION

Check the water pump bleed pipe [1] for signs of coolant leakage.

NOTE:

- A small amount of coolant weeping from the bleed pipe is normal.
- Make sure that there is no continuous coolant leakage from the bleed pipe while operating the engine.

Replace the water pump as an assembly if necessary.

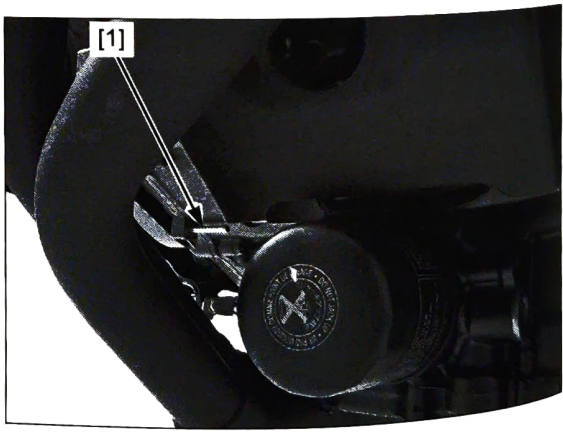

REMOVAL

Remove the right crankcase cover:

- MT type: page 12-5
- DCT type: page 13-38

Remove the coolant drain bolt [1] and sealing washer [2].

Remove the water pump cover bolts [3] and water pump body [4].

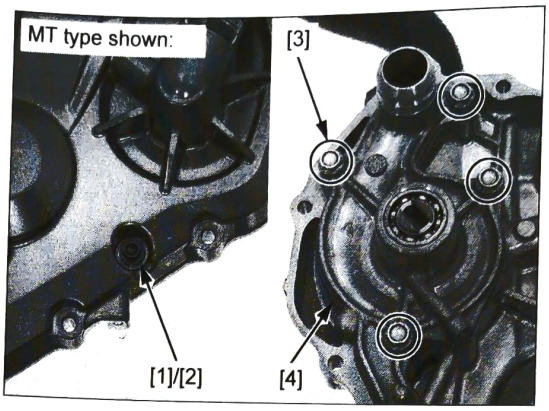

INSTALLATION

Install a new O-ring [1] into the groove in the water pump body [2].

Install the dowel pins [3] and water pump body.

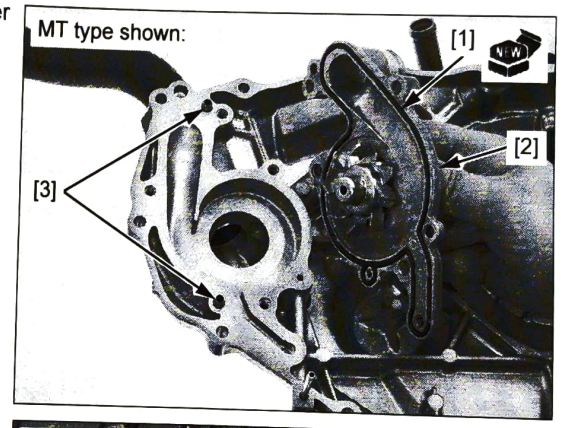

Apply locking agent to the water pump cover bolts threads (page 1-21).

Install and tighten the water pump cover bolts [1] to the specified torque.

TORQUE: 13 N·m (1.3 kgf·m, 10 lbf·ft)

Install the coolant drain bolt [2] and a new sealing washer [3].
Tighten the coolant drain bolt to the specified torque.

TORQUE: 13 N·m (1.3 kgf·m, 10 lbf·ft)

Install the right crankcase cover:

- MT type: (page 12-5)
- DCT type: (page 13-38)

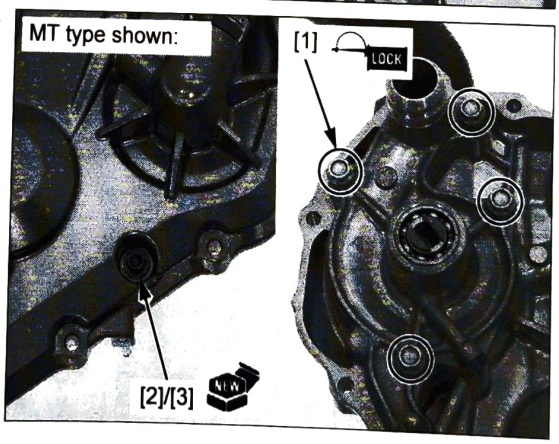

MEMO

9. LUBRICATION SYSTEM

SERVICE INFORMATION 9-2

TROUBLESHOOTING 9-3

LUBRICATION SYSTEM DIAGRAM 9-4

OIL PRESSURE INSPECTION 9-6

OIL PUMP 9-6

OIL PUMP DRIVEN GEAR 9-9

OIL STRAINER 9-10

SERVICE INFORMATION

GENERAL

⚠CAUTION

Used engine oil may cause skin cancer if repeatedly left in contact with the skin for prolonged periods. Although this is unlikely unless you handle used oil on a daily basis, it is still advisable to thoroughly wash your hands with soap and water as soon as possible after handling used oil.

- The oil pump can be serviced with the engine installed in the frame.
- The service procedures in this section must be performed with the engine oil drained.
- When removing and installing the oil pump, use care not to allow dust or dirt to enter the engine.
- If any portion of the oil pump is worn beyond the specified service limits, replace the oil pump as an assembly.
- After the oil pump has been installed, check that there are no oil leaks and that oil pressure is correct.
- For engine oil pressure indicator/EOP switch inspection (page 22-14).
- For piston oil jet service (page 15-14).

TOOLS

Oil pressure gauge attachment 070MJ-0010101 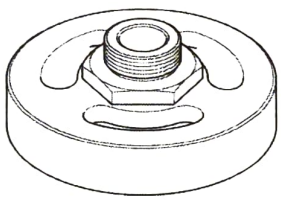 or 07AMJ-001A100 and 07APJ-004A160 fitting (U.S.A. only)	Oil filter wrench 07HAA-PJ70101 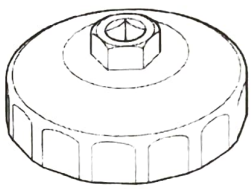 or 07AAA-PLCA100 (U.S.A. only)	Oil pressure gauge set 07506-3000001 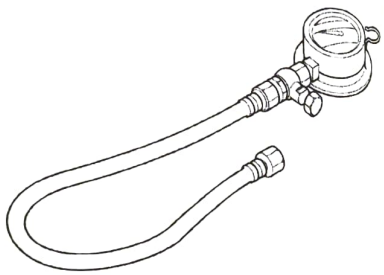 or equivalent commercially available
Oil pressure gauge attachment 07406-0030000 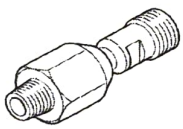 or equivalent commercially available	Bearing remover shaft set, 12 mm 07936-1660101 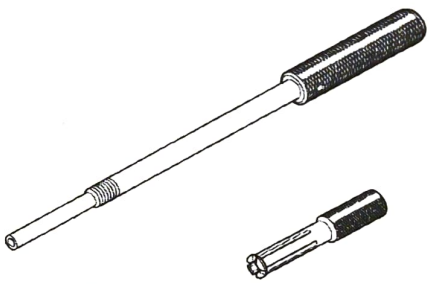 or 07936-166010A (U.S.A. only)	Remover weight 07741-0010201 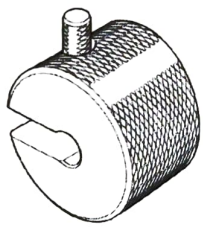 or 07936-371020A (U.S.A. only) or commercially available 3/8" x 16 slide hammer (U.S.A. only)
Remover handle 07936-3710100 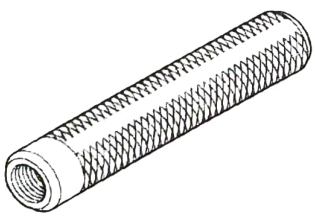	Pilot, 16 mm 07746-0041300 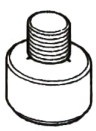	Driver 07749-0010000 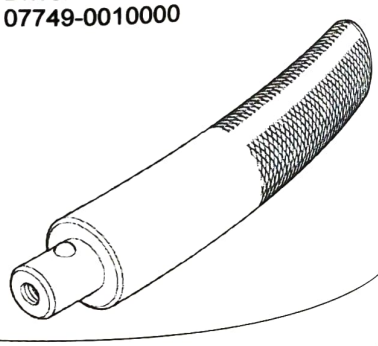

Pilot, 17 mm
07746-0040400



TROUBLESHOOTING

Oil level too low
- Oil consumption
- External oil leak
- Worn piston rings (page 15-13)
- Improperly installed piston rings (page 15-13)
- Worn cylinders (page 15-12)
- Worn stem seals (page 10-17)
- Worn valve guide (page 10-17)

Low oil pressure
- Oil level low
- Clogged oil strainer
- Internal oil leak
- Incorrect oil being used

No oil pressure
- Oil level too low
- Oil pressure relief valve stuck open
- Broken oil pump drive chain
- Broken oil pump drive or driven sprocket
- Damaged oil pump
- Internal oil leak

High oil pressure
- Oil pressure relief valve stuck closed
- Clogged oil filter, gallery or metering orifice
- Incorrect oil being used

Oil contamination
- Oil or filter not changed often enough
- Worn piston rings

Oil emulsification
- Blown cylinder head gasket
- Leaky coolant passage
- Entry of water

LUBRICATION SYSTEM DIAGRAM

MT type:

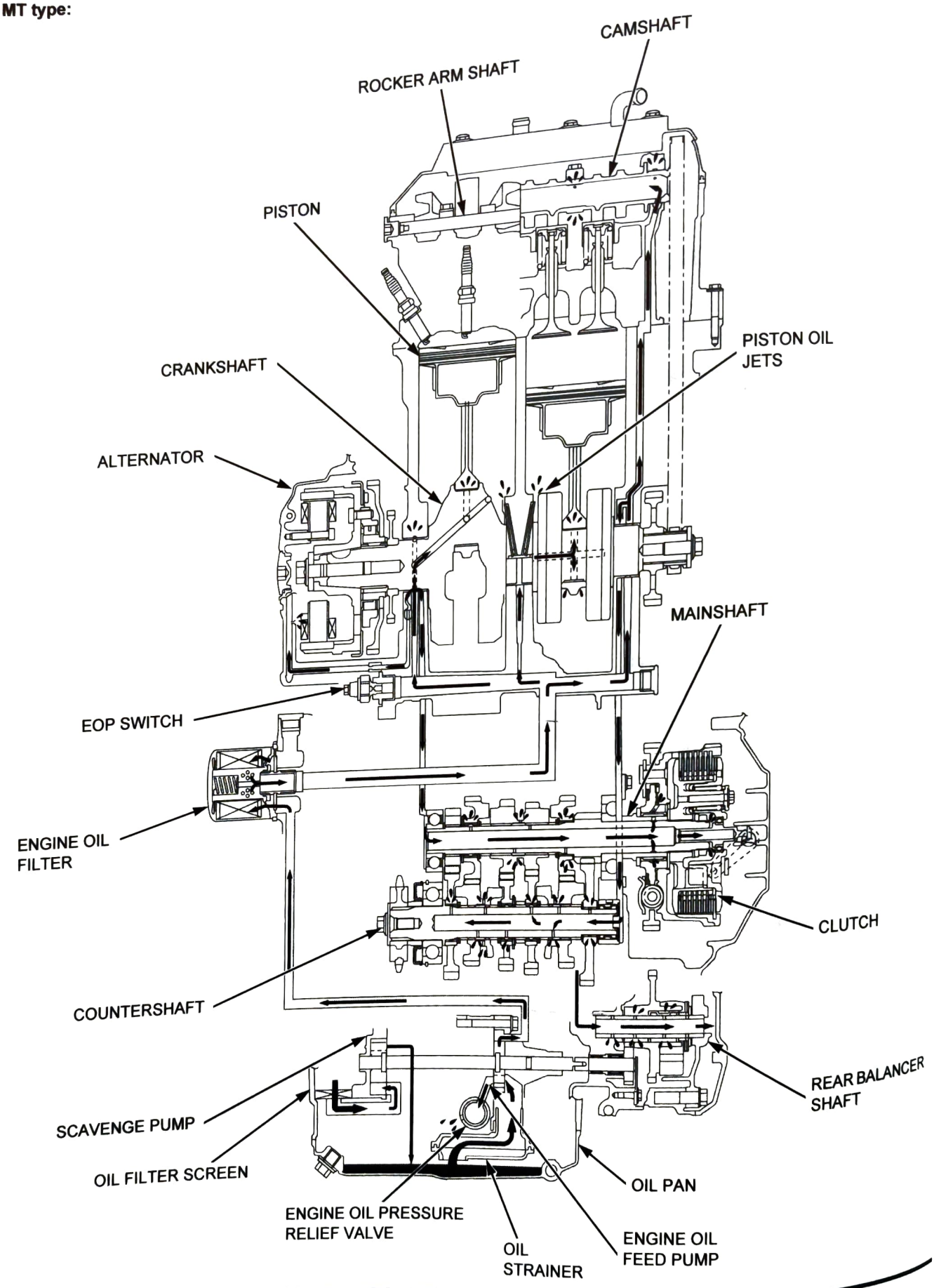

DCT type:

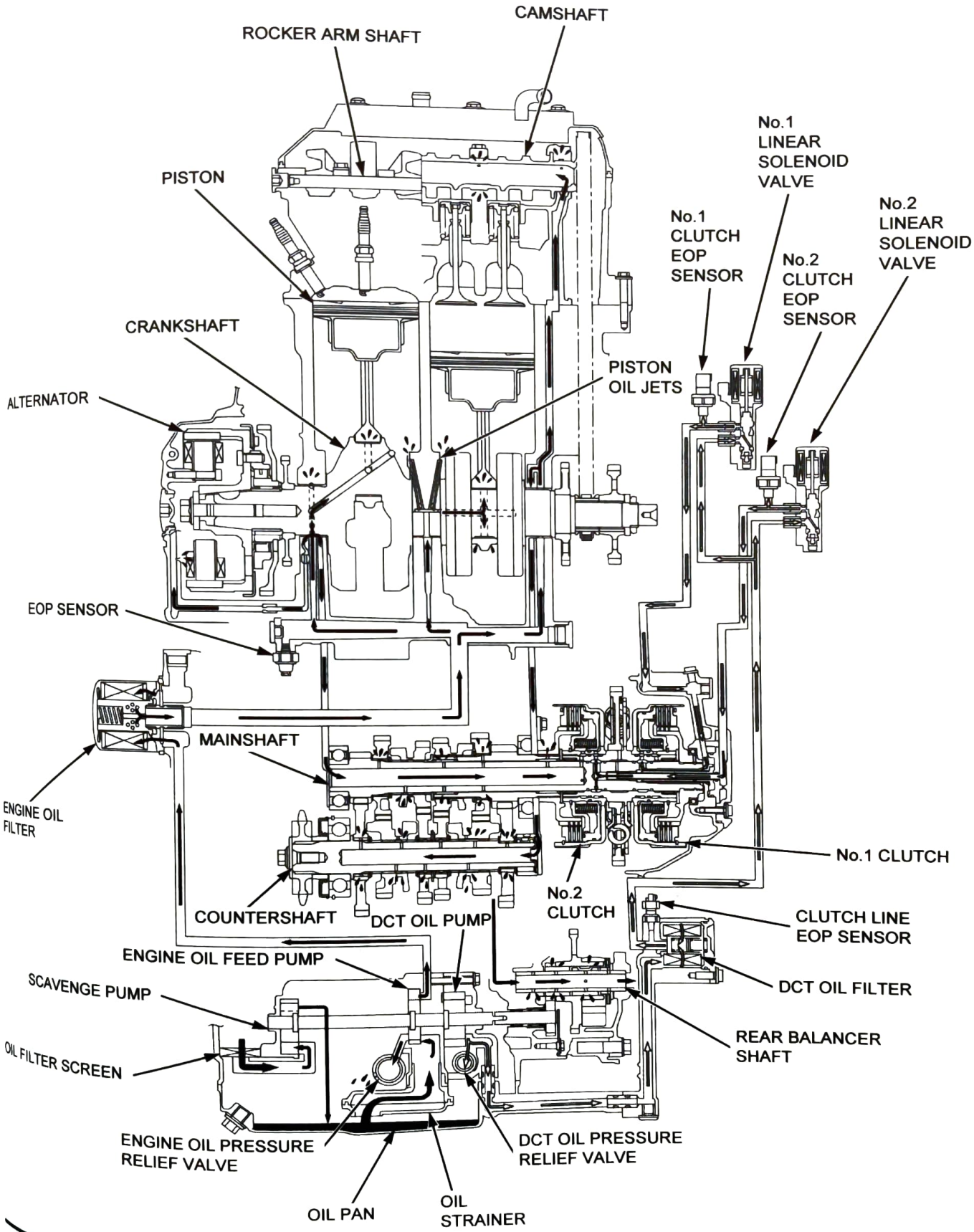
CAMSHAFT
ROCKER ARM SHAFT
No.1
LINEAR
SOLENOID
VALVE
PISTON
No.1
CLUTCH
EOP
SENSOR
No.2
LINEAR
SOLENOID
VALVE
No.2
CLUTCH
EOP
SENSOR
CRANKSHAFT
PISTON
OIL JETS
ALTERNATOR
EOP SENSOR
MAINSHAFT
ENGINE OIL
FILTER
No.1 CLUTCH
No.2
CLUTCH
COUNTERSHAFT
DCT OIL PUMP
CLUTCH LINE
EOP SENSOR
ENGINE OIL FEED PUMP
DCT OIL FILTER
SCAVENGE PUMP
REAR BALANCER
SHAFT
OIL FILTER SCREEN
ENGINE OIL PRESSURE
RELIEF VALVE
DCT OIL PRESSURE
RELIEF VALVE
OIL PAN
OIL
STRAINER

OIL PRESSURE INSPECTION

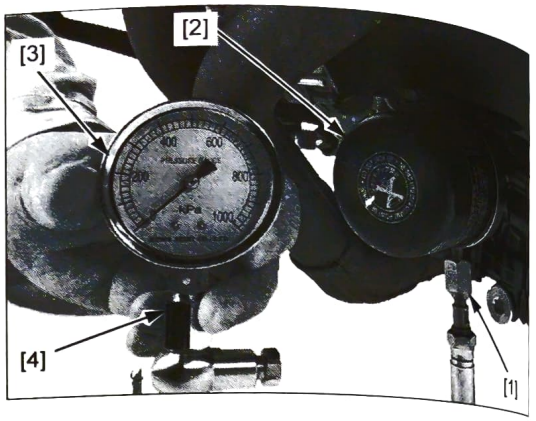

Remove the engine oil filter cartridge (page 3-13).

Apply engine oil to the O-ring and install the oil pressure attachment [1] onto the oil filter boss.

TOOL:
Oil pressure gauge attachment 070MJ-0010101

Apply engine oil to the O-ring and engine oil filter cartridge threads.

Install the engine oil filter cartridge [2] onto the oil pressure attachment.

TOOL:
Oil filter wrench 07HAA-PJ70101

TORQUE: 26 N·m (2.7 kgf·m, 19 lbf·ft)

Connect the oil pressure gauge [3] and attachment [4] to the oil pressure gauge attachment.

TOOLS:
Oil pressure gauge set 07506-3000001 or equivalent commercially available
Oil pressure gauge attachment 07406-0030000 or equivalent commercially available

Fill the engine with the recommended engine oil (page 3-12).

Warm the engine to normal operating temperature (approximately 80°C/176°F) and increase the engine speed to 5,000 rpm and read the oil pressure.

STANDARD:
614 kPa (6.3 kgf/cm², 89 psi) at 5,000 rpm (80°C/176°F)

Stop the engine and remove the tools.

Install the engine oil filter cartridge (page 3-13).

OIL PUMP

REMOVAL/INSTALLATION

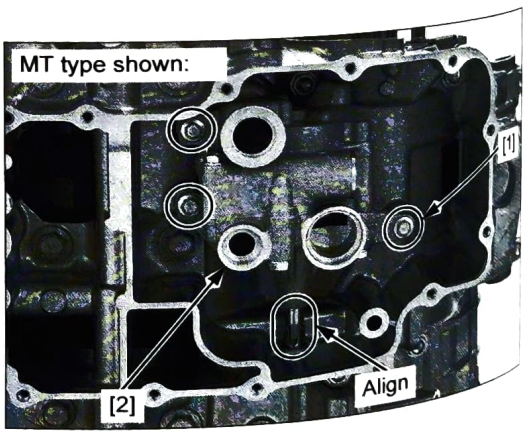

Remove the oil strainer (page 9-10).

Remove the oil pump mounting bolts [1] and oil pump [2].

Installation is in the reverse order of removal.

TORQUE:
Oil pump mounting bolt:
16 N·m (1.6 kgf·m, 12 lbf·ft)

NOTE:
- Align the oil pump driven shaft end with the oil pump drive shaft groove.

DISASSEMBLY/ASSEMBLY

NOTE:
- Dip all parts in clean engine oil.

MT type

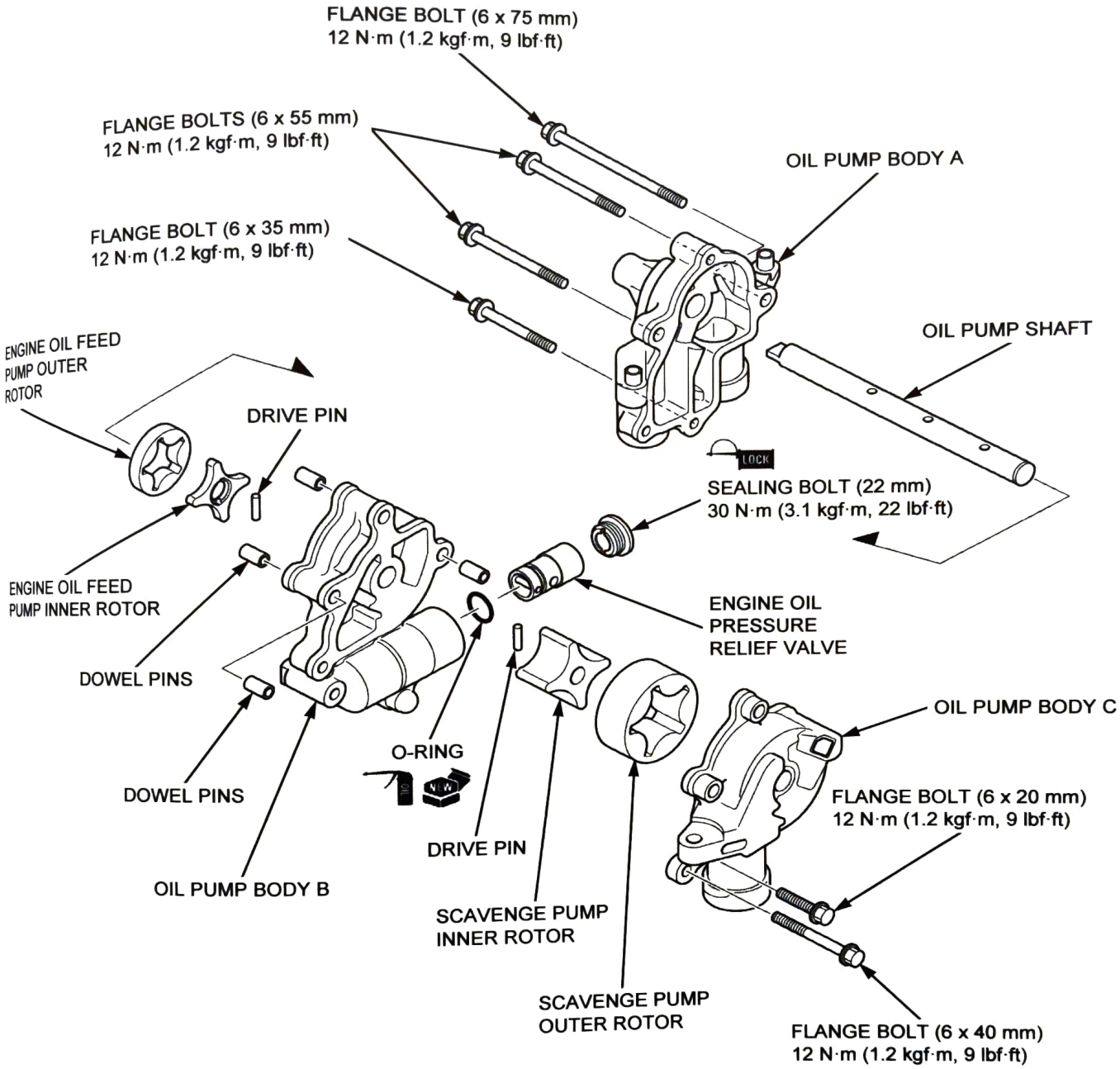

DCT type

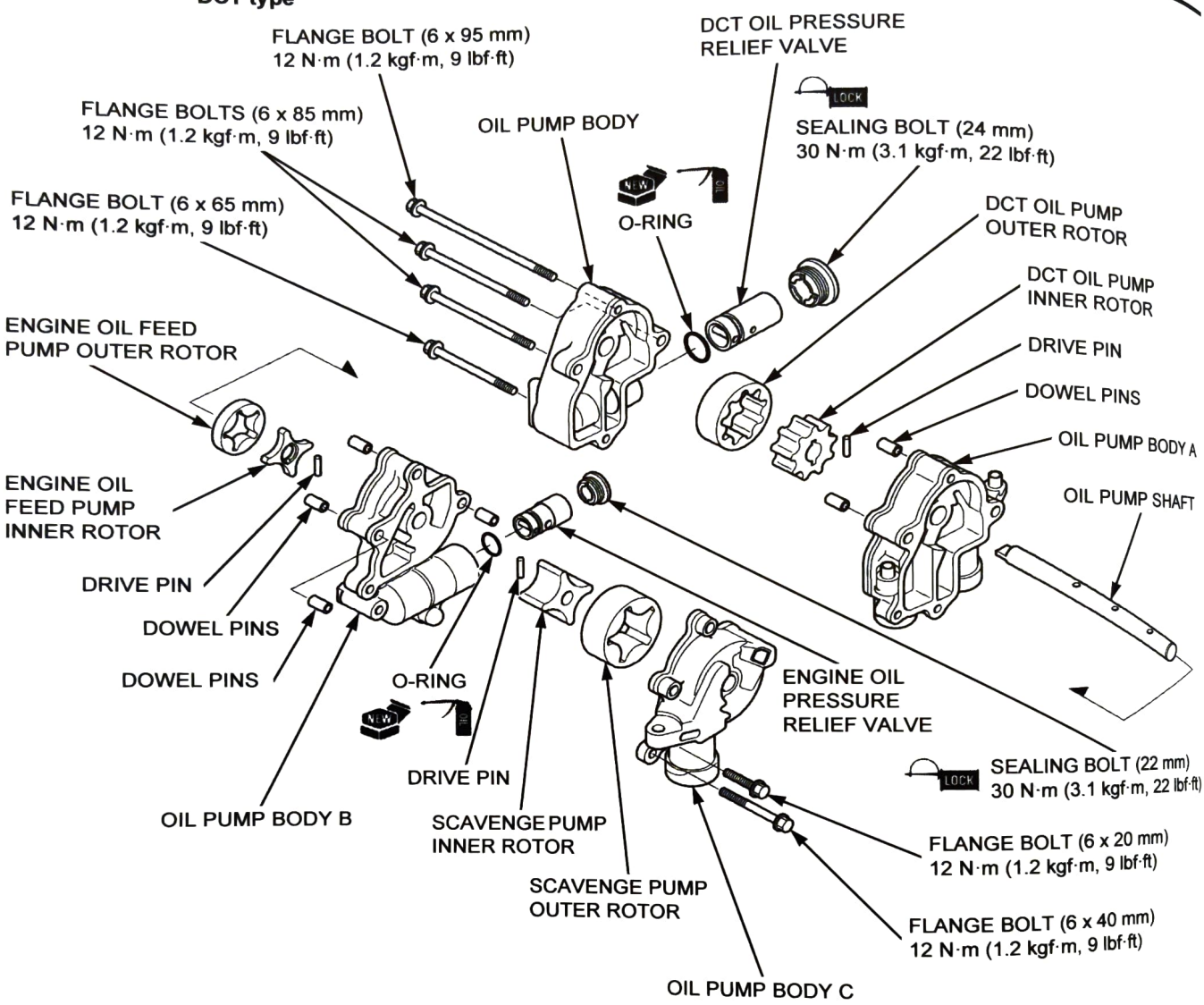

INSPECTION

OIL PUMP

Inspection the following parts for damage, abnormal wear, deformation, or burning:

- Oil pump shaft
- Drive pin
- Inner rotor
- Outer rotor
- Oil pump body

Measure the oil pump clearances according to LUBRICATION SYSTEM SPECIFICATIONS (page 1-6).

If any of the measurement is out of the service limit, replace the oil pump as an assembly.

PRESSURE RELIEF VALVE

Remove the pressure relief valve (page 9-6).

Check the operation of the valve by pushing on the piston [1].

- Engine oil pressure relief valve [2]
- DCT oil pressure relief valve (DCT type) [3]

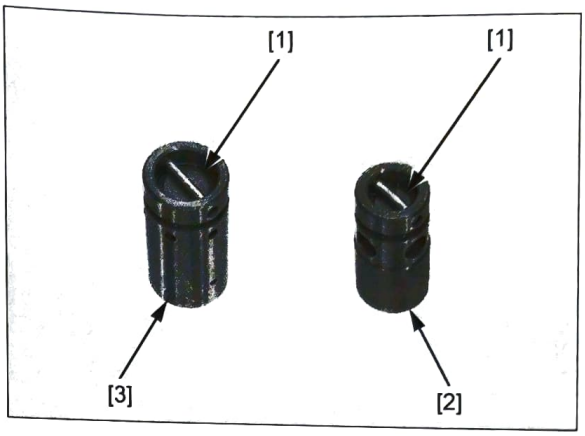

OIL PUMP DRIVEN GEAR

REMOVAL

Remove the rear balancer (page 14-7).

Remove the following:

- Oil pump driven gear set plate bolt [1]
- Set plate [2]
- Oil pump driven gear [3]
- Washer [4]

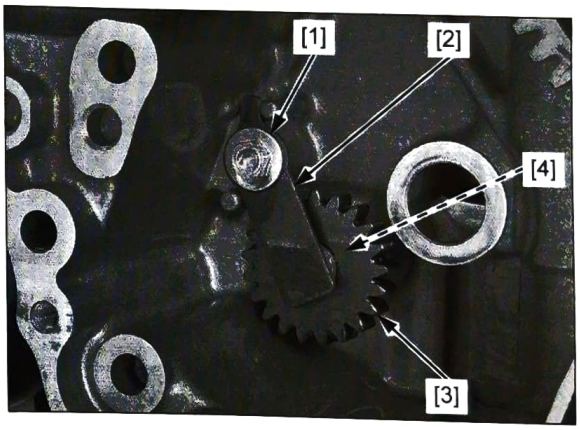

INSTALLATION

Apply molybdenum oil solution to the oil pump driven gear bearing roller surfaces.

Apply molybdenum oil solution to the oil pump driven gear shaft outer surface.

Install the washer [1] to the oil pump driven gear [2].

Install the oil pump driven gear to the crankcase.

NOTE:

- Align the oil pump driven gear shaft groove with the oil pump shaft end.

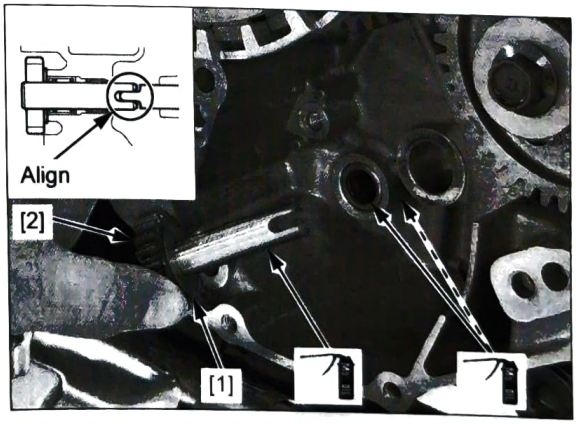

Apply locking agent to the oil pump driven gear set plate bolt threads.

Install the set plate [1] and oil pump driven gear set plate bolt [2].

Tighten the oil pump driven gear set plate bolt to the specified torque.

TORQUE: 12 N·m (1.2 kgf·m, 9 lbf·ft)

Install the rear balancer (page 14-7).

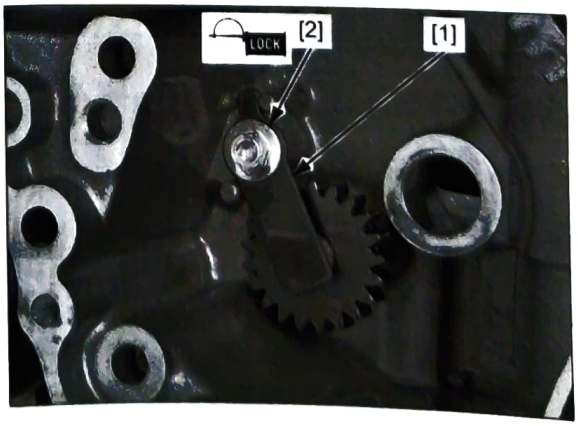

BEARING REPLACEMENT

Remove the oil pump driven gear (page 9-9).

Remove the needle bearing (12 x 18 x 14 mm) [1] using these special tools:

TOOLS:

Bearing remover shaft set, 12 mm	**07936-1660101**
Remover weight	**07741-0010201**
Remover handle	**07936-3710100**

Remove the needle bearing (12 x 16 x 10 mm) [2] using the same special tools.

Apply engine oil to new needle bearing rolling areas and contact surfaces.

Drive in the needle bearing (12 x 16 x 10 mm) using the below special tools until it is in position as shown.

TOOLS:

Pilot, 16 mm	**07746-0041300**
Driver	**07749-0010000**

NOTE:

- Drive in a new needle bearing with its marked side facing out.

Drive in the needle bearing (12 x 18 x 14 mm) using the below special tools until it is in position as shown.

TOOLS:

Pilot, 17 mm	**07746-0040400**
Driver	**07749-0010000**

NOTE:

- Drive in a new needle bearing with its seal side facing out.

Install the oil pump driven gear (page 9-9).

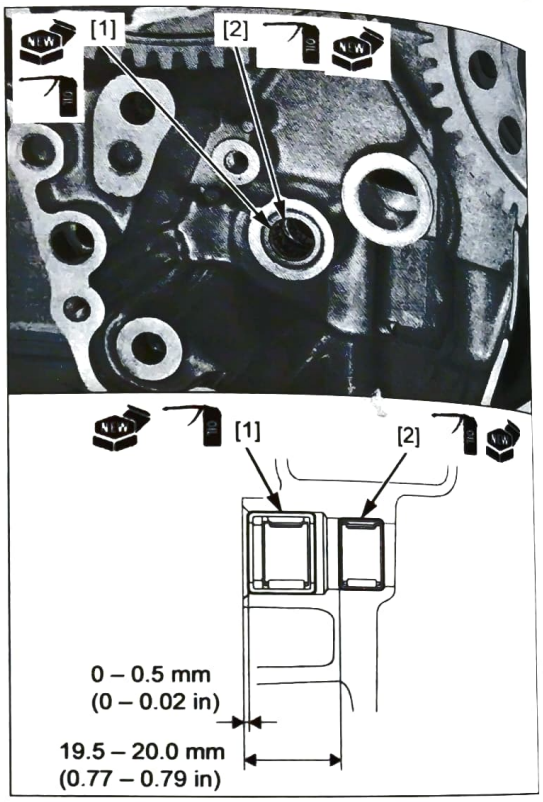

OIL STRAINER

REMOVAL

Drain the engine oil (page 3-12).

Loosen the bolts [1] in a crisscross pattern in 2 or 3 steps.

Remove the bolts and oil pan [2].

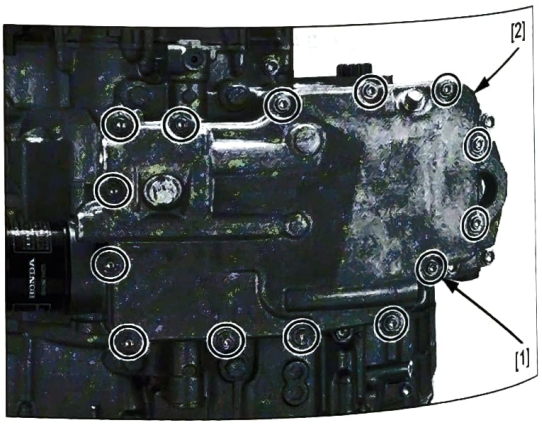

Remove the oil strainer [1] and seal ring [2].

Clean the oil strainer and check for damage, replace it if necessary.

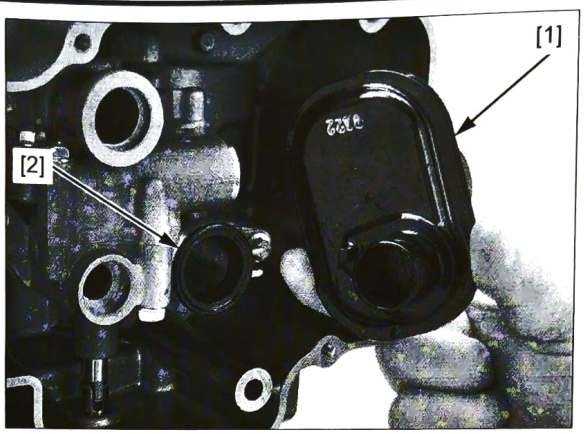

Remove the gasket [1] and O-rings [2] from the oil pan.

DCT type: Remove the oil joints [3] from the oil pan.
Remove the O-rings [4] and back up rings [5] from the oil joints.

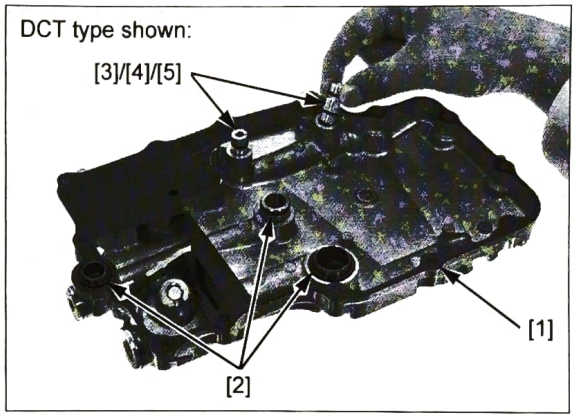

Remove the oil filter screen [1] from the oil pan.

Clean the oil filter screen and check for damage, replace it if necessary.

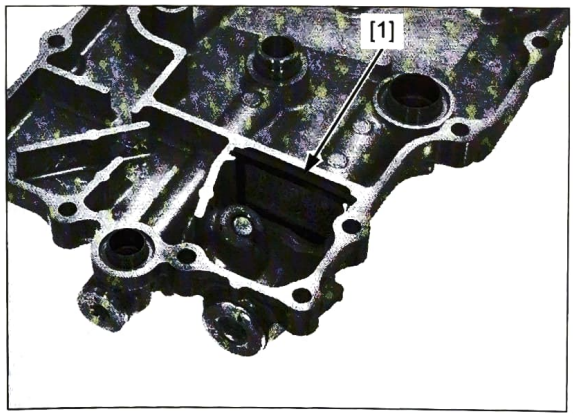

INSTALLATION

Install the oil filter screen [1] into the oil pan in the direction as shown.

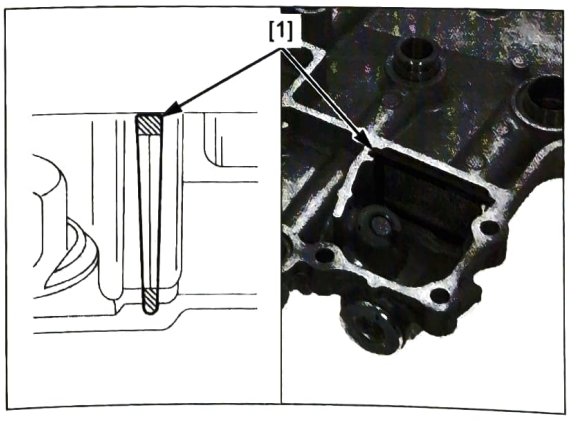

Apply engine oil to new O-rings.
Install the new gasket [1] and O-rings [2] to the oil pan.

DCT type: Apply engine oil to new O-rings.
Install the new back up rings [3] and O-rings [4] to the oil joints [5].
Install the oil joints to the oil pan.

NOTE:

- Install the back up rings and O-rings to the oil joints as shown.

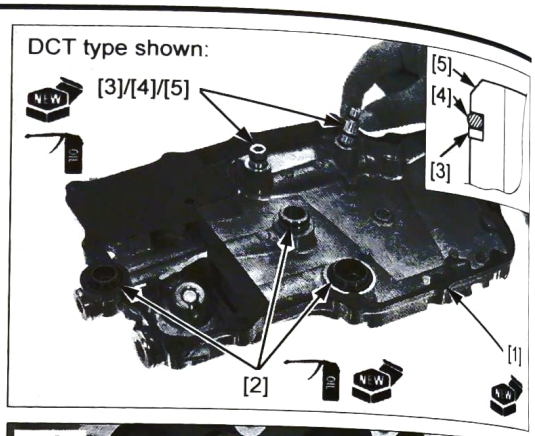

Apply engine oil to a new seal ring.

Install the seal ring [1] to the oil pump.

Install the oil strainer [2].

NOTE:

- Align the oil strainer boss with the oil pump groove.

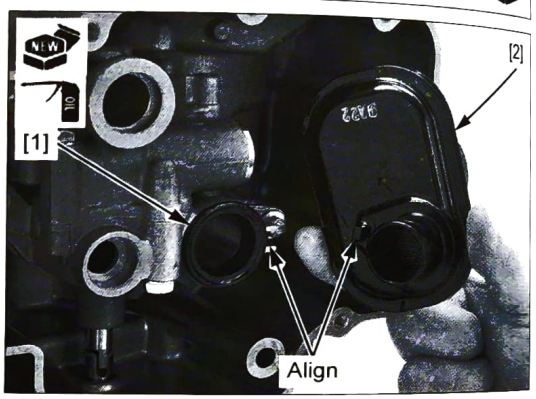

Install the oil pan [1].

Install and tighten the bolts [2] in a crisscross pattern in 2 or 3 steps.

Fill the engine with the recommended engine oil and check that there are no oil leaks (page 3-13).

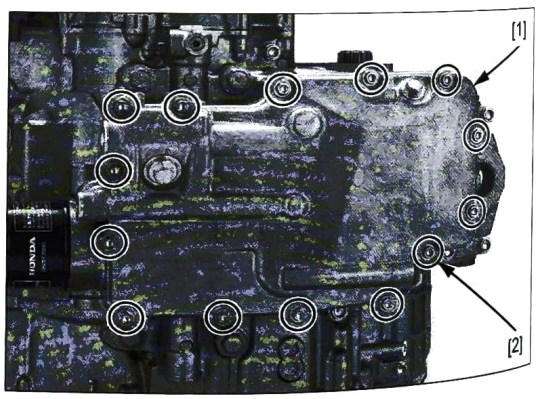

10. CYLINDER HEAD/VALVE/CAMSHAFT

SERVICE INFORMATION 10-2

TROUBLESHOOTING 10-3

COMPONENT LOCATION 10-4

CYLINDER COMPRESSION 10-5

CYLINDER HEAD COVER 10-5

ROCKER ARM 10-7

CAM CHAIN TENSIONER LIFTER 10-10

CAMSHAFT 10-11

CYLINDER HEAD/
CAM CHAIN TENSIONER 10-17

INSULATOR 10-25

SERVICE INFORMATION

GENERAL

- This section covers service of the cylinder head, valves, rocker arms, and camshaft. These services can be done with the engine installed in the frame.
- When disassembling, mark and store the disassembled parts to ensure that they are reinstalled in their original locations.
- Clean all disassembled parts with cleaning solvent and dry them by blowing them off with compressed air before inspection.
- Rocker arm, valve and camshaft lubricating oil is fed through oil passage in the cylinder head. Clean the oil passage before assembling the cylinder head.
- Be careful not to damage the mating surfaces when removing the cylinder head cover and cylinder head.

TOOLS

Tensioner holder B 070MG-0010100 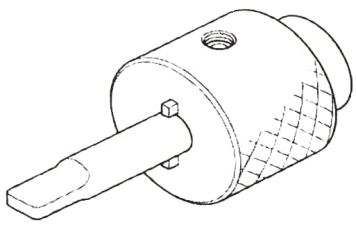 or 07AMG-001A100 (U.S.A. only) or 07AMG-MFJA100 (U.S.A. only)	Valve spring compressor 07757-0010000 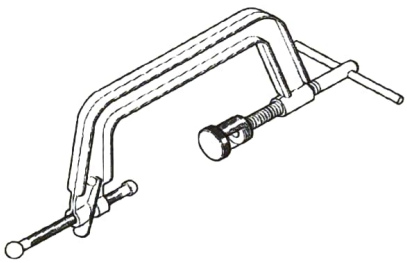	Valve guide driver, 5.5 mm 07742-0010100 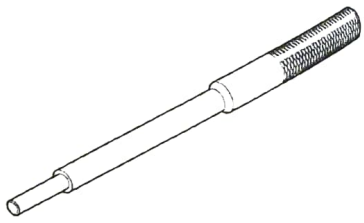
Valve guide reamer, 5.5 mm 07984-2000001 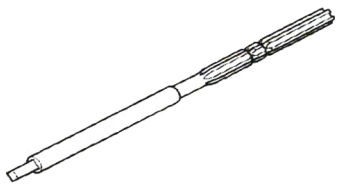 or 07984-200000D (U.S.A. only)	Cutter holder, 5.5 mm 07781-0010101 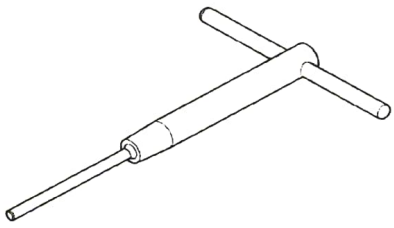 or equivalent commercially available in U.S.A.	Seat cutter, 40 mm (45° IN) 07780-0010500 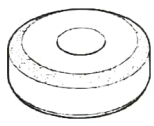 or equivalent commercially available in U.S.A.
Seat cutter, 35 mm (45° EX) 07780-0010400 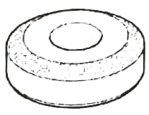 or equivalent commercially available in U.S.A.	Flat cutter, 38.5 mm (32° IN) 07780-0012400 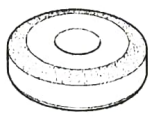 or equivalent commercially available in U.S.A.	Flat cutter, 33 mm (32° EX) 07780-0012900 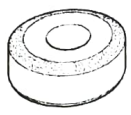 or equivalent commercially available in U.S.A.

Interior cutter, 37.5 mm (60° IN) 07780-0014100  or equivalent commercially available in U.S.A.	Interior cutter, 34 mm (60° EX) 07780-0014700 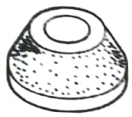 or equivalent commercially available in U.S.A.

TROUBLESHOOTING

- Engine top-end problems usually affect engine performance. These can be diagnosed by a compression test, or by tracing noises to the top-end with a sounding rod or stethoscope.
- If the performance is poor at low speeds, check for white smoke in the crankcase breather hose. If the hose is smoky, check for seized piston ring (page 15-12).

Compression too low, hard starting or poor performance at low speed

- Valves:
  - Incorrect valve clearance
  - Burned or bent valve
  - Incorrect valve timing
  - Broken valve spring
  - Uneven valve seating
  - Valve stuck open
- Cylinder head:
  - Leaking or damaged cylinder head gasket
  - Loose spark plug
  - Warped or cracked cylinder head
- Cylinder/piston problem (page 15-2)

Compression too high, overheating or knocking

- Excessive carbon build-up on piston head or combustion chamber

Excessive smoke

- Worn valve stem or valve guide
- Damaged stem seal
- Cylinder/piston problem (page 15-2)

Excessive noise

- Incorrect valve clearance
- Sticking valve or broken valve spring
- Excessively worn valve seat
- Worn or damaged camshaft
- Worn rocker arm and/or shaft
- Worn rocker arm follower or valve stem end
- Loose or worn cam chain
- Worn or damaged cam chain tensioner
- Worn cam sprocket teeth
- Cylinder/piston problem (page 15-2)

Rough idle

- Low cylinder compression

COMPONENT LOCATION

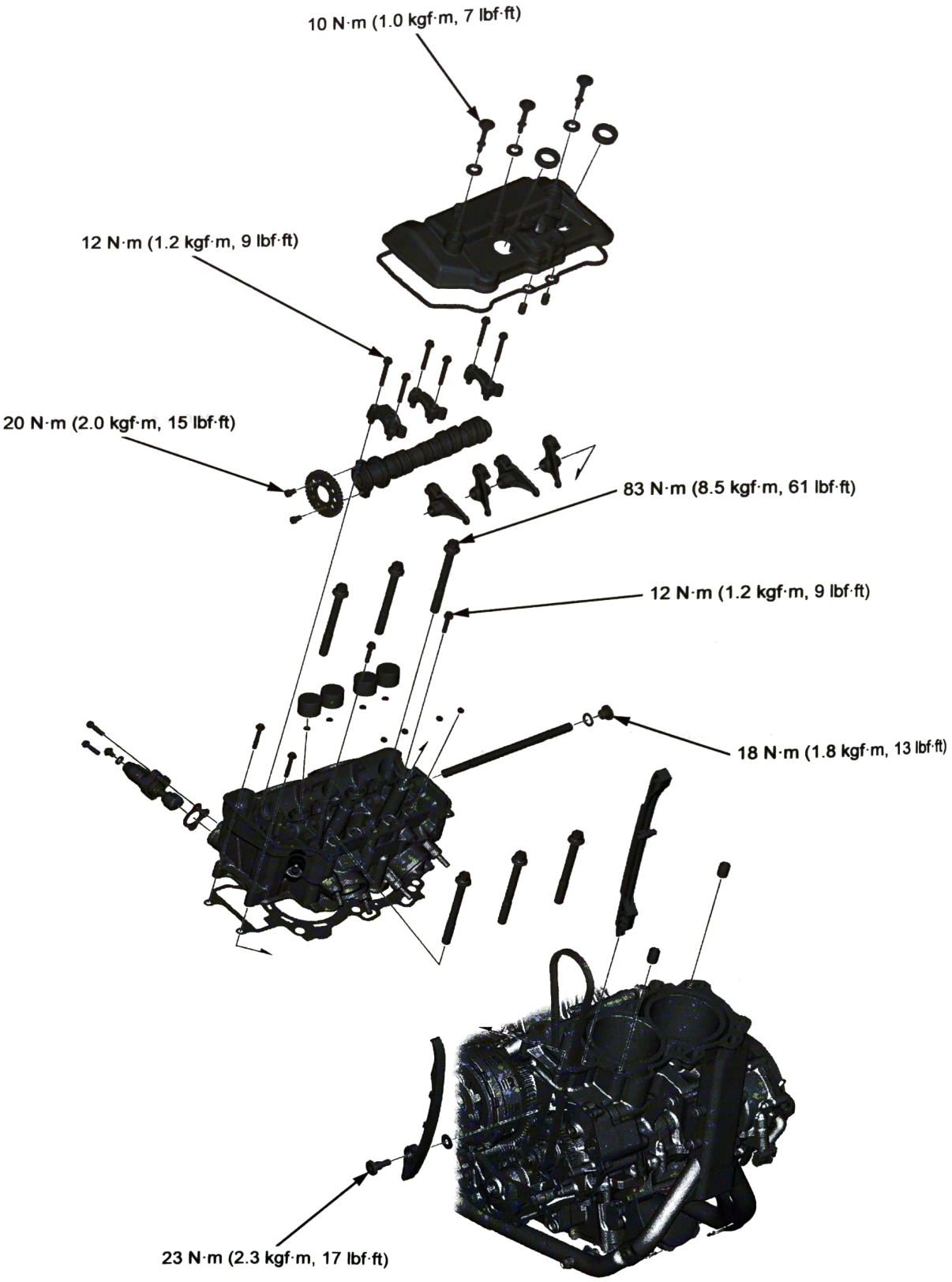

CYLINDER COMPRESSION

Warm up the engine to normal operating temperature. Stop the engine, and remove the spark plugs (page 3-6).

Disconnect the fuel pump unit 5P (Black) connector (page 7-7).

Install the compression gauge [1] into the open spark plug hole.

Turn the ignition switch ON and engine stop switch "○".

MT type: Shift the transmission into the neutral position.

Open the throttle all the way and crank the engine with the starter motor until the gauge reading stops rising. The maximum reading is usually reached within 4 – 7 seconds.

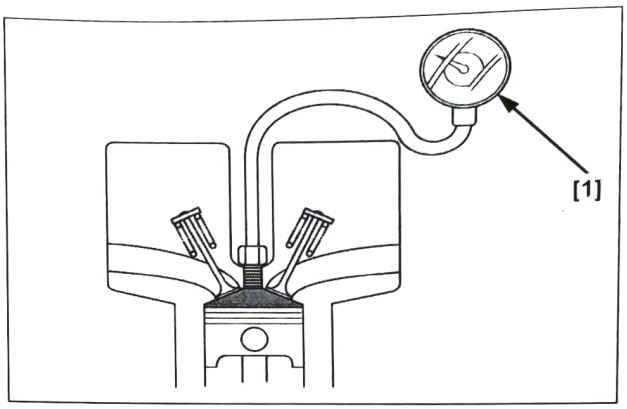

COMPRESSION PRESSURE:
1.4 MPa (14.3 kgf/cm², 203 psi) at 500 rpm

Low compression can be caused by:

- Blown cylinder head gasket
- Improper valve adjustment
- Valve leakage
- Worn piston ring or cylinder

High compression can be caused by:

- Carbon deposits in combustion chamber or on piston head

CYLINDER HEAD COVER

REMOVAL

Remove the air cleaner housing (page 7-10).

Disconnect the secondary air supply hose [1].

Remove the cylinder head cover bolts [2] and mounting rubbers [3].

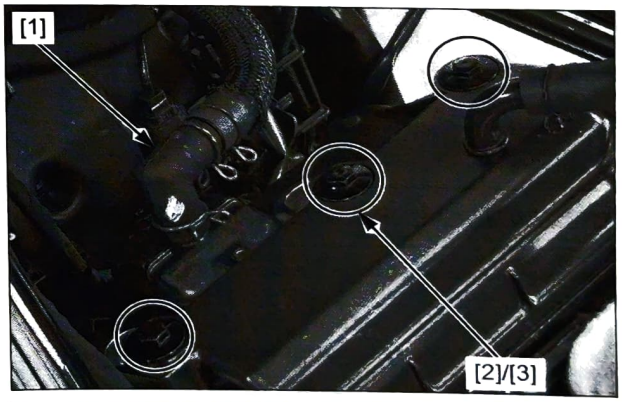

Remove the cylinder head cover [1] to the right side as shown.



Remove the plug pipe seals [1] and cylinder head cover packing [2] from the cylinder head cover.

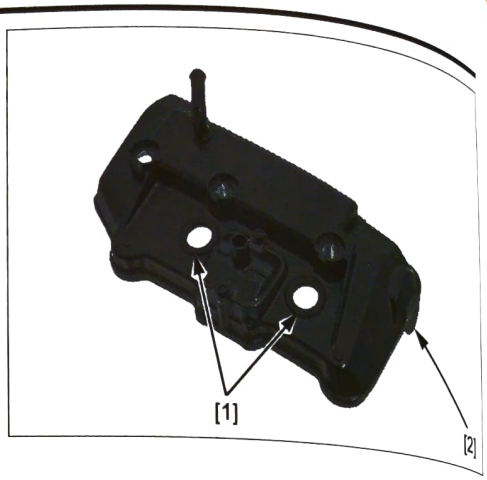

INSTALLATION

Install new plug pipe seals [1] to the cylinder head cover.

NOTE:

- Install the plug pipe seals with their "OUTSIDE" marks [2] facing up.

Install a new cylinder head cover packing [3] to the cylinder head cover.

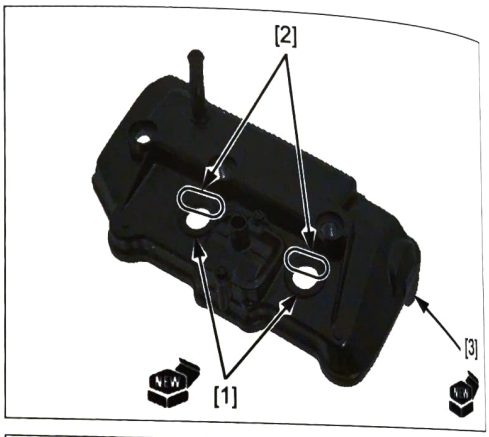

Clean the cylinder head [1] mating surface thoroughly.

Apply liquid sealant (TB5211C manufactured by ThreeBond, KE45T manufactured by Shin-Etsu Silicone or an equivalent) to the cylinder head cover packing [2] as shown.

NOTE:

- Do not apply more liquid sealant than necessary.

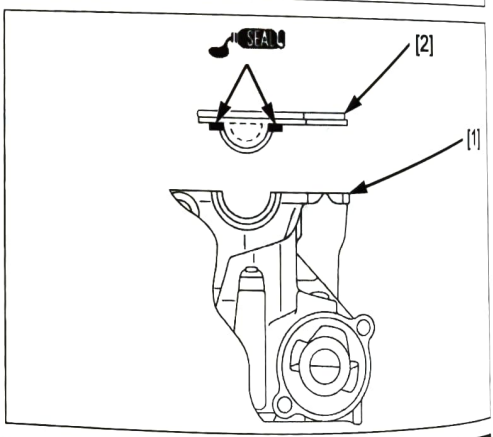

Insert the cylinder head cover [1] from the right side as shown.



Install the cylinder head cover [1] on the cylinder head.

NOTE:

- Be sure to be installed the dowel pins [2] of the cylinder head cover to the cylinder head holes securely.

Check that the mounting rubbers [3] are in good condition, and replace them if necessary.

Install the mounting rubbers.

NOTE:

- Install the mounting rubbers with their "UP" marks [4] facing up.

Install and tighten the cylinder head cover bolts [5] to the specified torque.

TORQUE: 10 N·m (1.0 kgf·m, 7 lbf·ft)

Connect the secondary air supply hose [6].

Install the air cleaner housing (page 7-10).

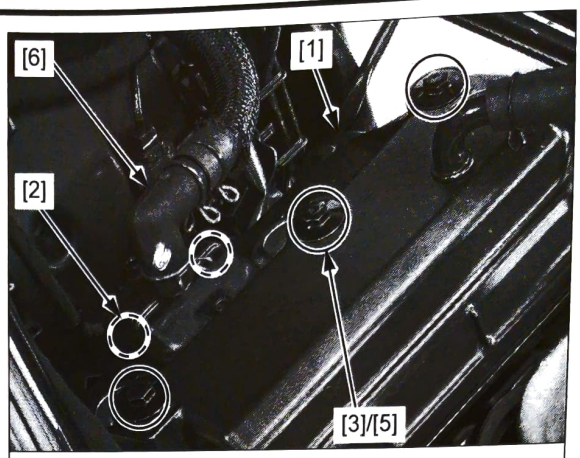

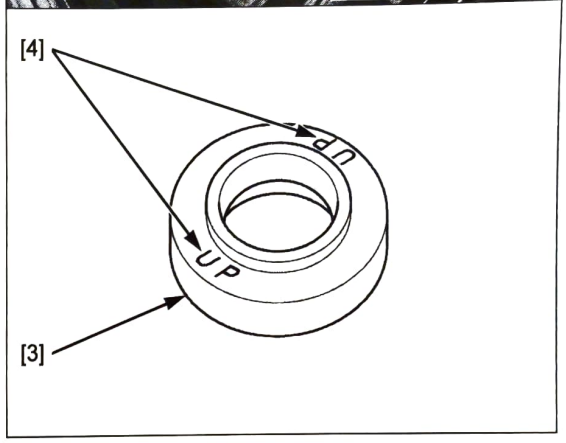

ROCKER ARM

REMOVAL

Remove the following:

- Cylinder head cover (page 10-5)
- Crankshaft hole cap (page 3-7)
- Timing hole cap (page 3-7)

Turn the crankshaft counterclockwise and align the "T1" mark [1] on the flywheel with the index mark [2] of the alternator cover.

Make sure that the index lines [3] on the cam sprocket align with the upper surface of the cylinder head and the punch mark [4] on the sprocket is visible.

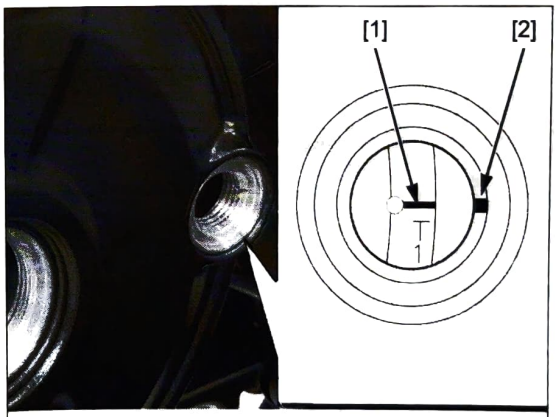

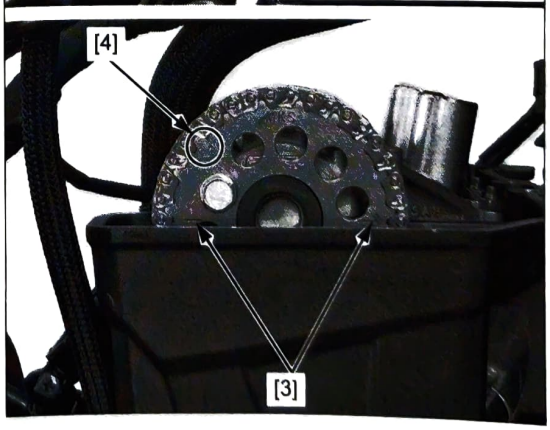

Remove the rocker arm shaft stopper bolt [1], sealing washer [2], and rocker arm shaft bolts [3].

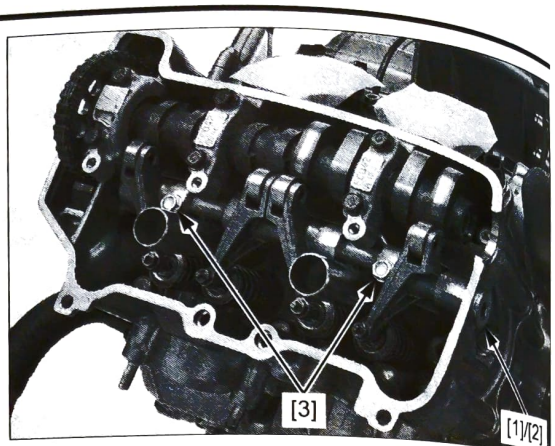

Temporarily install a suitable 6 mm bolt [1] to the rocker arm shaft [2].

Remove the rocker arm shaft by pulling the suitable 6 mm bolt.

Remove the suitable 6 mm bolt from the rocker arm shaft.

Remove the rocker arms A [3] and B [4].

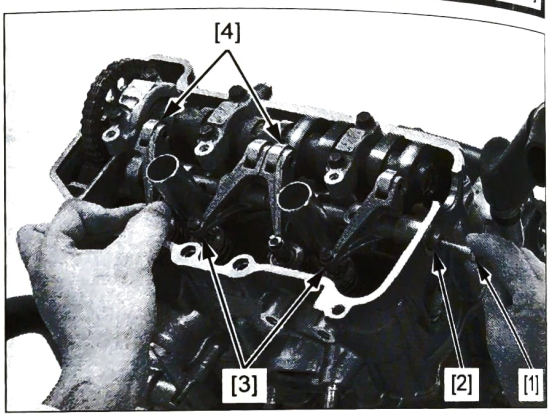

INSPECTION

Inspect the following parts for damage, abnormal wear, deformation, burning.

- Rocker arm A
- Rocker arm B
- Rocker arm shaft

Measure each part according to CYLINDER HEAD/VALVE/CAMSHAFT SPECIFICATIONS (page 1-6).

Replace any part if it is out of the service limit.

INSTALLATION

Turn the crankshaft counterclockwise and align the "T1" mark [1] on the flywheel with the index mark [2] of the alternator cover.

Make sure that the index lines [3] on the cam sprocket align with the upper surface of the cylinder head and the punch mark [4] on the sprocket is visible.

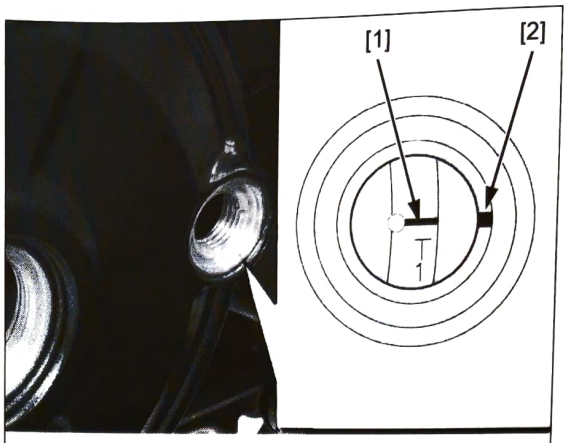

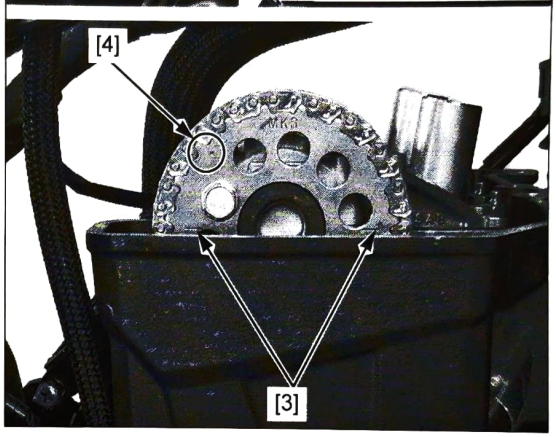

The rocker arms have the following identification marks:

- "SAA" mark [1]: rocker arm A
- "SAB" mark [2]: rocker arm B

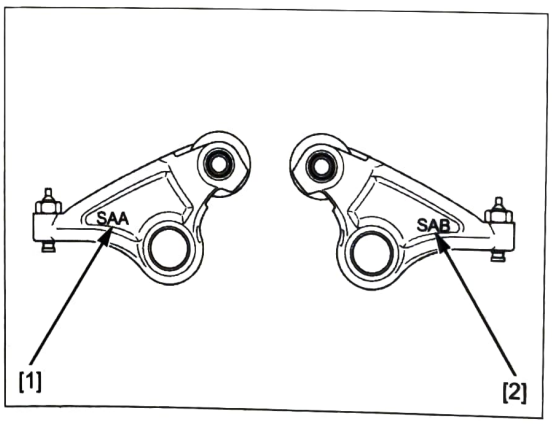

Apply molybdenum oil solution to the rocker arm sliding area and thrust surface.

Apply molybdenum oil solution to the rocker arm shaft outer surface.

Temporarily install a suitable 6 mm bolt [1] to the rocker arm shaft [2].

Install the rocker arms A [3] and B [4].

Install the rocker arm shaft.

NOTE:

- Install the rocker arm shaft by aligning its grooves with the rocker arm shaft bolt holes of the cylinder head.

Apply engine oil to the rocker arm shaft bolt threads and seating surface.

Install and tighten the rocker arm shaft bolts [5] to the specified torque.

TORQUE: 12 N·m (1.2 kgf·m, 9 lbf·ft)

Remove the suitable 6 mm bolt from the rocker arm shaft.

Install the rocker arm shaft stopper bolt [6] and a new sealing washer [7].

Tighten the rocker arm shaft stopper bolt to the specified torque.

TORQUE: 18 N·m (1.8 kgf·m, 13 lbf·ft)

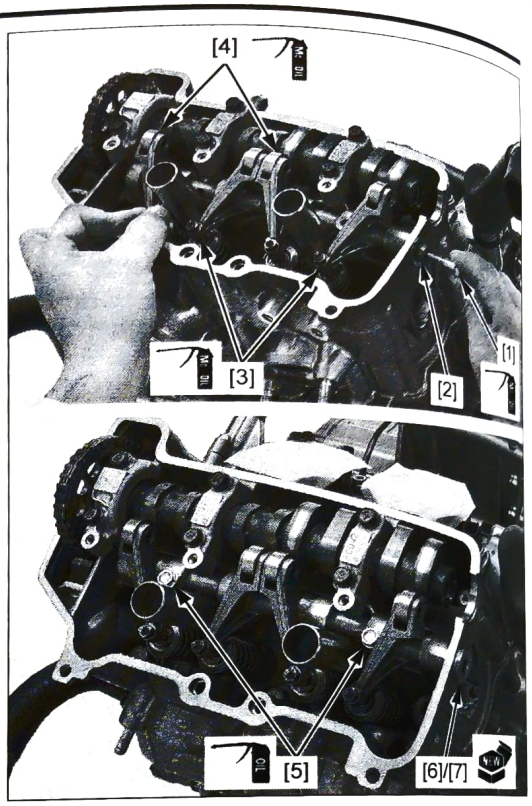

Install the following:

- Cylinder head cover (page 10-6)
- Crankshaft hole cap (page 3-7)
- Timing hole cap (page 3-7)

CAM CHAIN TENSIONER LIFTER

REMOVAL

Remove the cam chain tensioner lifter plug [1] and sealing washer [2].

Release the cam chain tension by turning the cam chain tensioner lifter shaft fully in (clockwise) and secure it using the special tool.

TOOL:
Tensioner holder B [3] **070MG-0010100**

U.S.A. TOOL:
Tensioner holder **07AMG-001A100 or 07AMG-MFJA100**

Remove the bolts [4], cam chain tensioner lifter [5] and gasket [6].

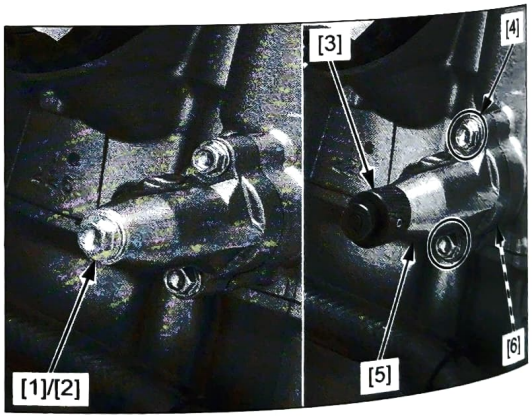

INSTALLATION

Install the cam chain tensioner lifter [1] and a new gasket [2].

Install and tighten the mounting bolts [3].

Remove the below special tool [4].

Install the cam chain tensioner lifter plug [5] and a new sealing washer [6].
Tighten the plug securely.

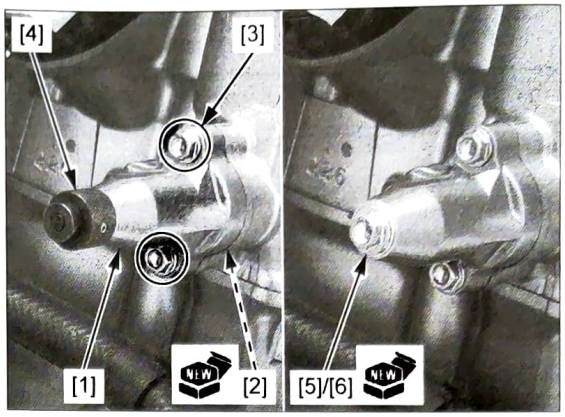

INSPECTION

Check the cam chain tensioner lifter operation:

- The cam chain tensioner lifter shaft [1] should not go into the lifter body when it is pushed.
- When it is turned clockwise with the tensioner holder or a screwdriver [2], the shaft should be pulled into the lifter body. The shaft should spring out of the lifter body as soon as the screwdriver is released.

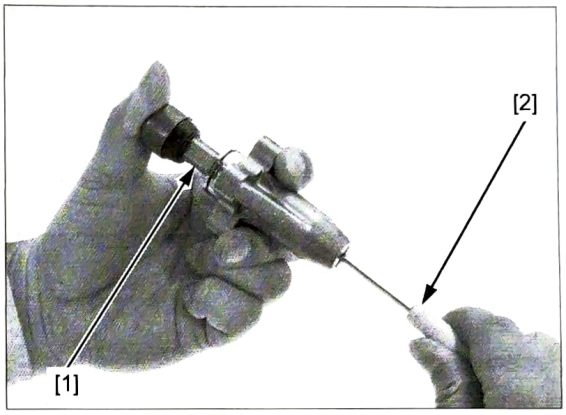

CAMSHAFT

REMOVAL

Remove the rocker arms (page 10-7).

Turn the crankshaft counterclockwise and align the "T2" mark [1] on the flywheel with the index mark [2] of the alternator cover.

Make sure that the punch mark [3] on the cam sprocket aligns with the upper surface of the cylinder head as shown.

If you plan to disassemble the camshaft and cam sprocket, loosen the cam sprocket bolts [4] at this point.

NOTE:

- Do not remove the cam sprocket bolts yet.

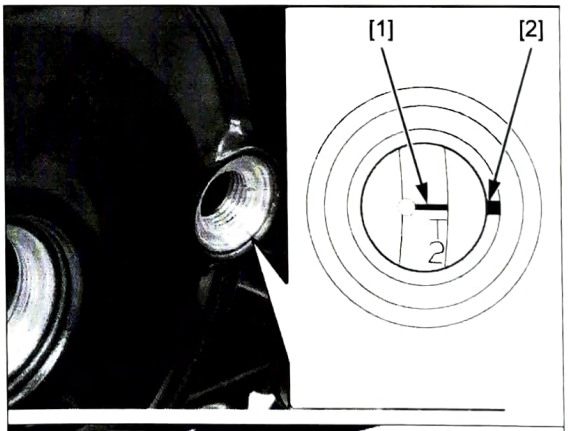

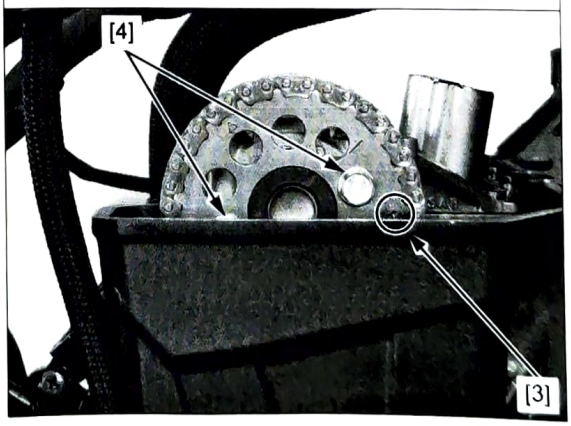

Remove the cam chain tensioner lifter plug [1] and sealing washer [2].

Release the cam chain tension by turning the cam chain tensioner lifter shaft fully in (clockwise) and secure it using the below special tool.

TOOL:
Tensioner holder B [3] **070MG-0010100**

U.S.A. TOOL:
Tensioner holder **07AMG-001A100 or 07AMG-MFJA100**

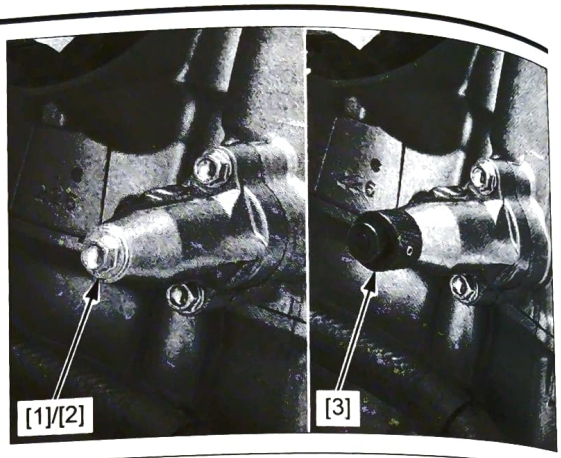

Loosen the camshaft holder bolts [1].

NOTE:
- Loosen the camshaft holder bolts in a crisscross pattern in 2 or 3 steps.

Remove the camshaft holder bolts and camshaft holders [2].

NOTE:
- Be careful not to let the camshaft holder bolts fall into the crankcase.
- Do not forcibly remove the dowel pins from the camshaft holders.

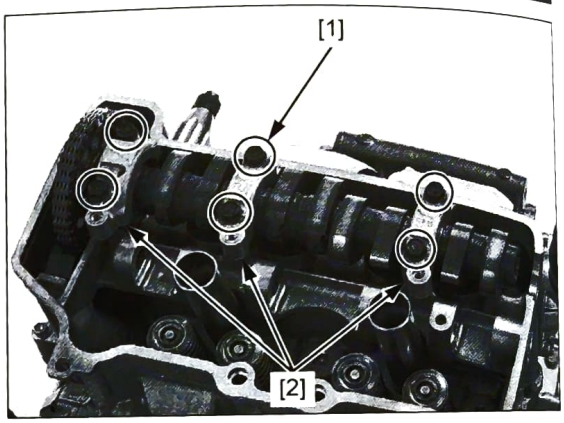

Remove the camshaft [1] by releasing the cam chain [2].

NOTE:
- Attach a piece of wire to the cam chain to prevent it from falling into the crankcase.

Remove the cam sprocket bolts [3] and cam sprocket [4] from the camshaft if necessary.

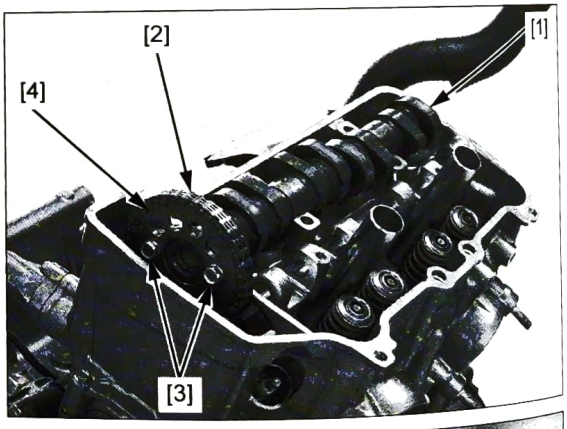

Remove the valve lifters [1] and shims [2].

NOTE:
- Do not allow the shims to fall into the crankcase.
- Mark all valve lifters and shims to ensure correct reassembly in their original locations.
- The shims can be easily removed with tweezers or a magnet.

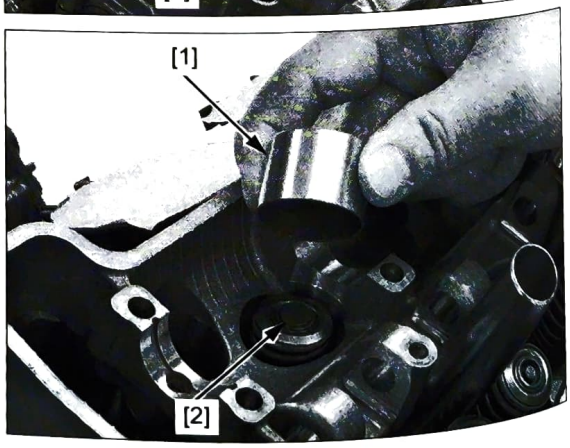

INSPECTION

Inspect the following parts for damage, abnormal wear, deformation, burning, or clogs in oil passages.

- Cam sprocket
- Camshaft
- Camshaft holder
- Valve lifter

Measure each part according to CYLINDER HEAD/VALVE/CAMSHAFT SPECIFICATIONS (page 1-6).

Replace any part if it is out of the service limit.

CAMSHAFT OIL CLEARANCE

NOTE:

- Do not rotate the camshaft during inspection.

Wipe any oil from the journals of the cylinder head, camshaft and camshaft holder.

Set the camshaft onto the cylinder head without installing the shims, valve lifters, and cam chain.

Lay a strip of plastigauge [1] lengthwise on each camshaft journal and be sure to avoid the oil passages.

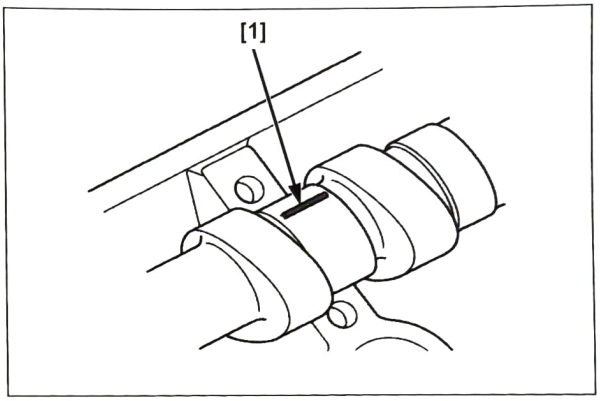

Install the camshaft holders [1] in the correct locations (page 10-14).

NOTE:

- Be careful not to drop the plastigauge.

Apply engine oil to the threads and seating surfaces of the camshaft holder bolts.

Install and tighten the camshaft holder bolts [2] to the specified torque.

TORQUE: 12 N·m (1.2 kgf·m, 9 lbf·ft)

NOTE:

- Tighten the camshaft holder bolts in a crisscross pattern in 2 or 3 steps.

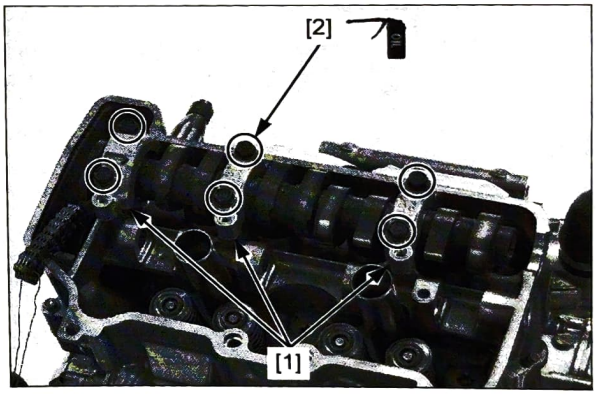

Loosen the camshaft holder bolts.

NOTE:

- Loosen the camshaft holder bolts in a crisscross pattern in 2 or 3 steps.

Remove the camshaft holder bolts and camshaft holders.

Measure the compressed plastigauge at its widest point on the camshaft to determine the oil clearance.

SERVICE LIMIT: 0.10 mm (0.004 in)

If the oil clearance exceeds the service limit, replace the camshaft and recheck the oil clearance.

Replace the cylinder head and camshaft holders as a set if the oil clearance still exceeds the service limit.

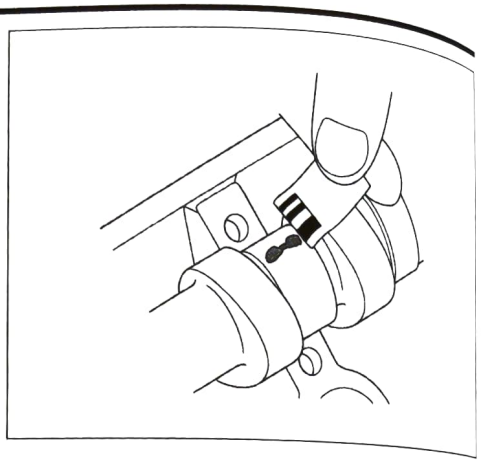

INSTALLATION

Turn the crankshaft counterclockwise and align the "T2" mark [1] on the flywheel with the index mark [2] of the alternator cover.

NOTE:

- Be careful not to jam the cam chain and timing sprocket of the crankshaft when rotating the crankshaft.

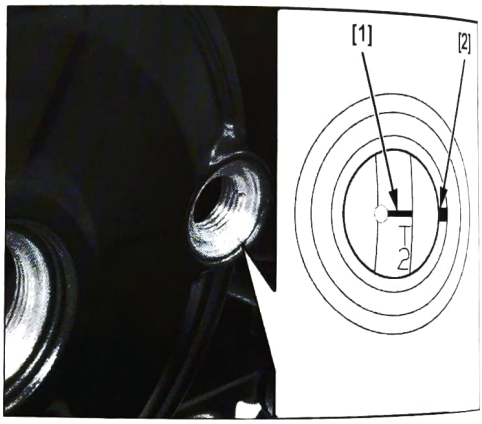

Install the shims [1] and valve lifters [2].

NOTE:

- Do not allow the shims to fall into the crankcase.
- Install all valve lifters and shims in their original locations.

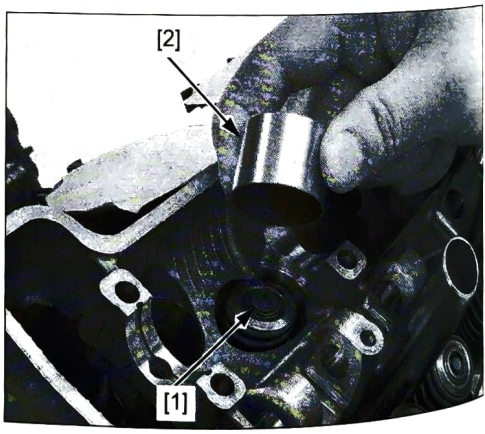

If the cam sprockets bolts are removed, apply locking agent to the cam sprocket bolts threads.
Loosely install the cam sprocket [1] and cam sprocket bolts [2] to the camshaft [3].

Apply molybdenum oil solution to the camshaft journal, cam lobes, and thrust surfaces.
Apply engine oil to the cam chain whole surface.

Install the cam chain [4] over the cam sprocket.

Set the camshaft onto the cylinder head.

NOTE:

- Make sure that the punch mark [5] on the cam sprocket aligns with the upper surface of the cylinder head as shown.
- Make sure that the camshaft end groove [6] is in position as shown.

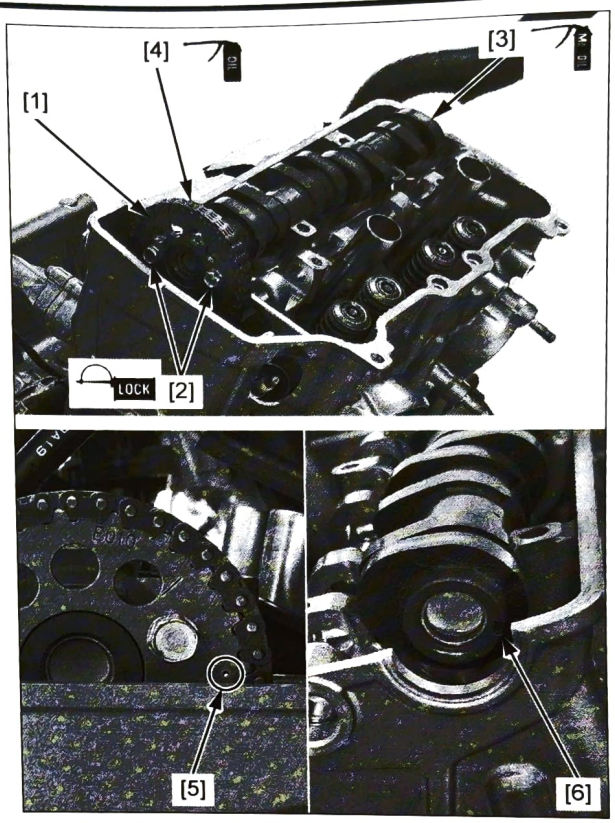

Apply molybdenum oil solution to the camshaft holder B inside.

Install the camshaft holder B [1].

NOTE:

- Align the groove of the camshaft holder B with the guide of the camshaft.

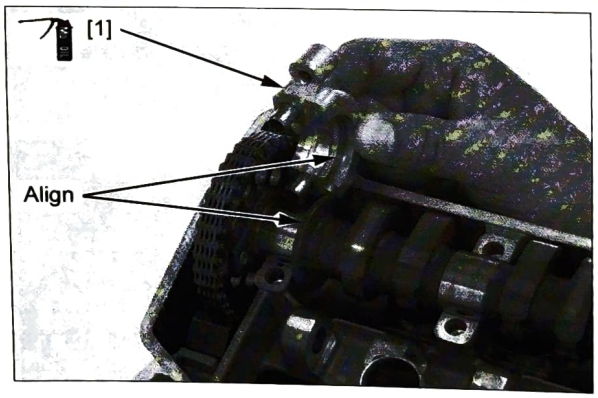

Apply molybdenum oil solution to the left camshaft holder A and right camshaft holder A insides.

Install the left camshaft holder A [1] and right camshaft holder A [2].

NOTE:

- The left camshaft holder A and right camshaft holder A have the following identification marks:
  - "A" mark [3]: left camshaft holder A
  - "B" mark [4]: right camshaft holder A

Apply engine oil to the camshaft holder bolts threads and seating surfaces.

Install and tighten the camshaft holder bolts [5] to the specified torque.

TORQUE: 12 N·m (1.2 kgf·m, 9 lbf·ft)

NOTE:

- Tighten the camshaft holder bolts in a crisscross pattern in 2 or 3 steps.

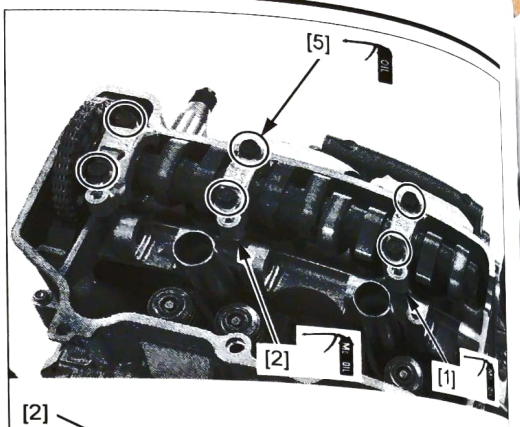

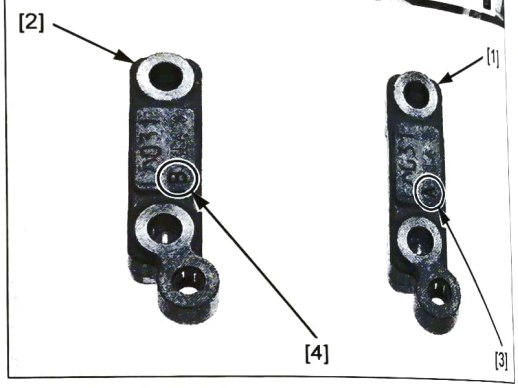

Remove the special tool [1].

Install the cam chain tensioner lifter plug [2] and a new sealing washer [3].
Tighten the plug securely.

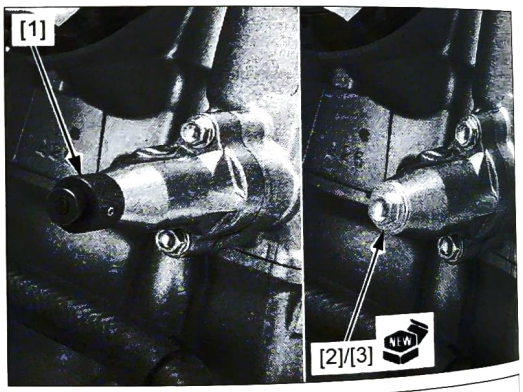

If the cam sprocket bolts are removed, tighten the cam sprocket bolts [1] to the specified torque.

TORQUE: 20 N·m (2.0 kgf·m, 15 lbf·ft)

Install the rocker arms (page 10-9).

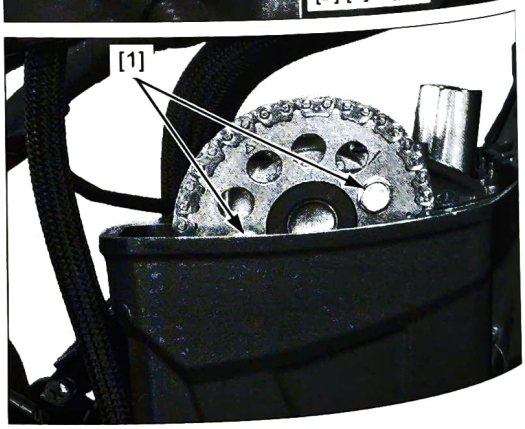

CYLINDER HEAD/CAM CHAIN TENSIONER

REMOVAL

Remove the following:

- Exhaust pipe (page 2-17)
- Throttle body (page 7-11)
- Thermostat (page 8-6)
- Right crankcase cover (MT type) (page 12-5)
- Primary drive gear (DCT type) (page 13-51)
- Camshaft (page 10-11)

Remove the 6 mm bolts [1].

Loosen the cylinder head bolt/washers [2].

NOTE:

- Loosen the cylinder head bolt/washers in a crisscross pattern in 2 or 3 steps.

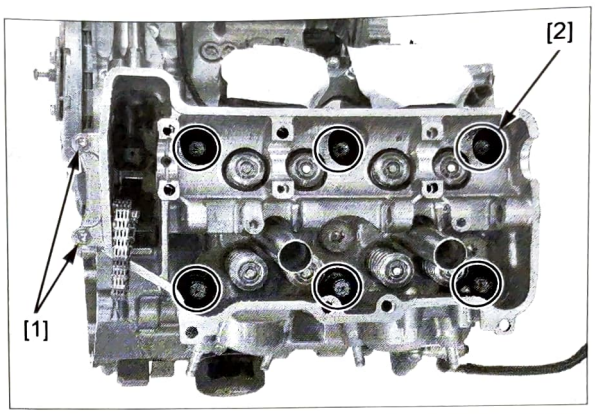

Remove the cam chain tensioner bolt [1], cam chain tensioner [2], and washer [3].

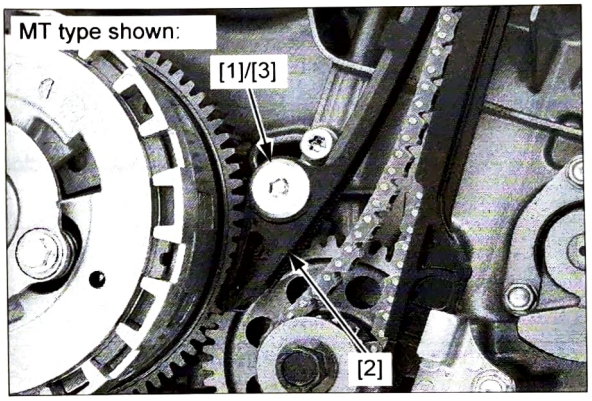

Lift up the cylinder head [1] and gasket [2] to get the clearance for cam chain guide [3] removal.

NOTE:

- Do not tap the cylinder head too hard and do not damage the mating surface with a screwdriver.

Remove the cam chain guide.

Remove the cylinder head to the right side.

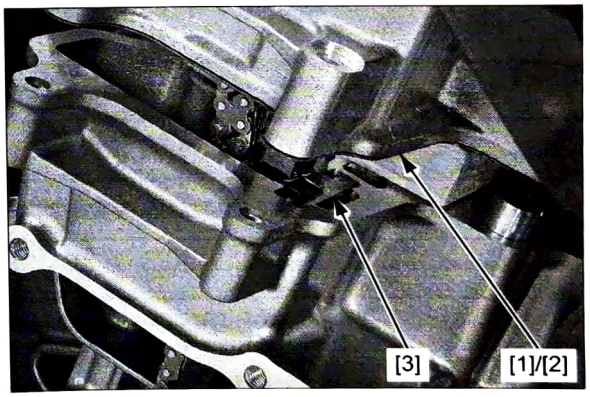

Remove the gasket [1] and dowel pins [2].

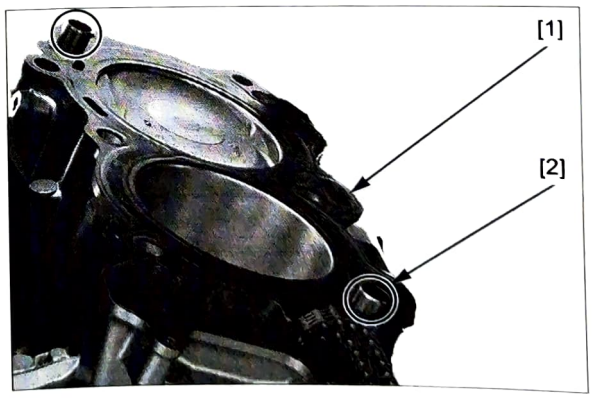

DISASSEMBLY

Remove the following:

- Insulator (page 10-25)
- Cam chain tensioner lifter (page 10-10)
- Spark plugs (page 3-6)
- ECT sensor (page 4-57)

Install the tappet hole protector into the valve lifter bore.

A tool can easily be made from a plastic 35 mm film container or equivalent as shown.

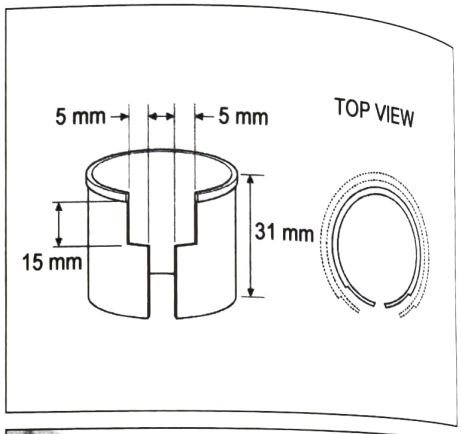

Remove the valve cotters [1] using the special tool as shown.

TOOL:

Valve spring compressor [2] **07757-0010000**

NOTE:

- To prevent loss of tension, do not compress the valve springs more than necessary.

Remove the tappet hole protector.

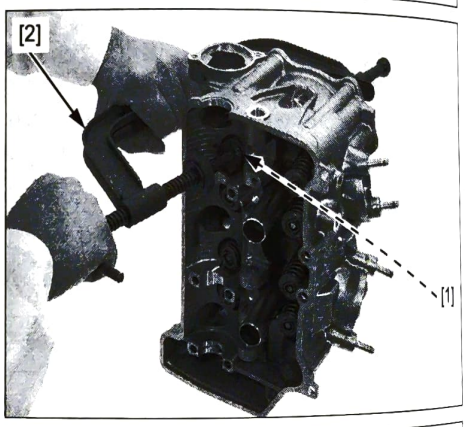

Remove the following:

- Spring retainers [1]
- Intake valve springs [2]
- Exhaust valve springs [3]
- Intake valves [4]
- Exhaust valves [5]
- Intake stem seals [6]
- Exhaust stem seals [7]
- Spring seats [8]

NOTE:

- Mark all the parts so they can be placed back in their original location.

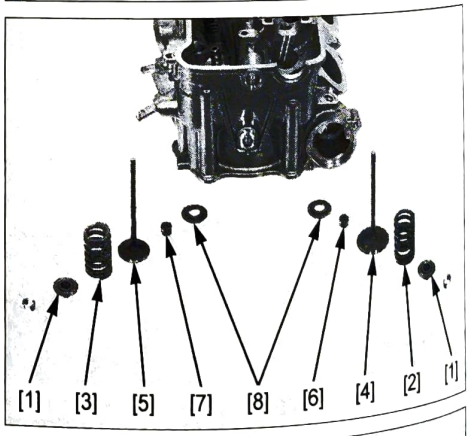

Remove carbon deposits from the combustion chamber [1].

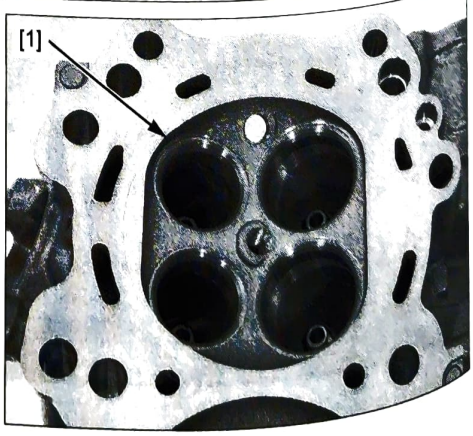

INSPECTION

Inspect the following parts for damage, abnormal wear, deformation, burning or clogs in oil passages.

- Cylinder head
- Valve springs
- Valves
- Valve guides
- Cam chain tensioner
- Cam chain guide

Measure each part according to CYLINDER HEAD/VALVE/CAMSHAFT SPECIFICATIONS (page 1-6).

Replace any part if it is out of service limit.

NOTE:

- Ream the valve guide using the valve guide reamer to remove any carbon build up before measuring the guide (page 10-19).
- Refer to valve seat inspection (page 10-20).

VALVE GUIDE REPLACEMENT

Disassemble the cylinder head (page 10-18).

Chill the replacement valve guides in the freezer section of a refrigerator for about an hour.

Heat the cylinder head to 100 – 150°C (212 – 302°F) with a hot plate or oven.

NOTE:

- To avoid burns, wear heavy gloves when handling the heated cylinder head.
- Do not use a torch to heat the cylinder head; it may cause warping.

Support the cylinder head and drive out the valve guides from combustion chamber side of the cylinder head.

TOOL:
Valve guide driver, 5.5 mm [1] 07742-0010100

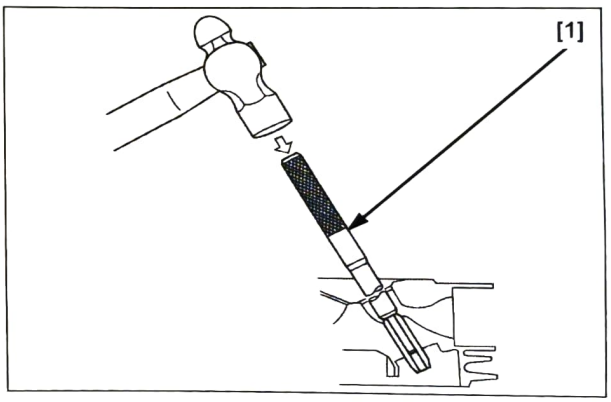

Drive in the valve guides [1] to the specified depth from the top of cylinder head.

SPECIFIED DEPTH:
IN: 12.9 – 13.2 mm (0.51 – 0.52 in)
EX: 15.1 – 15.4 mm (0.59 – 0.61 in)

TOOL:
Valve guide driver, 5.5 mm [2] 07742-0010100

Let the cylinder head cool to room temperature.

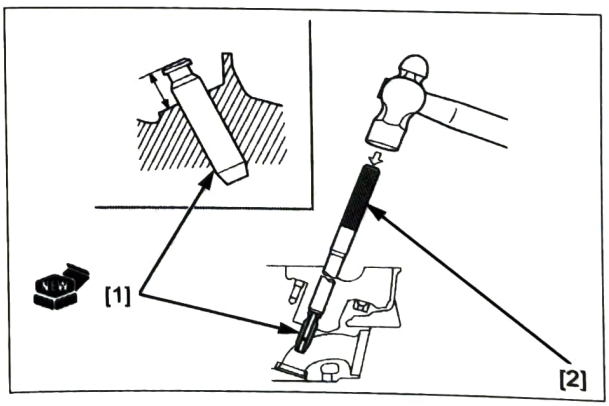

Insert the reamer [1] from the combustion chamber side.

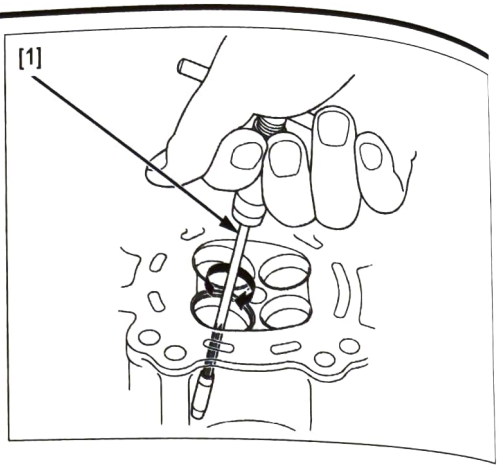

TOOL:

Valve guide reamer, 5.5 mm	**07984-2000001 or 07984-200000D (U.S.A. only)**

NOTE:

- Always rotate the reamer clockwise.
- Use cutting oil on the reamer during this operation.
- Take care not to tilt or lean the reamer in the guide while reaming.

Clean the cylinder head thoroughly to remove any metal particles.

Inspect the valve seat (page 10-20).

VALVE SEAT INSPECTION

Disassemble the cylinder head (page 10-18).

Clean the intake and exhaust valves thoroughly to remove carbon deposits.

Apply a light coating of Prussian Blue to the valve seats.

Tap the valves and seats using a rubber hose or other hand-lapping tool [1].

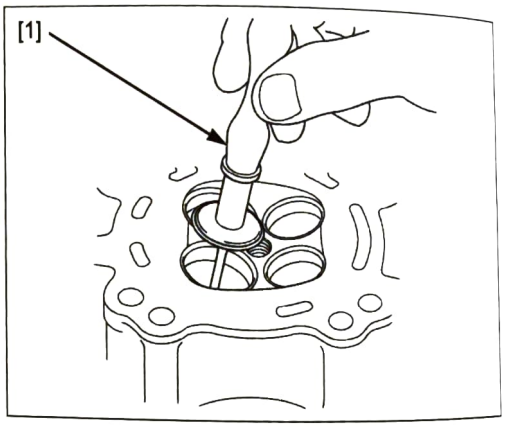

Measure the valve seat width according to CYLINDER HEAD/VALVE/CAMSHAFT SPECIFICATIONS (page 1-6).

Reface the valve seat (page 10-21)in the following cases:

- Valve seat contact area is too wide or too narrow
- Valve seat contact surface is not center
- Damaged valve seat contact face

NOTE:

- The valves cannot be grounded. If the valve face is burned, badly worn, or if it contacts the seat unevenly, replace the valve.

If the contact surface of the valve seat is abnormal or the valve is tilted, inspect the valve stem-to-valve guide clearance (page 1-6).
If the valve stem-to-valve guide clearance are normal, replace the valve guide (page 10-19).

VALVE SEAT REFACING

Inspect the valve seat (page 10-20).

Reface the valve seat using the following tools:

TOOLS:

Cutter holder, 5.5 mm	**07781-0010101**
Seat cutter, 40 mm (45° IN)	**07780-0010500**
Seat cutter, 35 mm (45° EX)	**07780-0010400**
Flat cutter, 38.5 mm (32° IN)	**07780-0012400**
Flat cutter, 33 mm (32° EX)	**07780-0012900**
Interior cutter, 37.5 mm (60° IN)	**07780-0014100**
Interior cutter, 34 mm (60° EX)	**07780-0014700**

or equivalent commercially available in U.S.A.

STANDARD:

IN: 1.1 – 1.3 mm (0.04 – 0.05 in)
EX: 1.3 – 1.5 mm (0.05 – 0.06 in)

SERVICE LIMITS:

IN: 1.5 mm (0.06 in)
EX: 1.9 mm (0.07 in)

NOTE:

- Follow the refacer manufacturer's operating instructions.
- Be careful not to grind the seat more than necessary.

1. Use a 45° seat cutter, remove any roughness or irregularities from the seat.
2. Use a 32° flat cutter, remove the top 1/4 of the existing valve seat material.
3. Use a 60° interior cutter, remove the bottom 1/4 of the existing valve seat material.
4. Using a 45° seat cutter, cut the seat to the proper width.
   Make sure that all pitting and irregularities are removed.
5. After cutting the seat, apply lapping compound to the valve face, and lap the valve using light pressure.

NOTE:

- Excessive lapping pressure may deform or damage the seat.
- Change the angle of lapping tool [1] frequently to prevent uneven seat wear.
- Do not allow any lapping compound to enter the guides.

After lapping, wash any residual compound off the cylinder head and valve and recheck the seat contact.

Assemble the cylinder head (page 10-22).

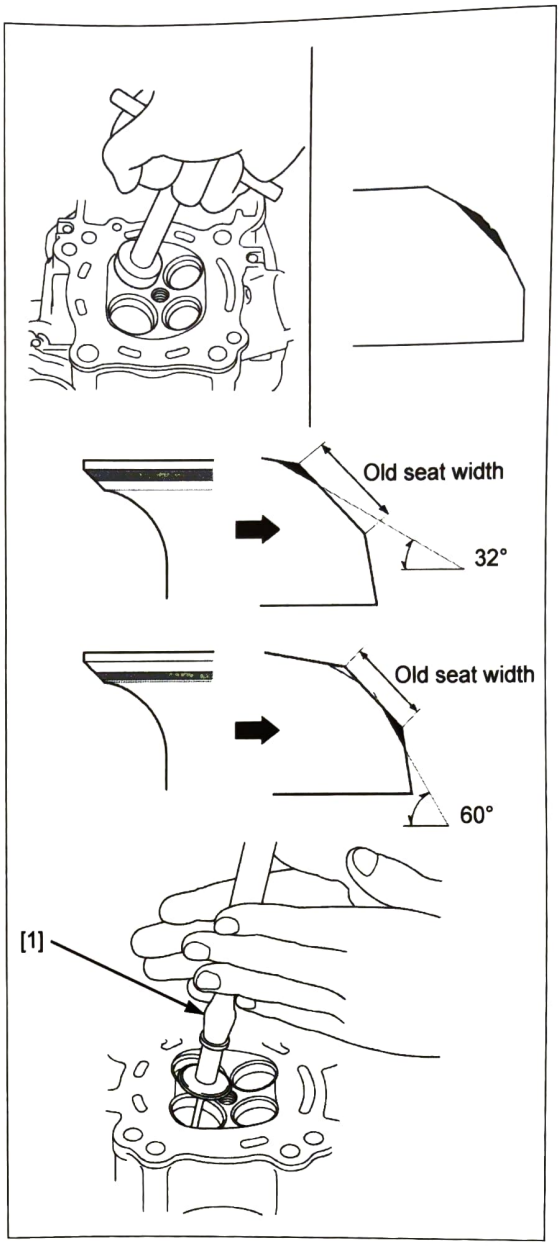

ASSEMBLY

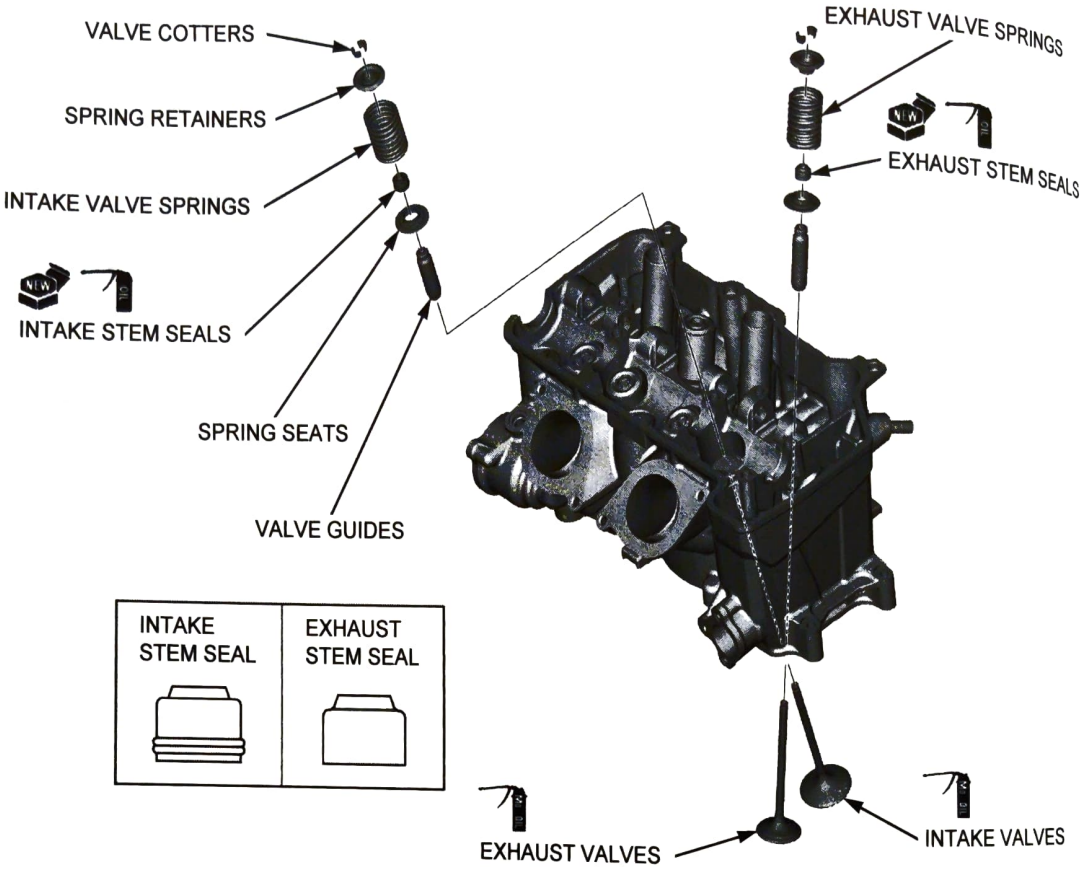

Blow through the oil passage in the cylinder head with compressed air.

Install the spring seats [1].

Apply engine oil to the inside of new stem seals.
Install new intake stem seals [2] and exhaust stem seals [3].

Apply molybdenum oil solution to the valve stem sliding area and stem end.
Insert the intake valves [4] and exhaust valves [5] into the valve guide while turning them slowly to avoid damage to the stem seal.

Install the intake valve springs [6] and exhaust valve springs [7] with the tightly wound coils facing the combustion chamber.

NOTE:

- The valve springs have paint marks:
  - Intake valve spring: Green paint
  - Exhaust valve spring: Pink paint

Install the valve spring retainers [8].

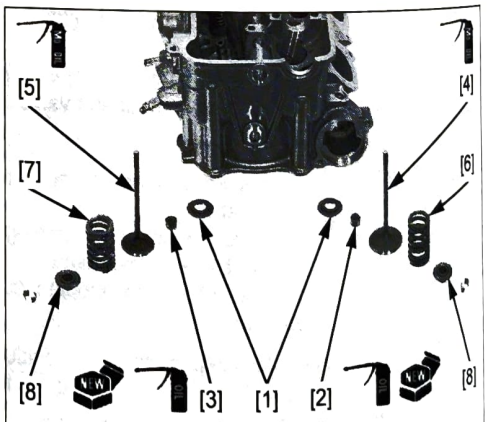

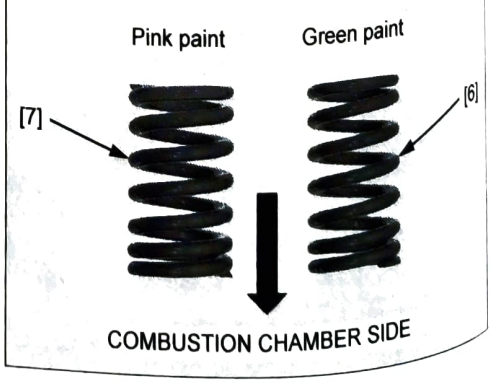

Install the tappet hole protector into the valve lifter bore (page 10-18).

Install the valve cotters [1] using the special tool as shown.

TOOL:

Valve spring compressor [2] **07757-0010000**

NOTE:

- To prevent loss of tension, do not compress the valve springs more than necessary.

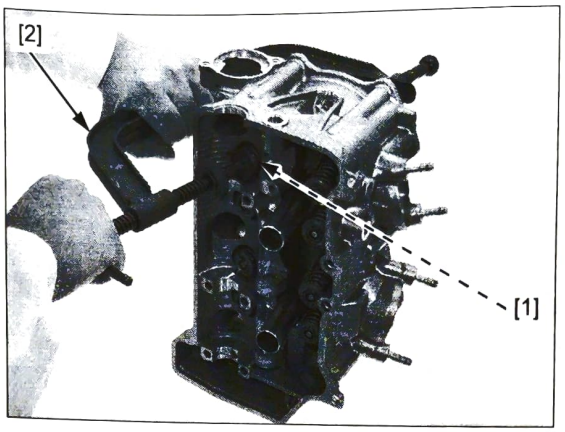

Tap the tool gently to seat the valve cotters firmly using a hammer.

NOTE:

- Support the cylinder head above the work bench surface to prevent valve damage.

Install the following:

- Cam chain tensioner lifter (page 10-11)
- Spark plugs (page 3-6)
- ECT sensor (page 4-57)
- Insulator (page 10-25)

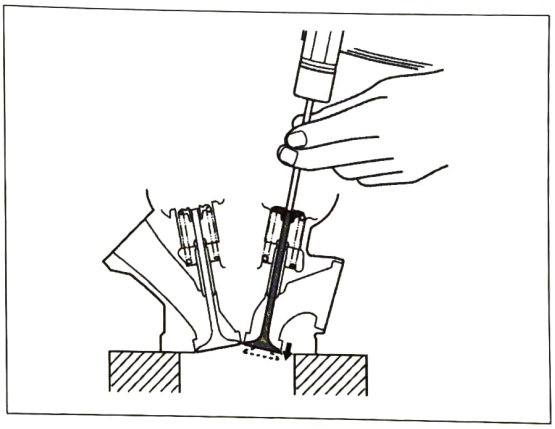

INSTALLATION

Install the dowel pins [1] and a new gasket [2].

NOTE:

- Route the cam chain [3] through the gasket.

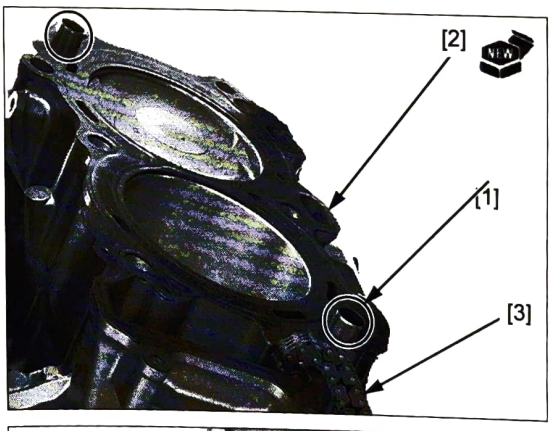

Install the cylinder head [1] from the right side.

NOTE:

- Route the cam chain [2] through the cylinder head.

Lift up the cylinder head and gasket [3] to get the clearance for cam chain guide installation.

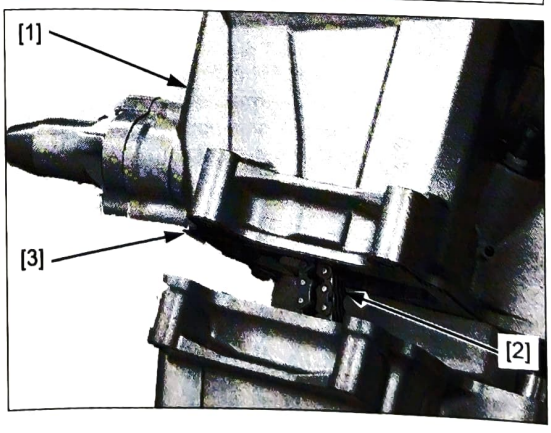

Install the cam chain guide [1].

NOTE:

- Align the cam chain guide end with the groove in the cam chain guide plate.
- Align the cam chain guide tabs [2] with the grooves in the crankcase [3].

Install the gasket [4] and cylinder head [5] onto the crankcase.

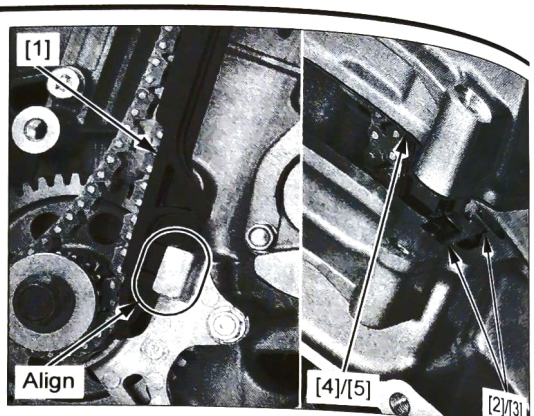

Apply locking agent to the cam chain tensioner pivot bolt threads.

Install the washer [1], cam chain tensioner [2], and cam chain tensioner pivot bolt [3].

Tighten the bolt to the specified torque.

TORQUE: 23 N·m (2.3 kgf·m, 17 lbf·ft)

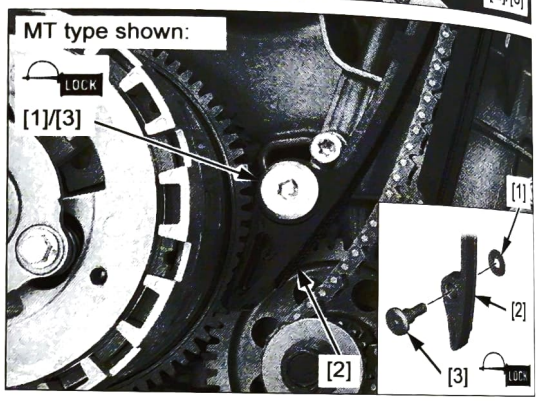

Apply molybdenum oil solution to the cylinder head bolt threads and seating surface of cylinder head bolt/ washers.

Apply engine oil to the washer of cylinder head bolt/ washers.

Install and tighten the cylinder head bolt/washers [1] to the specified torque.

TORQUE: 83 N·m (8.5 kgf·m, 61 lbf·ft)

NOTE:

- Tighten the cylinder head bolt/washers in a crisscross pattern in 2 or 3 steps.

Install and tighten the 6 mm bolts [2] securely.

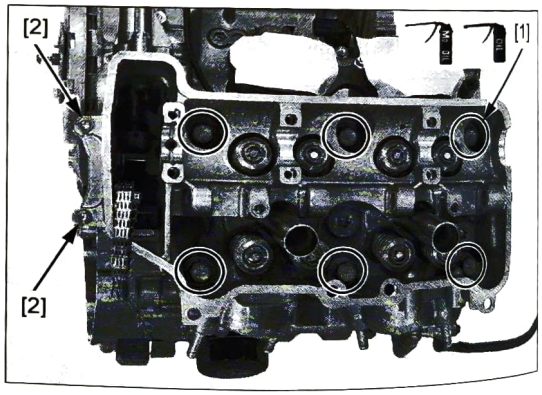

Install the following:

- Camshaft (page 10-14)
- Primary drive gear (DCT type) (page 13-52)
- Right crankcase cover (MT type) (page 12-7)
- Thermostat (page 8-6)
- Throttle body (page 7-11)
- Exhaust pipe (page 2-17)

INSULATOR

REMOVAL/INSTALLATION

Remove the throttle body (page 7-11).

Remove the insulator mounting bolts [1] and insulator [2].

Remove the O-rings [3] from the insulator.

Installation is in the reverse order of removal.

TORQUE:

Insulator mounting bolt:
12 N·m (1.2 kgf·m, 9 lbf·ft)

NOTE:

- Replace O-rings with new ones.
- Apply engine oil to new O-rings.

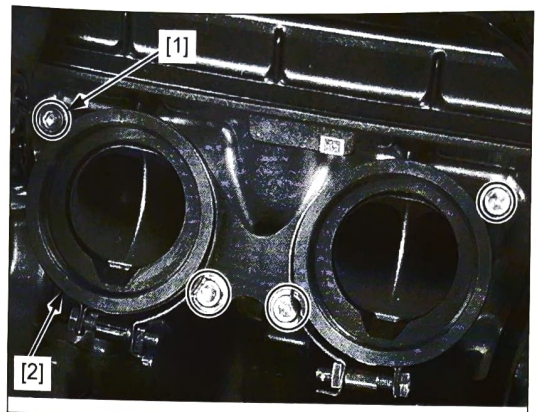

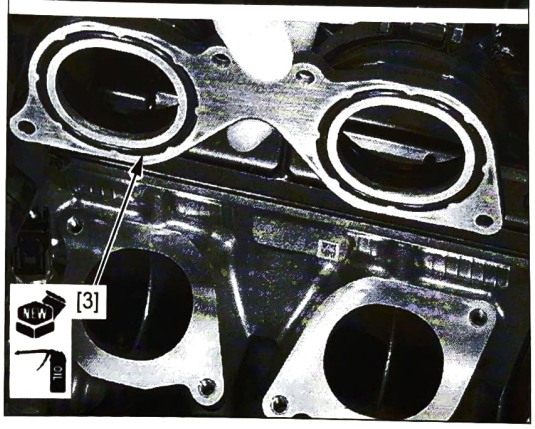

MEMO

11. ALTERNATOR/STARTER CLUTCH

SERVICE INFORMATION 11-2

TROUBLESHOOTING 11-2

COMPONENT LOCATION 11-3

ALTERNATOR COVER 11-4

STATOR 11-6

FLYWHEEL 11-6

STARTER CLUTCH 11-9

SERVICE INFORMATION

GENERAL

- This section covers service of the alternator and starter clutch. All service can be done with the engine installed in the frame.
- For alternator inspection (page 21-7)
- For CKP sensor inspection (page 5-8)
- For starter motor service (page 6-7)

TOOLS

Flywheel holder 07725-0040001 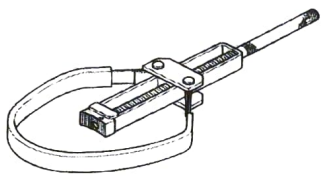	Rotor puller 07733-0020001 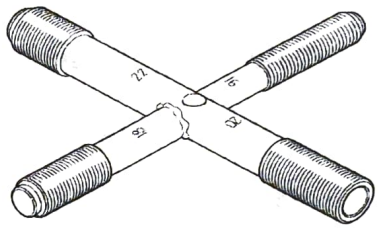 or 07933-3000001 (U.S.A. only)

TROUBLESHOOTING

Starter motor turns, but engine does not turn

- Faulty starter clutch
- Damaged starter reduction gear/shaft
- Damaged or faulty starter motor pinion gear
- Damaged starter driven gear

COMPONENT LOCATION

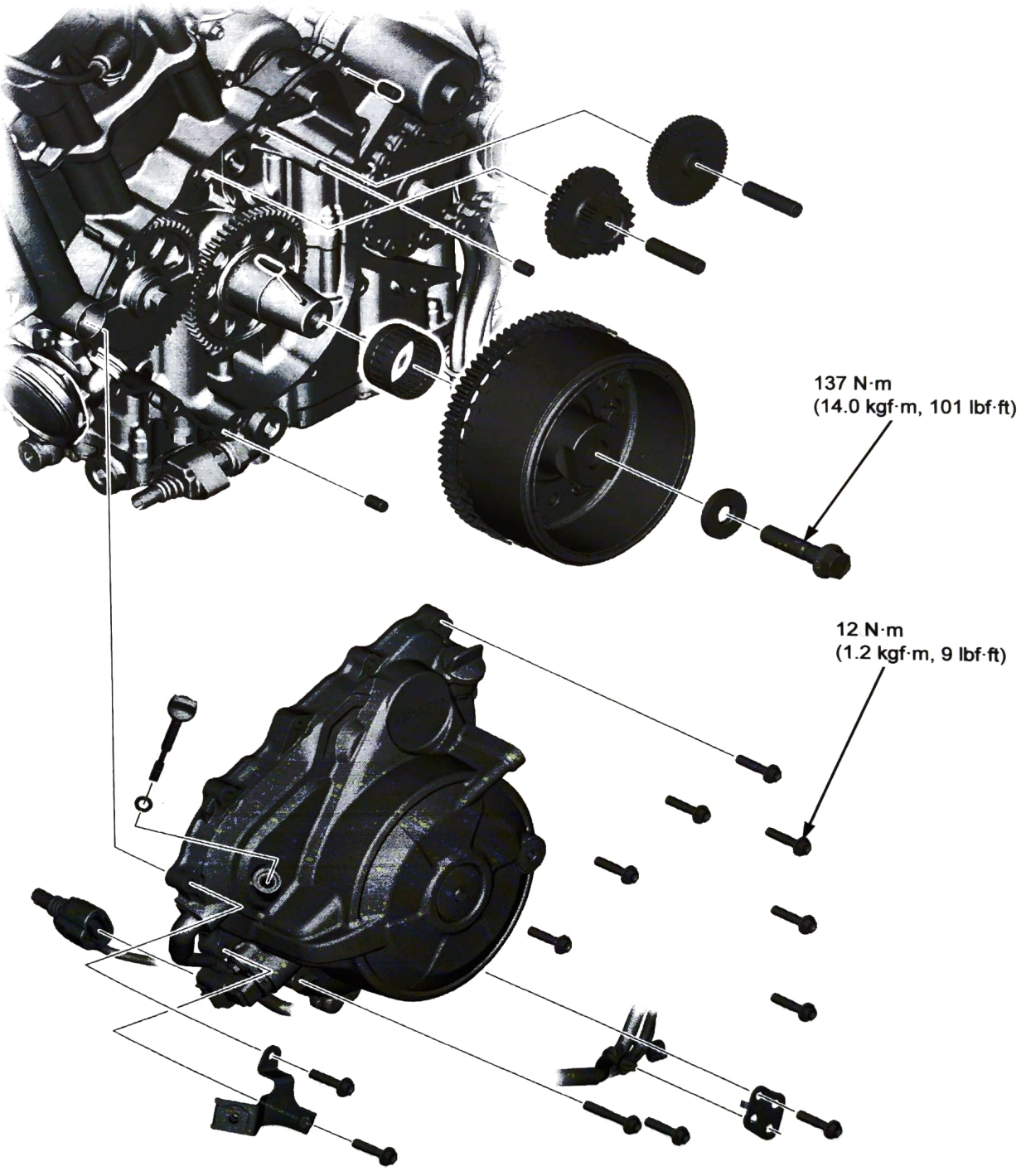

ALTERNATOR COVER

REMOVAL/INSTALLATION

Drain the engine oil (page 3-13).

Remove the following:

- drive sprocket cover (page 2-9)
- left engine cover (page 2-11)

MT type: Remove the gearshift spindle cover (page 12-20).

DCT type: Remove the shift control motor cover (page 13-52).

Disconnect the alternator 3P (Gray) connector [1].

Remove the clip [2].

Release the alternator wire from the guide.

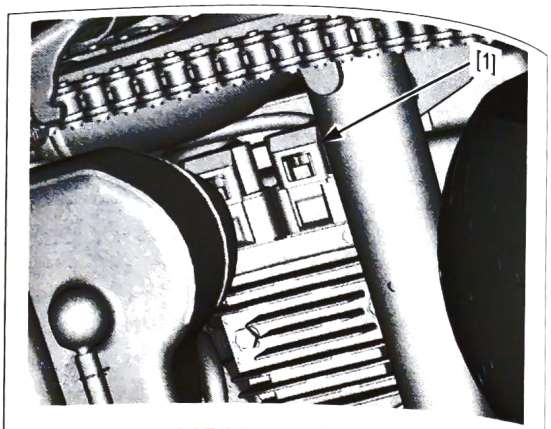

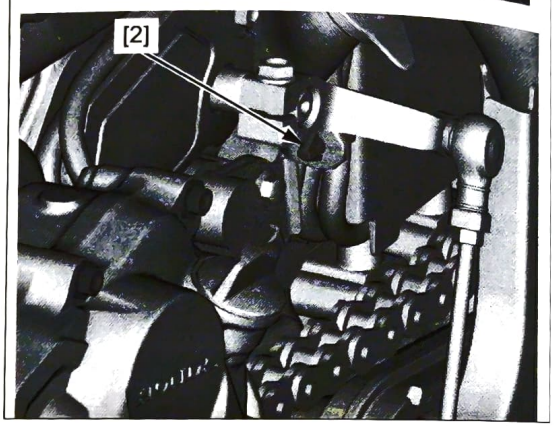

MT type: Release the alternator wire [1] from the clamp [2].

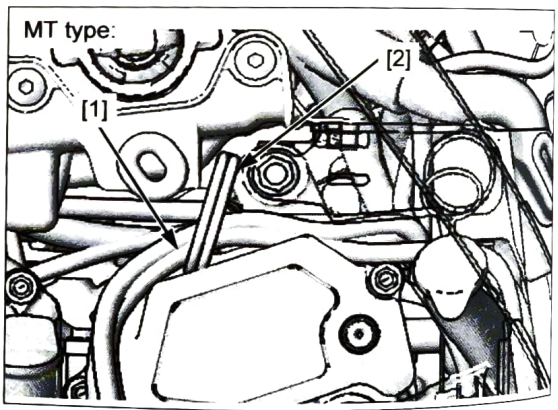

Disconnect the CKP sensor 3P (Gray) connector [1].

Remove the two bolts [2] and the two stays [3].

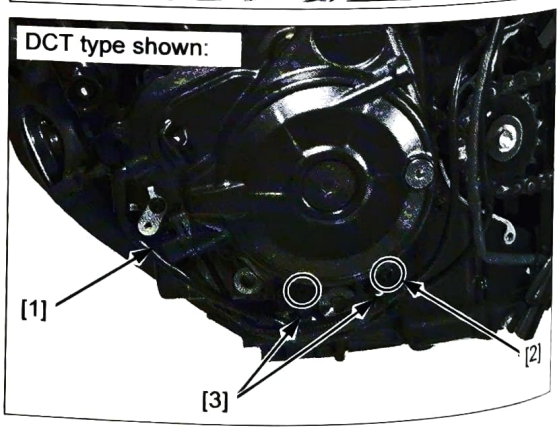

Remove the following:

- Dipstick [1]
- Alternator cover bolt (long) [2]
- Alternator cover bolts (short) [3]

NOTE:

- Loosen the bolts in a crisscross pattern in 2 or 3 steps.

Remove the alternator cover [4].

NOTE:

- The alternator cover (stator) is magnetically attracted to the flywheel, be careful during removal and installation.

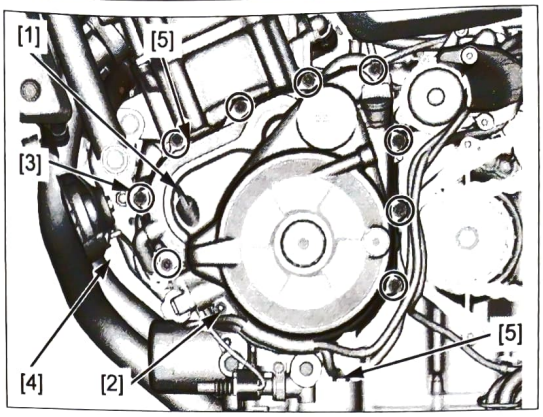

Remove the dowel pins [1] and oil orifice [2].

Clean off any sealant from the alternator cover mating surfaces.

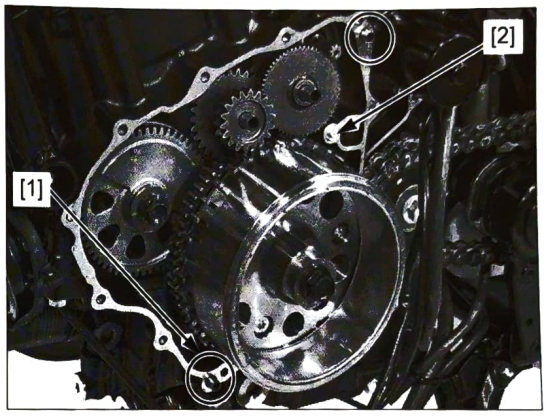

Installation is in the reverse order of removal.

TORQUE:

Alternator cover bolt:

12 N·m (1.2 kgf·m, 9 lbf·ft)

NOTE:

- Apply liquid sealant (TB1207B manufactured by ThreeBond or equivalent) to the alternator cover mating surface as shown.
- Do not apply more liquid sealant than necessary.
- Install the oil orifice with the narrow hole side facing out.
- Route the wires properly (page 1-27).

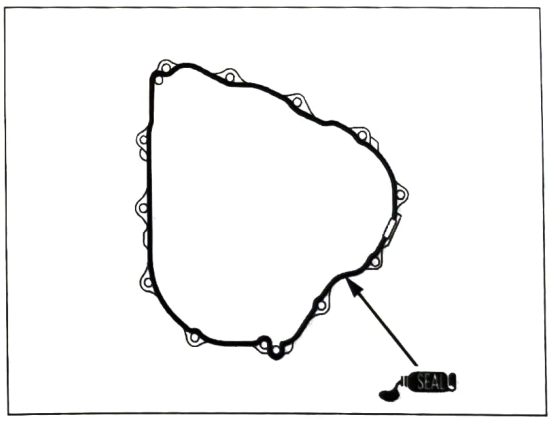

Fill the engine with the recommended engine oil and check that there are no oil leaks (page 3-12).

STATOR

REMOVAL/INSTALLATION

Remove the alternator cover (page 11-4).

Release the wire grommet [1] from the alternator cover groove.

Remove the alternator wire clamper bolt [2] and alternator wire clamper [3].

Remove the stator bolt [4] and stator [5].

Installation is in the reverse order of removal.

TORQUE:
Stator bolt:
12 N·m (1.2 kgf·m, 9 lbf·ft)

NOTE:

- Apply locking agent to the stator bolt threads.
- Apply liquid sealant (TB1207B manufactured by ThreeBond or equivalent) to the wire grommet as shown.
- Route the wires properly (page 1-27).

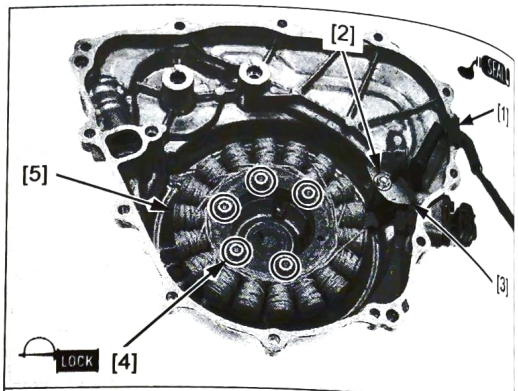

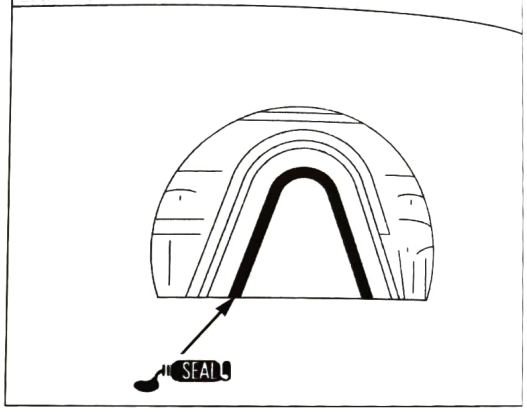

FLYWHEEL

REMOVAL

Remove the alternator cover (page 11-4).

NOTE:

- Be careful not to damage the crank pulser plate [1] when servicing the flywheel.

Remove the starter reduction gear shaft [2] and starter reduction gear B [3].

Remove the starter reduction gear shaft [4] and starter reduction gear A [5].

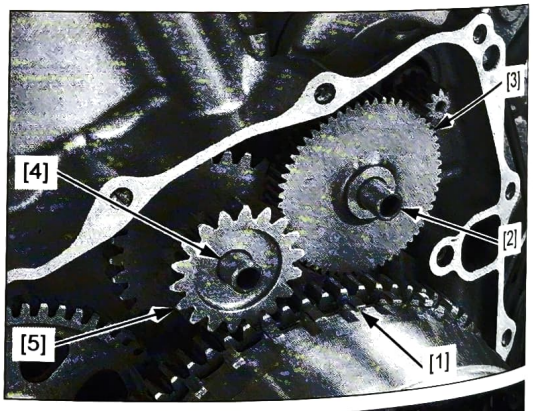

Hold the flywheel [1] using the special tool and loosen the flywheel mounting bolt [2].

TOOL:
Flywheel holder [3] **07725-0040001**

Remove the flywheel mounting bolt and washer [4].

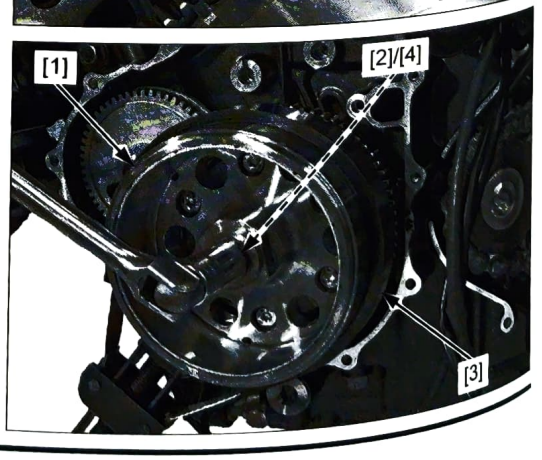

Remove the flywheel [1] using the special tool.

TOOL:
Rotor puller [2] **07733-0020001 or 07933-3000001 (U.S.A. only)**

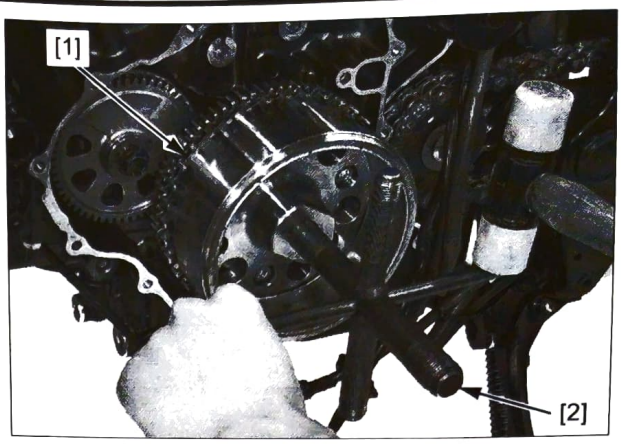

Remove the needle bearing [1].

Remove the woodruff key [2].

NOTE:
- Be careful not to damage the key groove and crankshaft.

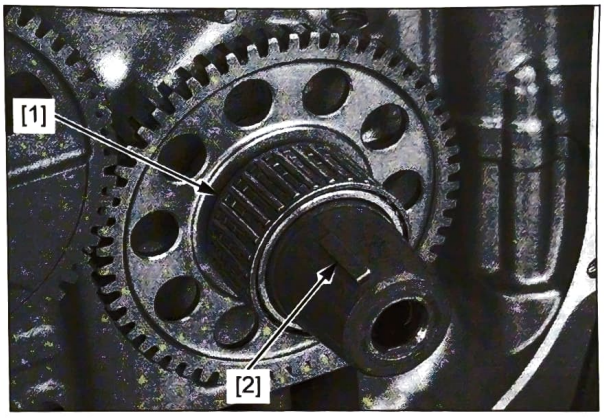

DISASSEMBLY/ASSEMBLY

Remove the starter driven gear (page 11-9).

Hold the flywheel [1] using the special tool.

TOOL:
Flywheel holder [2] **07725-0040001**

Remove the crank pulser plate bolts [3] and crank pulser plate [4].

Assembly is in the reverse order of disassembly.

NOTE:
- Be careful not to damage the crank pulser plate.
- Align the crank pulser plate tab with the flywheel groove.
- Apply locking agent to the crank pulser plate bolt threads (page 1-21).

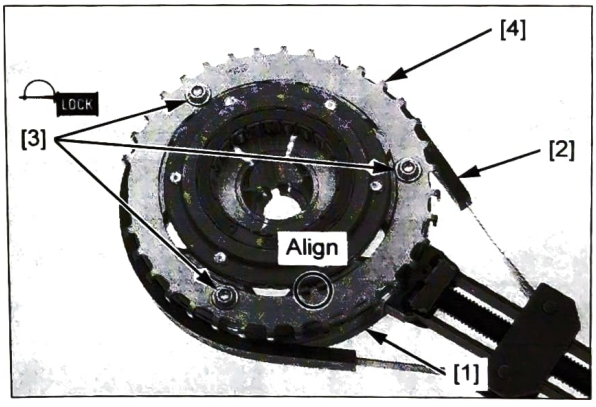

INSPECTION

Inspect the following parts for scratches, damage, abnormal wear, or deformation.

- Starter reduction gear shaft
- Starter reduction gear
- Woodruff key
- Needle bearing
- Crank pulser plate

Replace if necessary.

INSTALLATION

Install the woodruff key [1].

NOTE:

- Be careful not to damage the key groove and crankshaft.

Apply engine oil to the needle bearing rotating area.

Install the needle bearing [2].

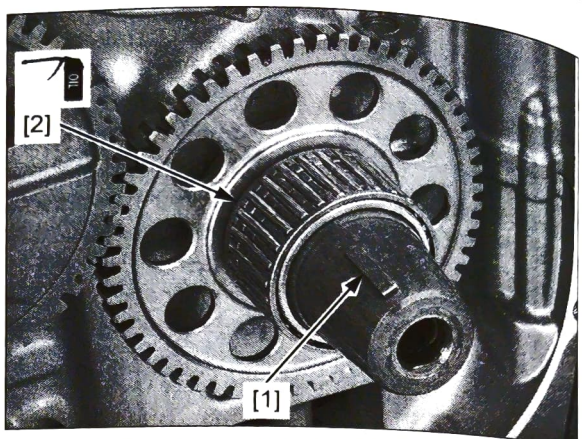

Clean any oil from the crankshaft and flywheel tapered areas thoroughly.
Install the flywheel [1] to the crankshaft.

NOTE:

- Be careful not to damage the crank pulser plate [2] when servicing the flywheel.
- Align the woodruff key with flywheel keyway.

Apply engine oil to the flywheel mounting bolt threads and seating surface.
Install the washer [3] and flywheel mounting bolt [4].

Hold the flywheel using the special tool and tighten the flywheel mounting bolt to the specified torque.

TOOL:

Flywheel holder [5] **07725-0040001**

TORQUE: 137 N·m (14.0 kgf·m, 101 lbf·ft)

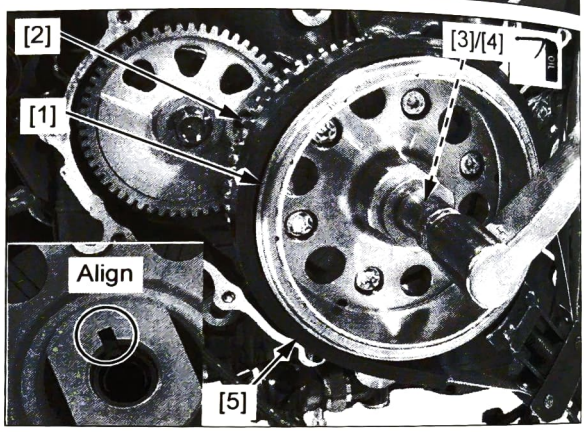

Apply molybdenum oil solution to the starter reduction gear shafts outer surfaces.

Install the starter reduction gear A [1] and shaft [2].

Install the starter reduction gear B [3] and shaft [4].

Install the alternator cover (page 11-4).

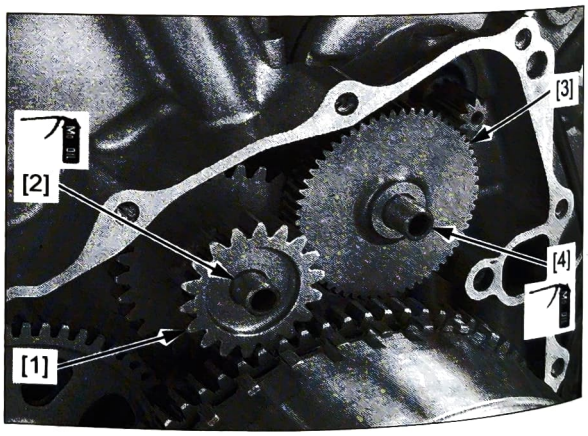

STARTER CLUTCH

REMOVAL

NOTE:

- Be careful not to damage the crank pulser plate when servicing the starter clutch.

Remove the flywheel (page 11-6).

Make sure that the starter driven gear [1] turns counterclockwise smoothly and does not turn clockwise.

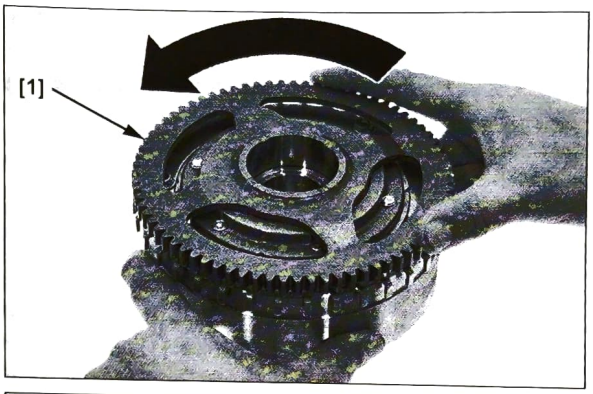

Remove the starter driven gear while turning the starter driven gear counterclockwise.

Hold the flywheel [1] using the below special tool.

TOOL:

Flywheel holder [2] **07725-0040001**

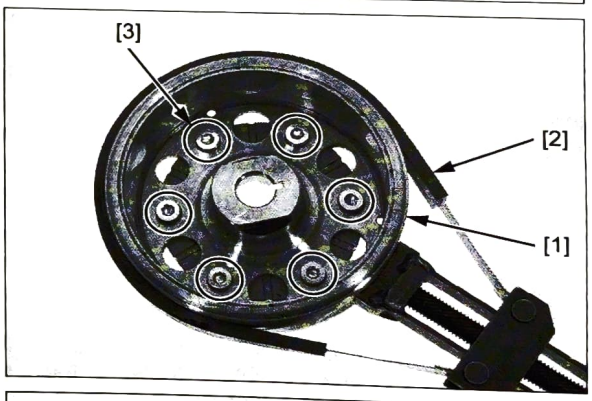

Remove the starter clutch torx bolts [3].

Remove the starter clutch assembly [1].

Remove the starter one-way clutch [2] from the starter clutch outer [3].

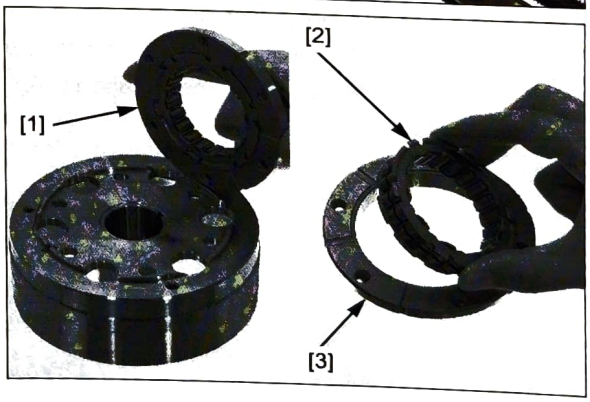

INSPECTION

Inspect the following parts for scratches, damage, abnormal wear, or deformation.

- Starter driven gear
- Starter clutch outer
- Starter one-way clutch

Measure each part according to ALTERNATOR/ STARTER CLUTCH SPECIFICATIONS (page 1-7).

Replace any part if it is out of service limit.

INSTALLATION

NOTE:

- Be careful not to damage the crank pulser plate when the starter clutch servicing.

Apply engine oil to the starter one-way clutch sliding surface.

Install the starter one-way clutch [1] to the starter clutch outer [2].

Install the starter clutch assembly [3].

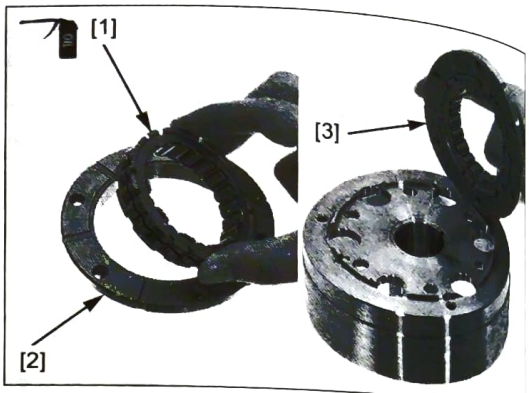

Hold the flywheel [1] using the below special tool.

TOOL:

Flywheel holder [2] **07725-0040001**

Apply locking agent to the starter clutch torx bolt threads (page 1-21).

Install and tighten the starter clutch torx bolts [3] to the specified torque.

TORQUE: 29 N·m (3.0 kgf·m, 21 lbf·ft)

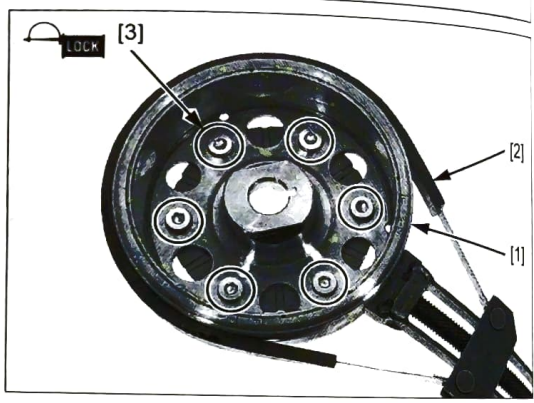

Install the starter driven gear [1] into the starter clutch outer while turning the starter driven gear counterclockwise.

Recheck the one-way clutch operation (page 11-9).

Install the flywheel (page 11-8).

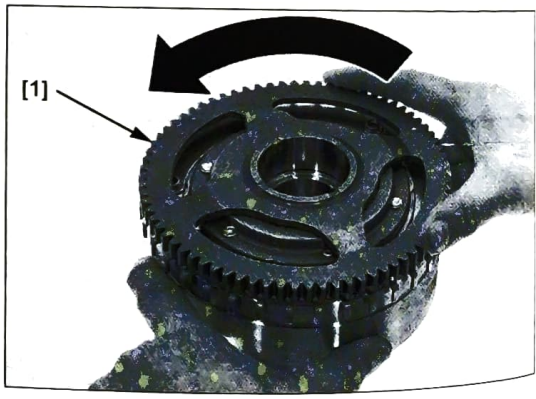

12. CLUTCH/GEARSHIFT LINKAGE (MT type)

SERVICE INFORMATION 12-2

TROUBLESHOOTING 12-3

COMPONENT LOCATION 12-4

RIGHT CRANKCASE COVER 12-5

CLUTCH 12-9

PRIMARY DRIVE GEAR 12-18

GEARSHIFT LINKAGE 12-20

GEARSHIFT ARM/
GEARSHIFT PEDAL 12-23

CLUTCH LEVER 12-25

SERVICE INFORMATION

GENERAL

- This section covers service of the clutch and gearshift linkage. All service can be done with the engine installed in the frame.
- Engine oil viscosity and level have an effect on clutch disengagement. When the clutch does not disengage or the motorcycle creeps with clutch disengaged, inspect the engine oil level before servicing the clutch system.

TOOLS

Clutch center holder 07724-0050002 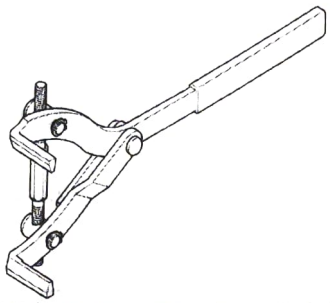 or equivalent commercially available in U.S.A.	Driver 07749-0010000 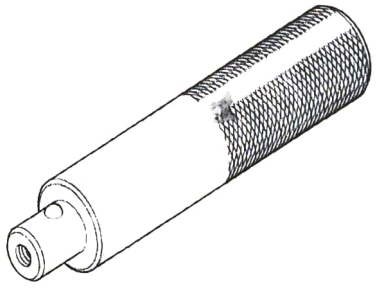	Attachment, 28 x 30 mm 07946-1870100 
Pilot, 17 mm 07746-0040400 	Attachment, 42 mm 07QAD-P0A0100 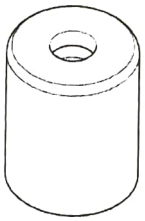	Attachment, 42 x 47 mm 07746-0010300 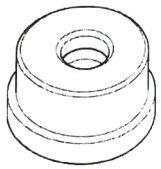
Pilot, 35 mm 07746-0040800 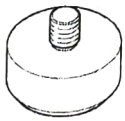	Gear holder, 2.5 07724-0010100 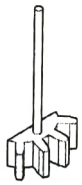 or 07724-001A100 (U.S.A. only)	

TROUBLESHOOTING

Clutch lever is too hard to pull in
- Damaged, kinked or dirty clutch cable
- Improperly routed clutch cable
- Damaged clutch lifter mechanism
- Faulty clutch lifter bearing
- Clutch lifter pin installed improperly

Clutch slips when accelerating
- Clutch lifter sticking
- Worn clutch friction discs
- Weak clutch springs
- No clutch lever freeplay
- Engine oil mixed with molybdenum or graphite additive

Clutch will not disengage or motorcycle creeps with clutch disengaged
- Excessive clutch lever freeplay (page 3-24)
- Clutch plate warped
- Engine oil level too high, improper engine oil viscosity or additive used
- Loose clutch center lock nut
- Damaged clutch lifter mechanism
- Clutch lifter pin installed improperly
- Worn clutch outer slot and clutch center grooves
- Improper clutch operation

Hard to shift
- Incorrect clutch cable adjustment
- Improper clutch operation
- Improper engine oil viscosity
- Damaged or bent shift forks (page 14-14)
- Bent shift fork shaft (page 14-14)
- Bent shift fork claw (page 14-14)
- Loose shift drum center bolt
- Damaged shift drum center
- Damaged shift drum guide grooves (page 14-14)
- Damaged or bent gearshift spindle
- Damaged clutch cam

Transmission jumps out of gear
- Worn shift drum stopper arm
- Weak or broken shift drum stopper arm return spring
- Loose shift drum center bolt
- Damaged shift drum center
- Bent shift fork shaft (page 14-14)
- Damaged or bent shift forks (page 14-14)
- Worn gear engagement dogs or slots
  - Mainshaft (page 14-15)
  - Countershaft (page 14-14)

Gearshift pedal will not return
- Weak or broken gearshift spindle return spring
- Damaged or bent gearshift spindle

COMPONENT LOCATION

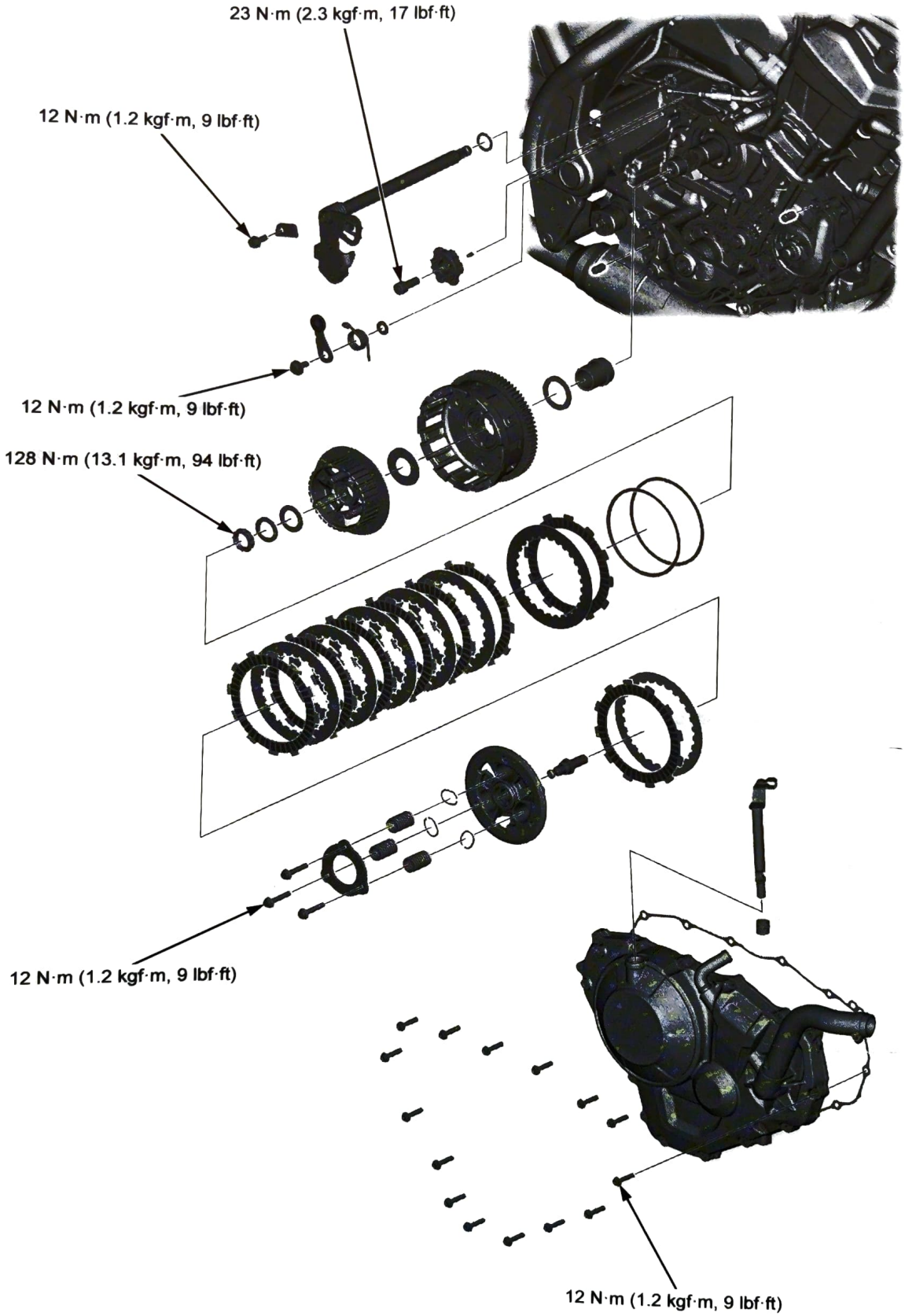

RIGHT CRANKCASE COVER

REMOVAL

Drain the engine oil (page 3-12).
Drain the coolant (page 3-15).

Remove the right rear engine cover (page 2-10).

Loosen the lock nut [1] and lower adjusting nut [2].

Disconnect the clutch cable [3] from the clutch lifter lever [4].

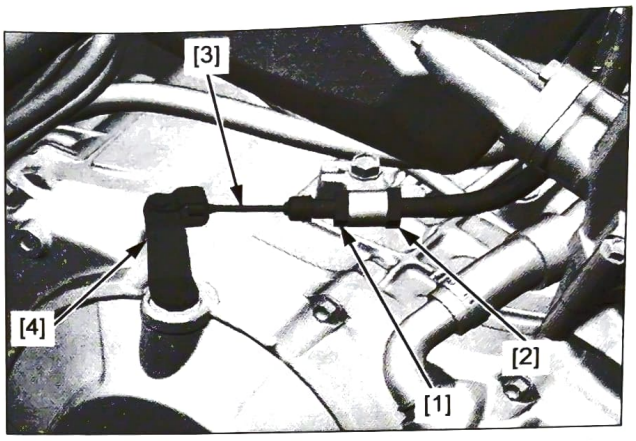

Cut off and remove the hose clamp [1].
Disconnect the bypass hose [2].

Loosen the hose band screw [3].
Disconnect the radiator hose B [4].

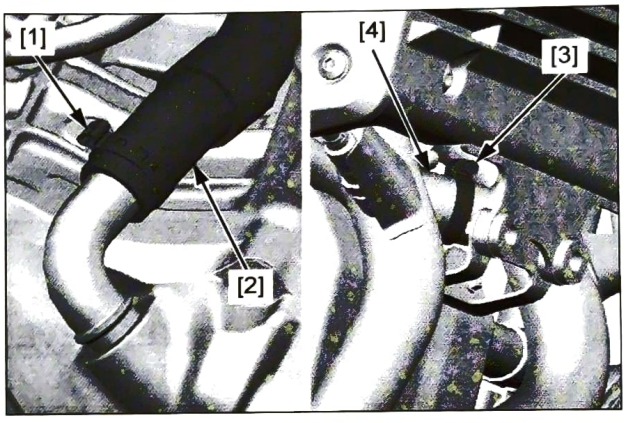

Remove the right crankcase cover bolts [1].

Turn the clutch lifter lever [2] counterclockwise to disengage the lifter lever slit from the clutch lifter pin.

Remove the right crankcase cover [3].

NOTE:

- Be careful not to drop the return spring [4].

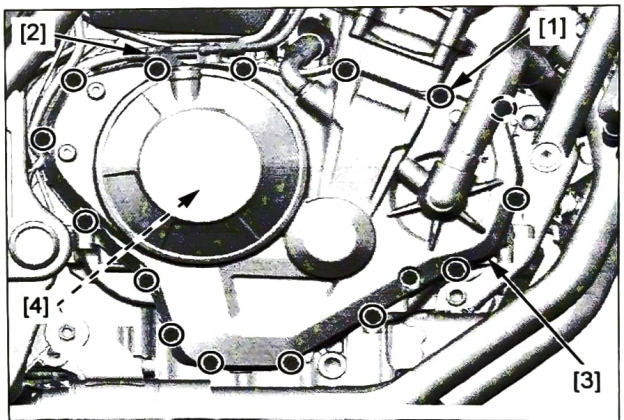



Remove the dowel pins [1] and gasket [2].

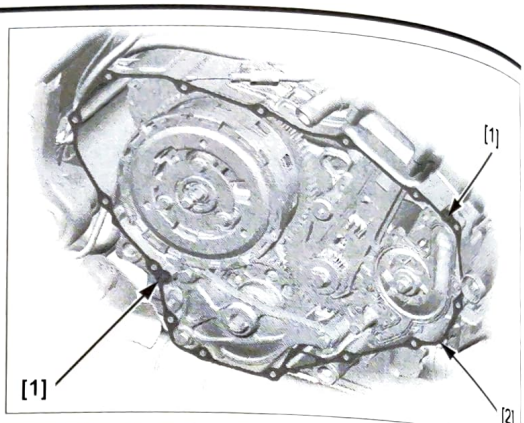

Remove the O-ring [1].

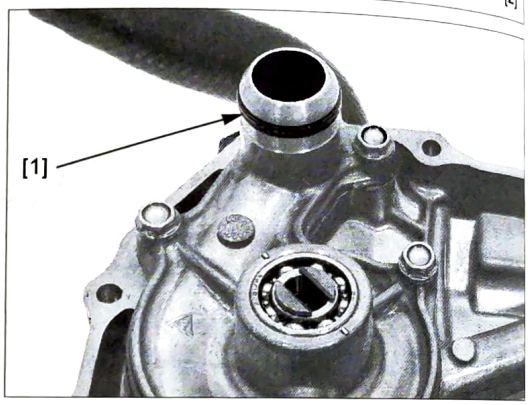

CLUTCH LIFTER LEVER

REMOVAL/INSTALLATION

Remove the right crankcase cover (page 12-5).

Remove the clutch lifter lever [1] and return spring [2].

Installation is in the reverse order or removal.

NOTE:

- Align the return spring end with the clutch lifter lever groove.
- Hook the return spring end to the right crankcase cover groove.

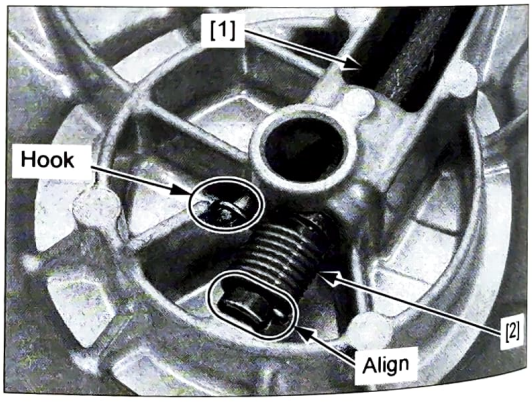

OIL SEAL/BEARING REPLACEMENT

Remove the clutch lifter lever (page 12-6).

Remove the oil seal [1].

Check the needle bearings [2] and replace if necessary.

Installation is in the reverse order of removal.

NOTE:

- Coat new bearings with engine oil and install them to the specified depth as shown.
- Replace the oil seal with a new one and install it to the specified depth as shown.
- Apply grease to new oil seal lips.

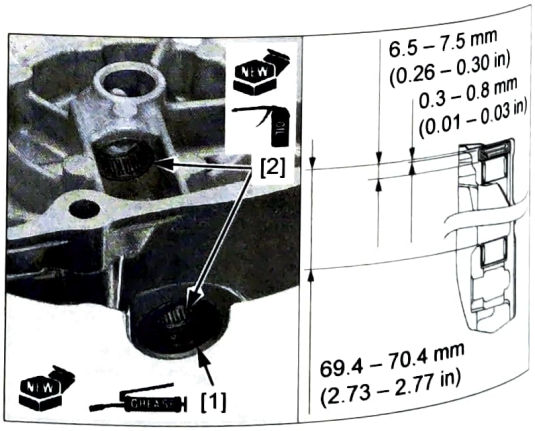

INSPECTION

Inspect the following parts for scratches, damage, abnormal wear and deformation. Replace if necessary.

- Clutch lifter lever
- Return spring

INSTALLATION

Clean the right crankcase cover mating surfaces thoroughly.

Apply liquid sealant (TB1207B manufactured by Three Bond or equivalent) to the right crankcase cover mating surface as shown.

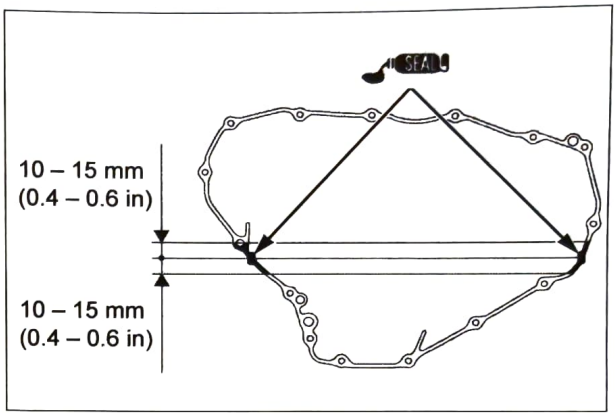

Coat a new O-ring [1] with engine oil and install it onto the groove of the water pump cover.

Align the water pump shaft slit with the water pump cover index lines by rotating the water pump shaft.

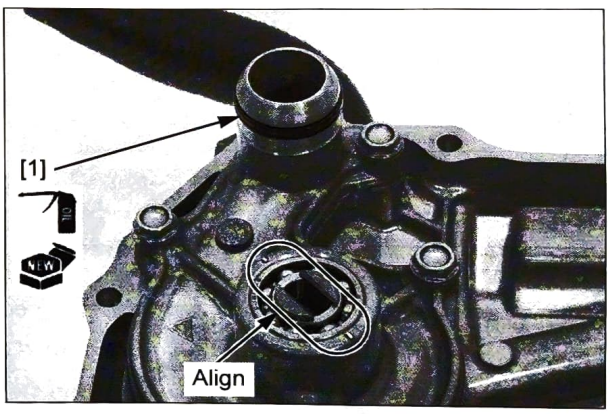

Align the following by rotating the crankshaft:

- Primary drive gear index line [1]
- Crankcase "▽" mark [2]

Make sure that the front balancer shaft end [3] is in position as shown.

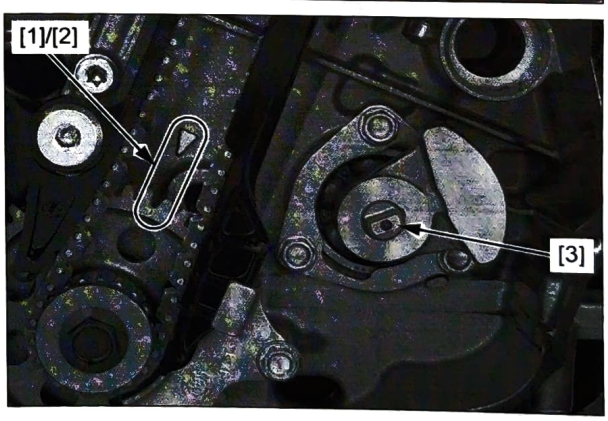

Install the dowel pins [1] and a new gasket [2].

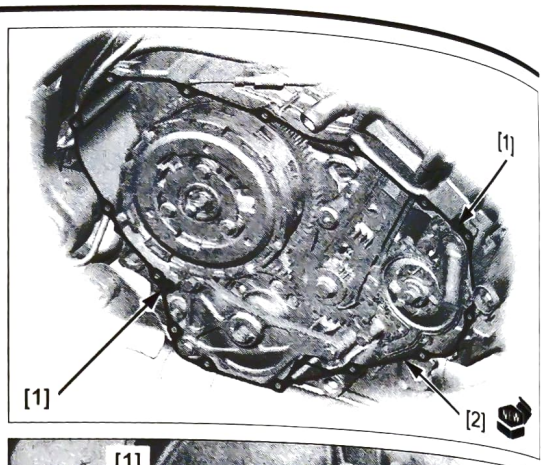

Turn the clutch lifter lever [1] clockwise so that the lever slit [2] is in position as shown.

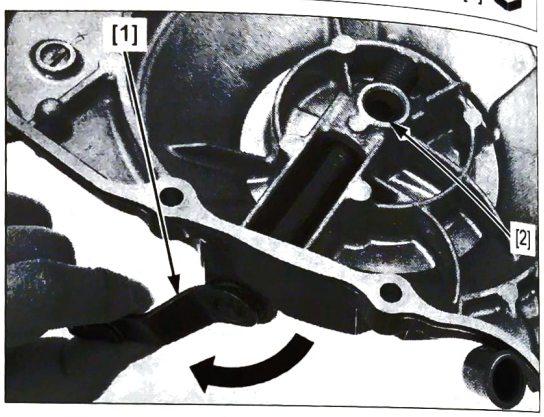

Install the right crankcase cover [1] by holding the clutch lifter lever [2].

Install the right crankcase cover bolts [3].

Tighten the right crankcase cover bolts in a crisscross pattern in 2 or 3 steps to the specified torque.

TORQUE: 12 N·m (1.2 kgf·m, 9 lbf·ft)

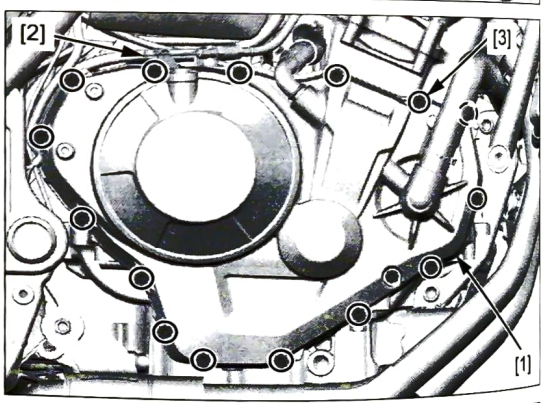

Connect the radiator hose B [1].

Tighten the hose band screw [2] to the specified range (page 8-7).

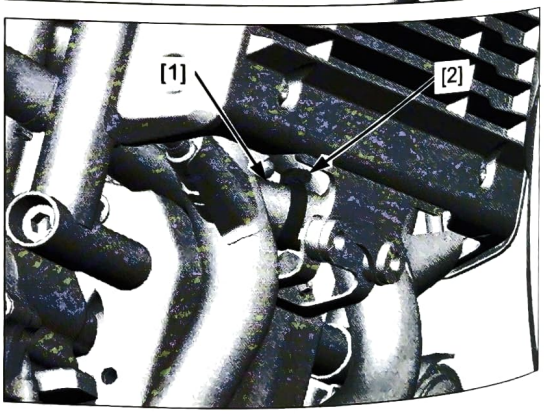

Install a new hose clamp [1] onto the bypass hose [2].

Connect the bypass hose to the hose joint [3].

Pinch the ear portion of the hose clamp with below special tool (Pincher [4]) until the pinched area clearance is to the dimension as shown.

TOOL:
Pincher **Oetiker 1098 or equivalent**

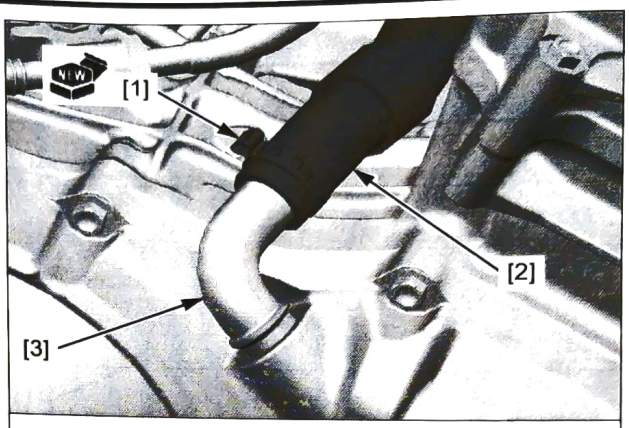

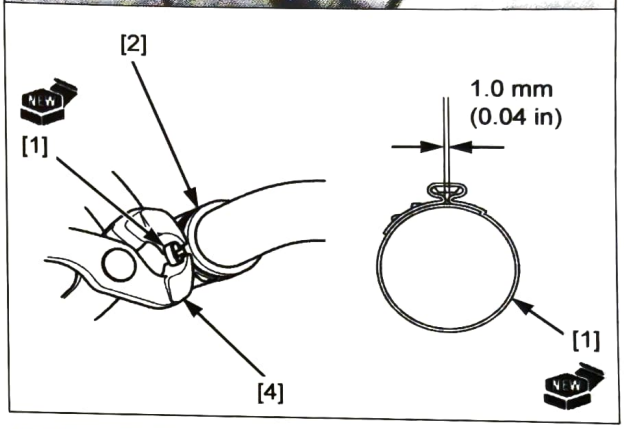

Connect the clutch cable [1] to the clutch lifter lever [2].

Install the right rear engine cover (page 2-10).

Fill the engine with the recommended engine oil and check that there are no oil leaks (page 3-12).
Fill the recommended coolant mixture to the filler neck and bleed the air (page 8-5).
Adjust the clutch cable freeplay (page 3-24).

TORQUE:
Clutch cable lock nut:
8.5 N·m (0.9 kgf·m, 6.3 lbf·ft)

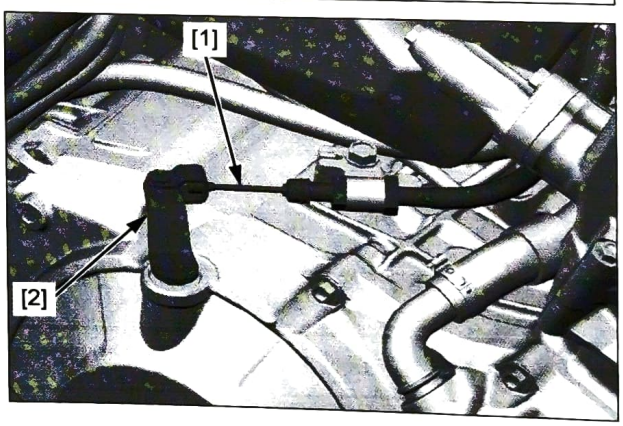

CLUTCH

REMOVAL

Remove the right crankcase cover (page 12-5).

Loosen the clutch set plate bolts [1] in a crisscross pattern in 2 or 3 steps.

Remove the clutch set plate bolts, set plate [2], and clutch springs [3].

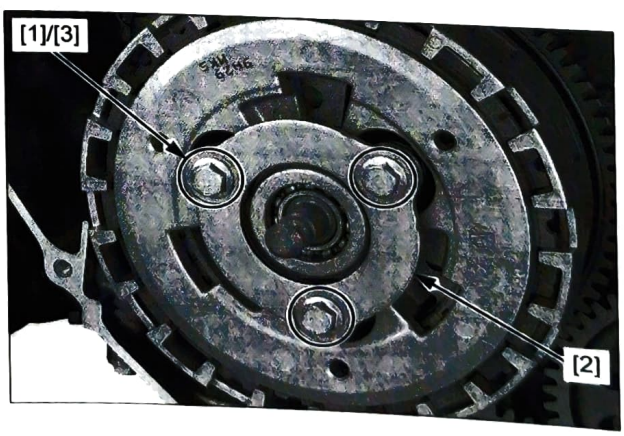

Remove the following:

- Clutch pressure plate [1]
- Clutch lifter pin [2]
- Clutch friction discs C [3]
- Clutch plate C [4]
- Clutch friction discs B [5] (6 pcs)
- Clutch plates [6] (5 pcs)
- Clutch plate B [7]
- Judder spring [8]
- Judder spring seats [9]

Remove the clutch spring seats [10] from the clutch pressure plate.

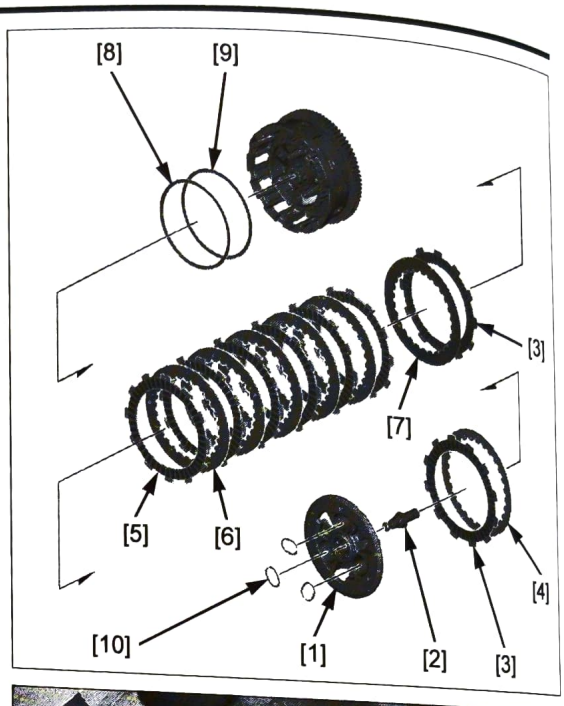

NOTE:

- When removing the clutch friction discs and clutch plates, note the number of them.

Unstake the clutch center lock nut [1].

NOTE:

- Be careful not to damage the mainshaft threads.

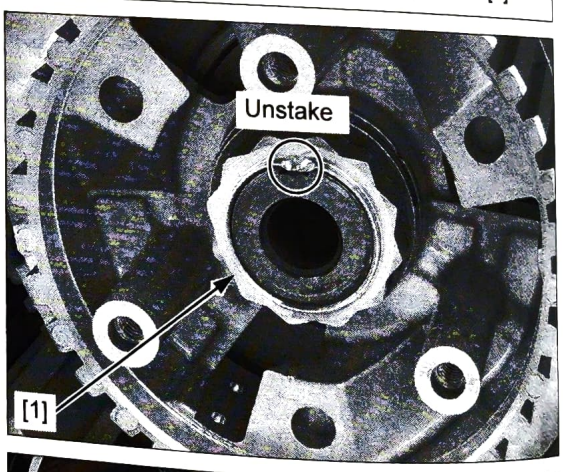

Install below special tool.

TOOL:

Clutch center holder [1] **07724-0050002 or equivalent commercially available in U.S.A.**

Loosen the clutch center lock nut [2] while holding the clutch center with the special tool.

Remove the lock nut.

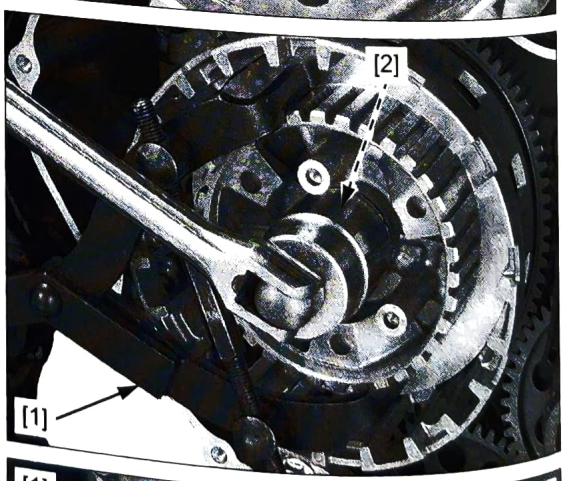

Remove the spring washer [1], thrust washer [2], and clutch center [3].

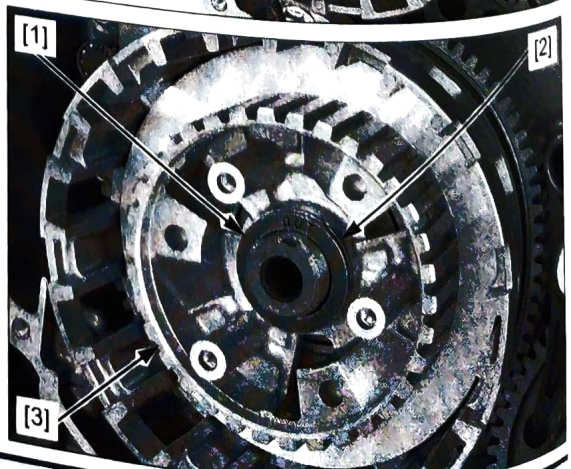

Remove the washer [1] and clutch outer [2].

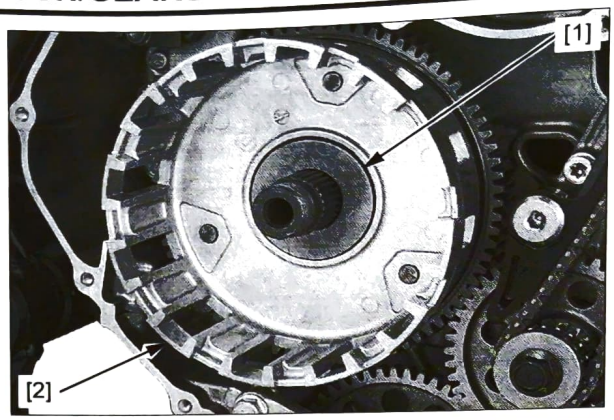

Remove the washer [1] and clutch outer guide [2].

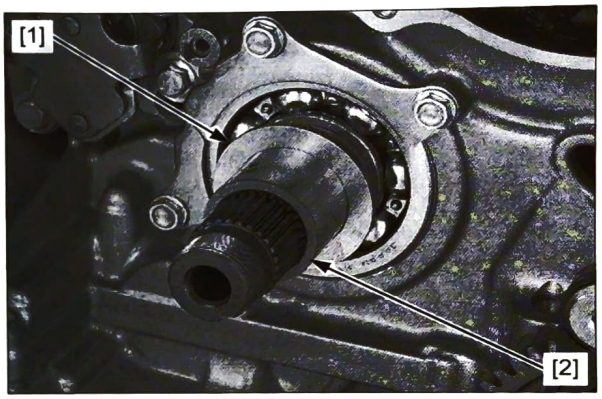

INSPECTION

Check the following for scratches, damage, abnormal wear and deformation:

- Clutch pressure plate cam areas [1]
- Clutch pressure plate grooves [2]
- Clutch pressure plate disc sliding surface [3]
- Clutch pressure plate bearing [4]

Replace the clutch pressure plate [5] if necessary.

For bearing replacement (page 12-12)

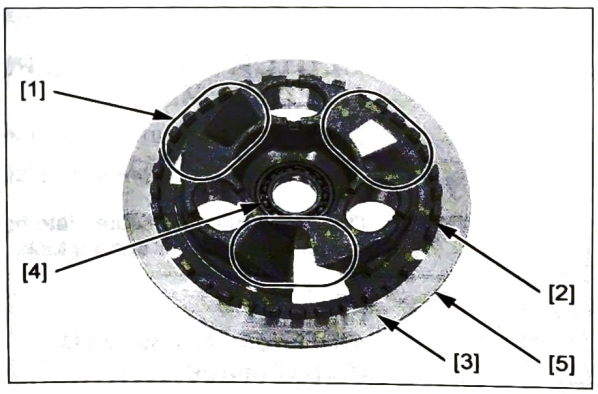

Check the following for scratches, damage, abnormal wear and deformation:

- Clutch center cam areas [1]
- Clutch center grooves [2]
- Clutch center disc sliding surface [3]

Replace the clutch center [4] if necessary.

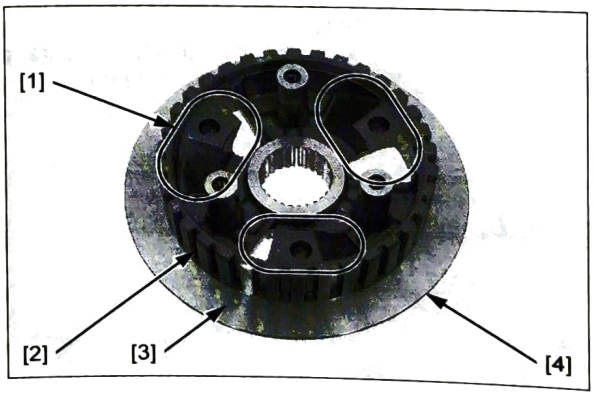

Check the following for scratches, damage, abnormal wear and deformation:

- Clutch outer grooves [1]
- Clutch outer needle bearing [2]
- Primary driven gear [3]

Replace the clutch outer [4] if necessary.

For needle bearing replacement (page 12-13)

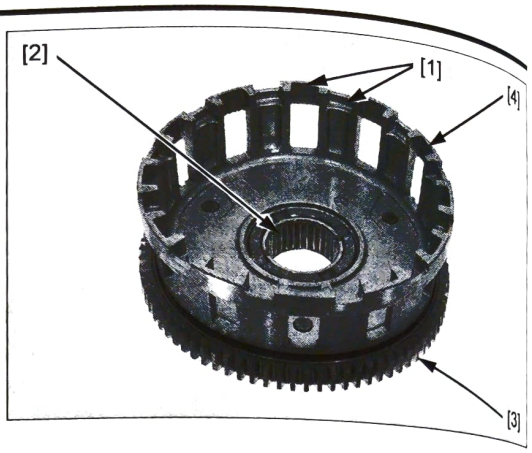

Inspect the following parts for scratches, damage, abnormal wear and deformation. Replace if necessary.

- Clutch springs
- Clutch spring seats
- Clutch lifter pin
- Clutch friction discs/plates
- Judder spring
- Judder spring seat
- Clutch outer guide

Measure each part according to CLUTCH/GEARSHIFT LINKAGE SPECIFICATIONS (MT type) (page 1-4).

Replace any part if it is out of service limit.

NOTE:

- Replace the clutch springs as a set.
- Replace the clutch friction discs and plates as a set.

CLUTCH PRESSURE PLATE BEARING REPLACEMENT

Drive clutch pressure plate bearing out.

Coat a new clutch pressure plate bearing with engine oil.
Drive the clutch pressure plate bearing [1] until it is fully seated using below special tools.

TOOLS:

Driver [2]	**07749-0010000**
Attachment, 28 x 30 mm [3]	**07946-1870100**
Pilot, 17 mm [4]	**07746-0040400**

NOTE:

- Install the clutch pressure plate bearing with its marked side facing up.

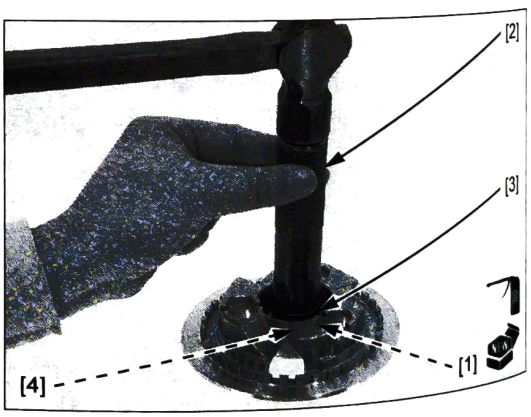

CLUTCH OUTER NEEDLE BEARING REPLACEMENT

Remove the clutch outer needle bearing [1] using the below special tools:

TOOLS:

Driver [2]	**07749-0010000**
Attachment, 42 mm [3]	**07QAD-P0A0100**

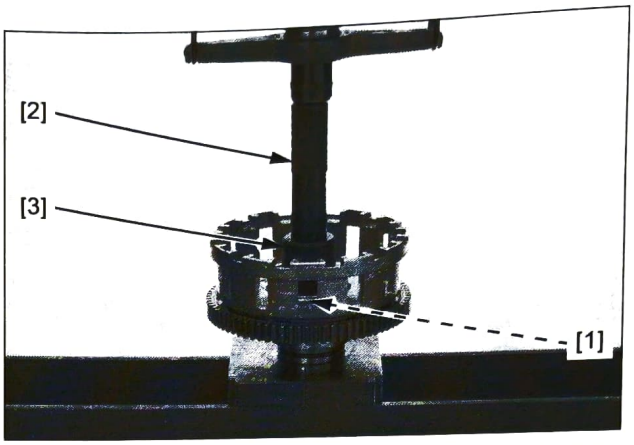

Coat a new clutch outer needle bearing with engine oil.

Install the clutch outer needle bearing [1] into the clutch outer to the specified range using the below special tools:

TOOLS:

Driver [2]	**07749-0010000**
Attachment, 42 x 47 mm [3]	**07746-0010300**
Pilot, 35 mm [4]	**07746-0040800**

NOTE:

- Install the clutch outer needle bearing with its marked side facing up.

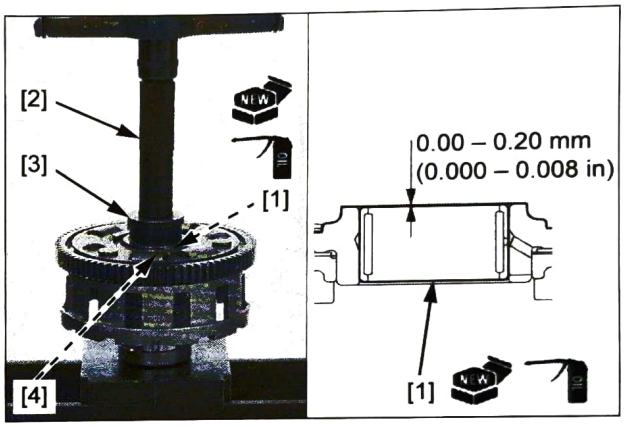

INSTALLATION

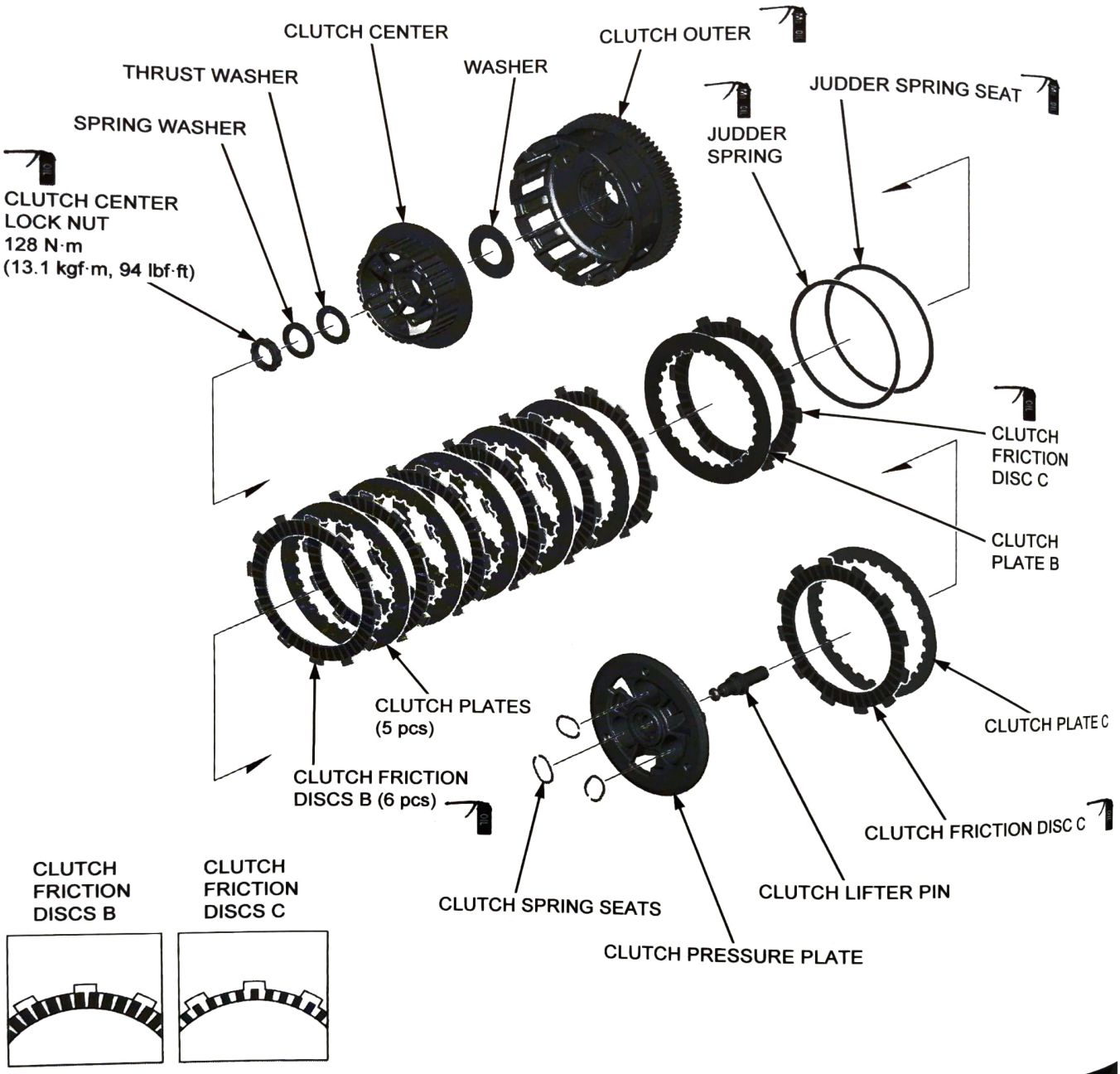

Apply molybdenum oil solution to the clutch outer guide entire surface.

Install the clutch outer guide [1] and washer [2].

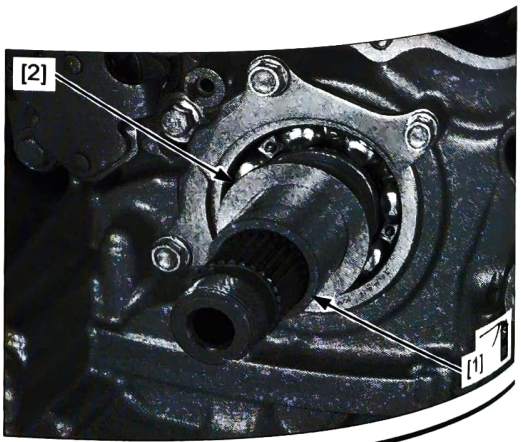

Apply engine oil to the clutch outer needle bearing.
Apply molybdenum oil solution to the primary driven gear teeth and clutch outer sliding area.

Install the clutch outer [1] and washer [2].

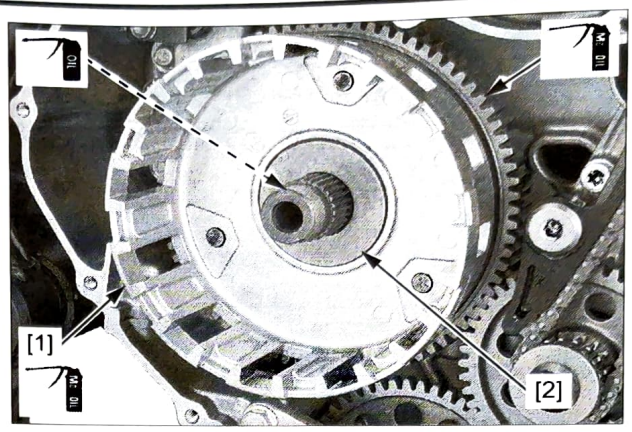

Install the clutch center [1], thrust washer [2], and spring washer [3].

NOTE:

- Install the spring washer with its "OUT" mark [4] facing out.

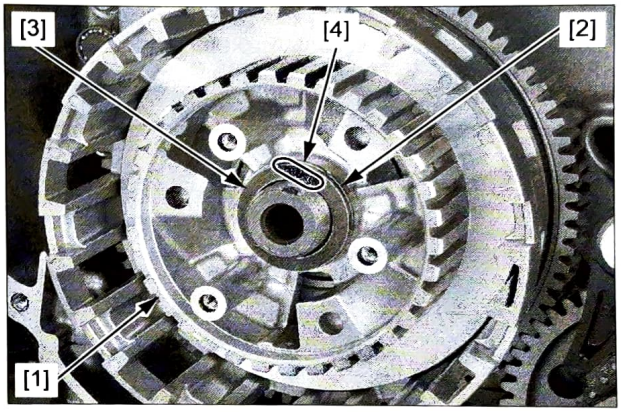

Apply engine oil to the new clutch center lock nut threads and seating surface.

Install the clutch center lock nut [1] onto the mainshaft.

Install below special tool.

TOOL:

Clutch center holder [2]	**07724-0050002 or equivalent commercially available in U.S.A.**

Tighten the clutch center lock nut to the specified torque by holding the clutch center with the special tool.

TORQUE: 128 N·m (13.1 kgf·m, 94 lbf·ft)

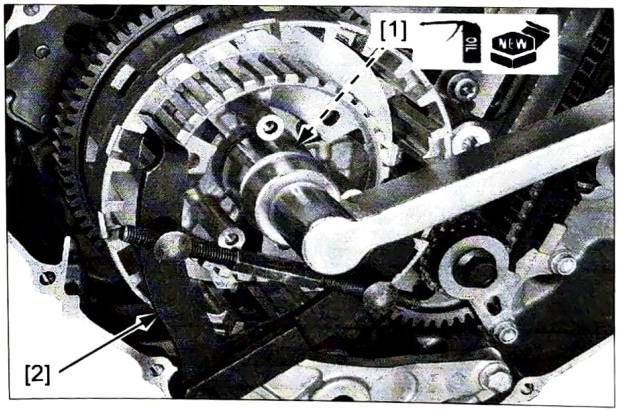

Stake the clutch center lock nut [1].

NOTE:

- Be careful not to damage the mainshaft threads.

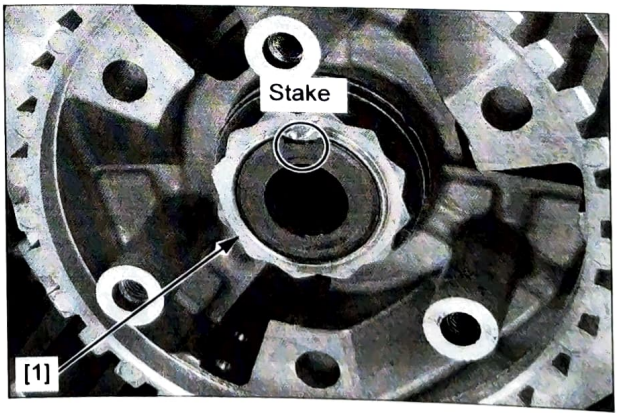

Apply molybdenum oil solution to the entire surface of the judder spring seat and judder spring.

Install the judder spring seat [1] and judder spring [2] onto the clutch center [3] as shown.

Apply engine oil to the entire surface of the clutch friction discs.

Install the clutch friction disc C [4] and clutch plate B [5] onto the clutch center.

Install the clutch friction discs B [6] (6 pcs) and clutch plates [7] (5 pcs) alternately, starting with the clutch friction discs B.

NOTE:

- The clutch friction disc C lining width is smaller than the clutch friction disc B.
- Clutch plate surface treatment is different from clutch plate B.

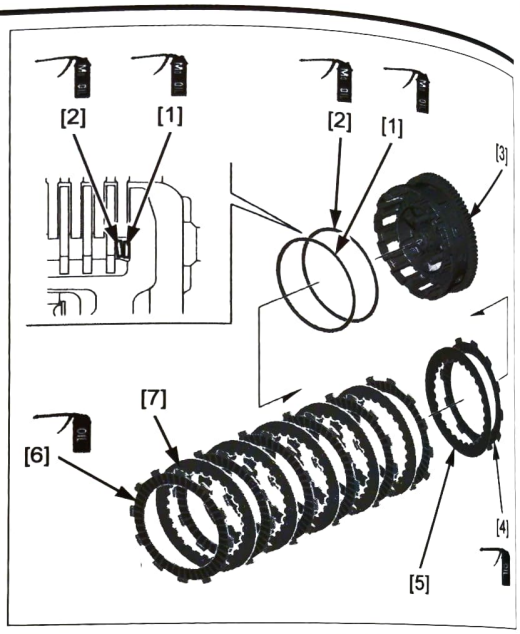

Install the spring seats [1] onto the clutch pressure plate [2] grooves.

NOTE:

- Make sure that the spring seats are fully seated in the pressure plate grooves.

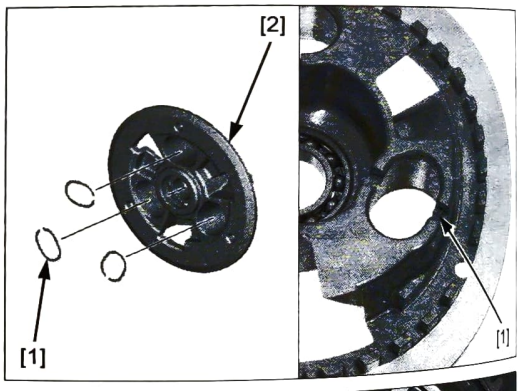

Install the clutch lifter pin [1].

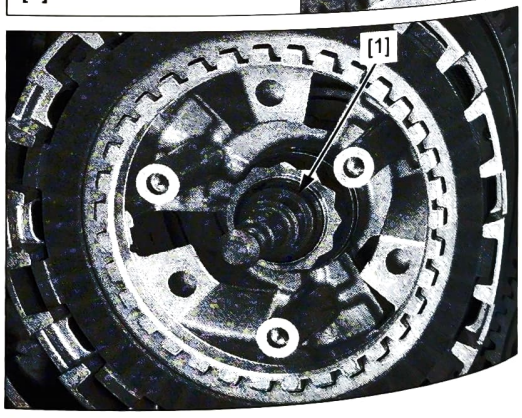

Apply engine oil to the entire surface of clutch friction disc C.

Install the clutch friction disc C [1] onto the clutch pressure plate [2].

Install the clutch plate C [3] onto the clutch friction disc C.

NOTE:

- Align the clutch plate C grooves with the clutch pressure plate lugs.

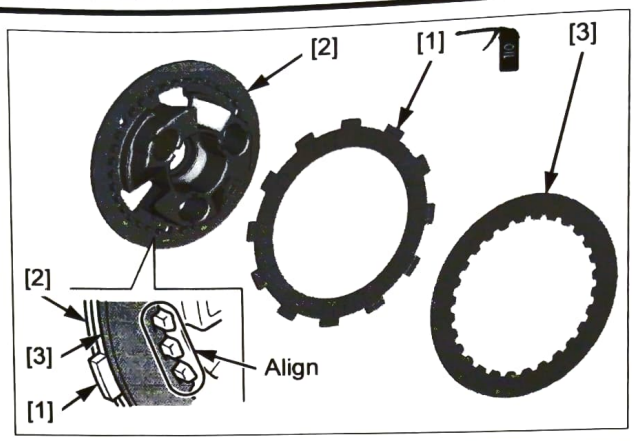

Install the clutch pressure plate assembly [1] by rotating counterclockwise.

NOTE:

- Install the clutch disc C tabs [2] into the shallow slots [3] of the clutch outer.

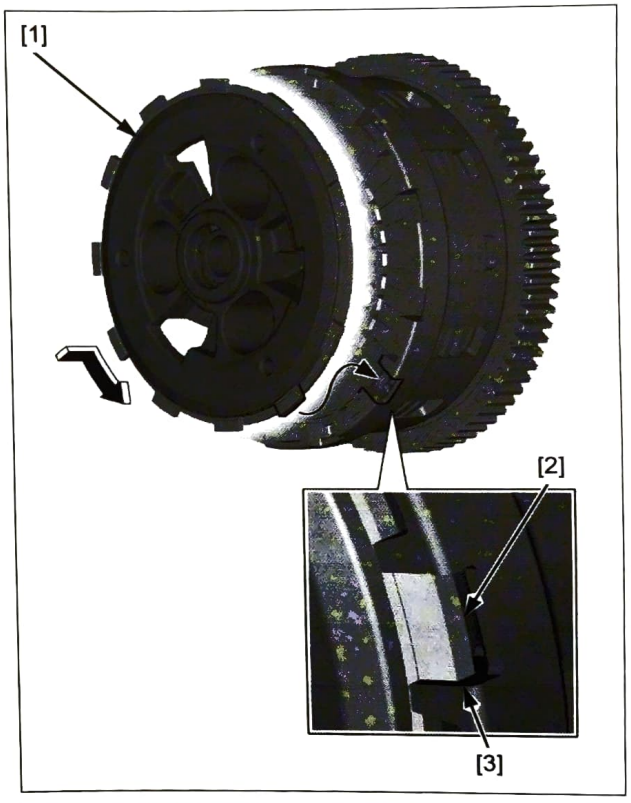

Install the clutch springs [1], clutch set plate [2] and clutch set plate bolts [3].

Tighten the clutch set plate bolts in a crisscross pattern in 2 or 3 steps to the specified torque.

TORQUE: 12 N·m (1.2 kgf·m, 9 lbf·ft)

Install the right crankcase cover (page 12-7).

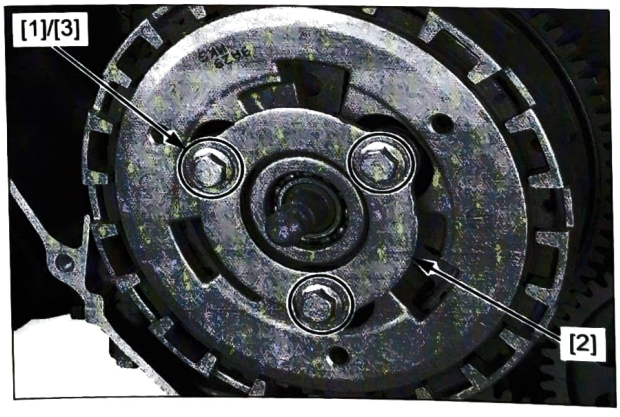

PRIMARY DRIVE GEAR

REMOVAL

Remove the cylinder head (page 10-17).

Remove the cam chain guide plate bolts [1], cam chain guide plate [2], and cam chain [3].

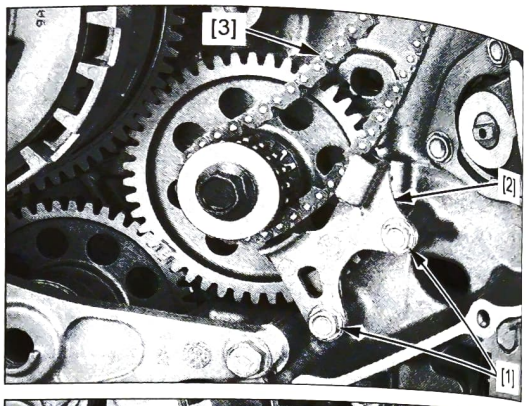

Install the below special tool between the primary drive and driven gears.

TOOL:

Gear holder, 2.5 [1]	**07724-0010100 or 07724-001A100 (U.S.A. only)**

Remove the primary drive gear bolt [2] and washer [3].

Remove the special tool.

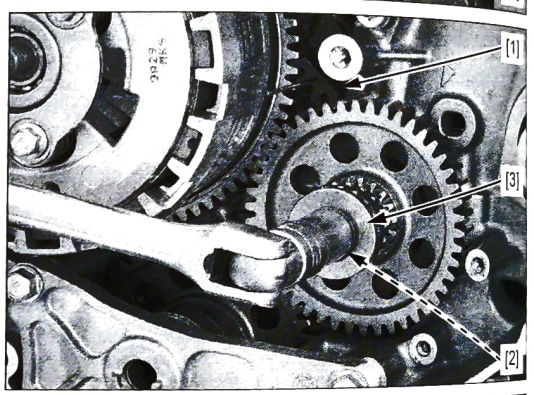

Remove the timing sprocket [1] and primary drive gear [2].

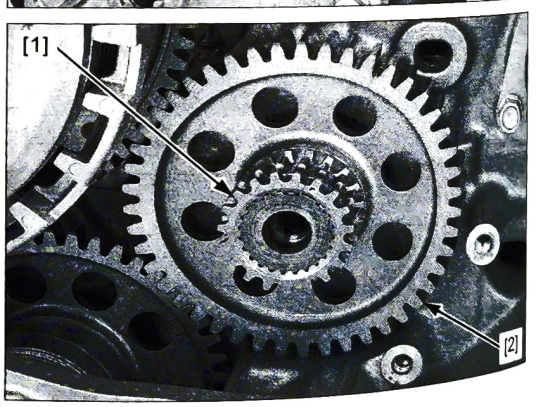

INSPECTION

Inspect the following parts for scratches, damage, abnormal wear and deformation. Replace if necessary.

- Primary drive gear
- Timing sprocket

INSTALLATION

Apply engine oil to the primary drive gear teeth.

Install the primary drive gear [1].

NOTE:

- Align the primary drive gear wide tooth with the crankshaft wide tooth.
- Make sure that the primary drive gear index line is positioned between the rear balancer driven gear index lines.

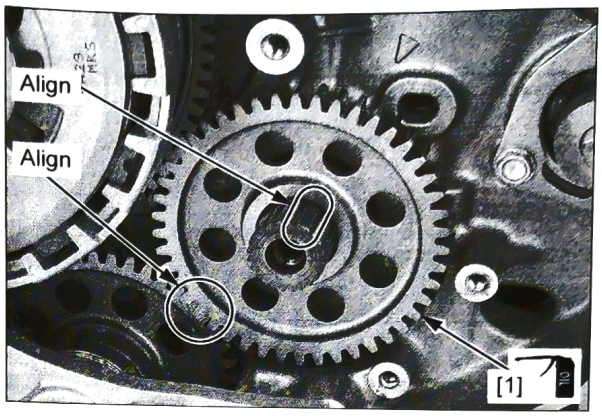

Apply engine oil to the timing sprocket teeth.

Install the timing sprocket [1].

NOTE:

- Install the timing sprocket with its punch mark [2] facing out.
- Align the timing sprocket wide tooth with the crankshaft wide tooth.

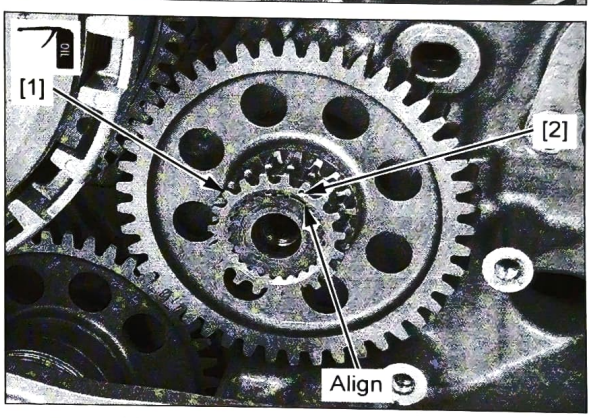

Apply engine oil to the primary drive gear bolt threads and seating surface.

Install the washer [1] and primary drive gear bolt [2].

Install the below special tool between the primary drive and driven gears.

TOOL:

Gear holder, 2.5 [3]	**07724-0010100 or 07724-001A100 (U.S.A. only)**

Tighten the primary drive gear bolt to the specified torque.

TORQUE: 103 N·m (10.5 kgf·m, 76 lbf·ft)

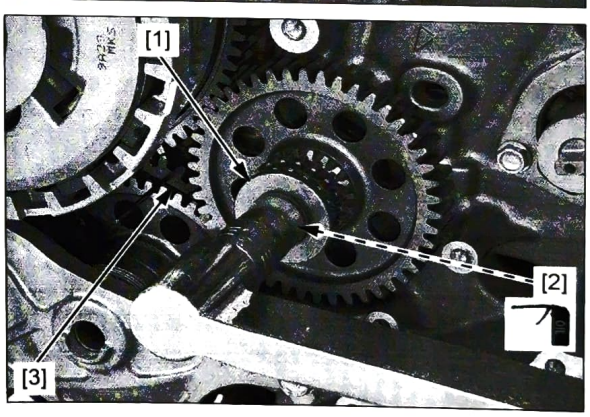

Remove the special tool.

Coat the cam chain with engine oil.

Install the cam chain [1].

Apply locking agent to the cam chain guide plate bolts threads (page 1-11).

Install the cam chain guide plate [2] and cam chain guide plate bolts [3].

Tighten the cam chain guide plate bolts securely.

Install the cylinder head (page 10-17).

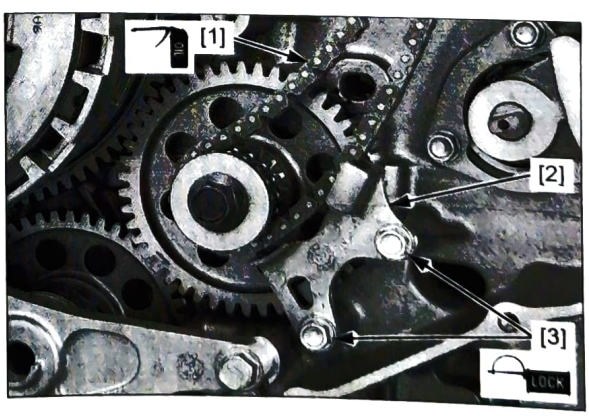

GEARSHIFT LINKAGE

REMOVAL

Remove the following:

- Clutch (page 12-9)
- Gearshift arm (page 12-23)

Remove the gearshift spindle cover bolts [1].

Remove gearshift spindle cover [2].

Clean off any dirt from the gearshift spindle serration [3].

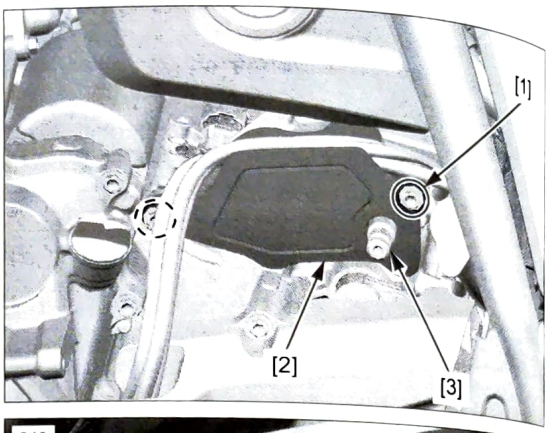

Remove the gearshift spindle set plate bolt [1] and set plate [2].

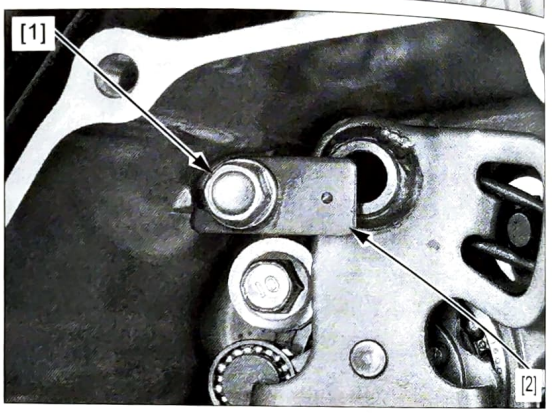

Remove the gearshift spindle assembly [1] and thrust washer [2].

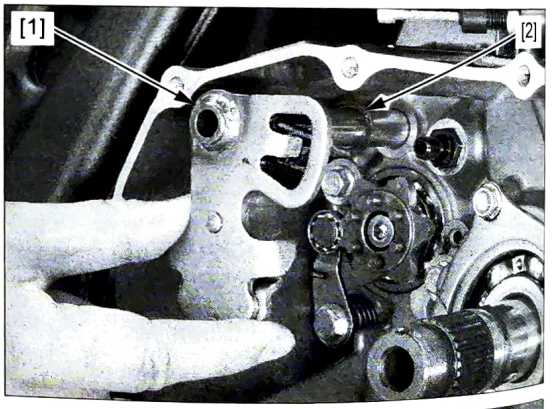

Remove the shift drum center bolt [1].

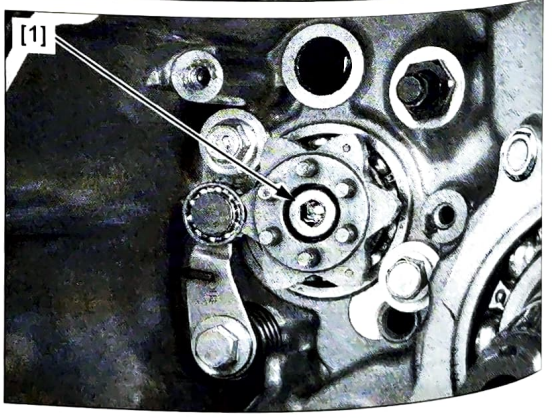

Remove the shift drum center [1] while holding the shift drum stopper arm [2] using a screwdriver as shown.

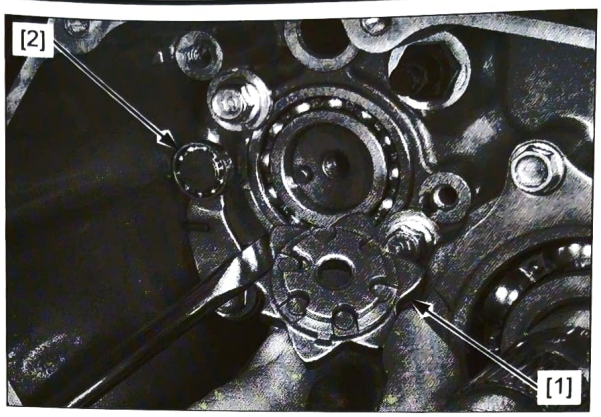

Remove the following:

- Dowel pin [1]
- Shift drum stopper arm pivot bolt [2]
- Shift drum stopper arm [3]
- Shift drum return spring [4]
- Washer [5]

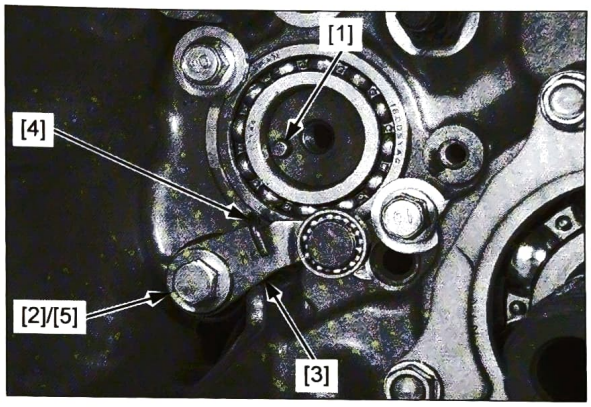

Remove the oil seal [1].

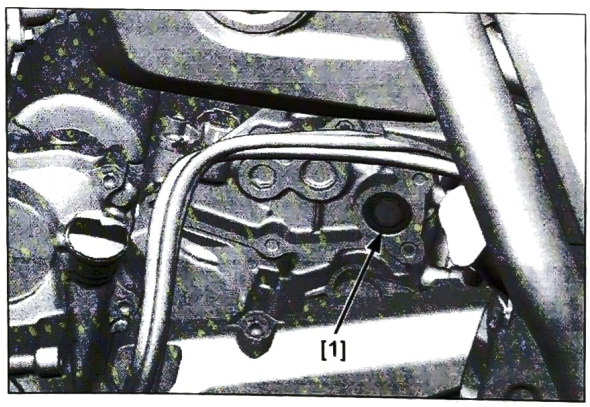

INSPECTION

Inspect the following parts for damage, abnormal wear and deformation. Replace if necessary.

- Shift drum center
- Shift drum stopper arm
- Shift drum return spring
- Gearshift spindle

INSTALLATION

Install a new oil seal [1] until it is fully seated.

Apply grease to the oil seal lips.

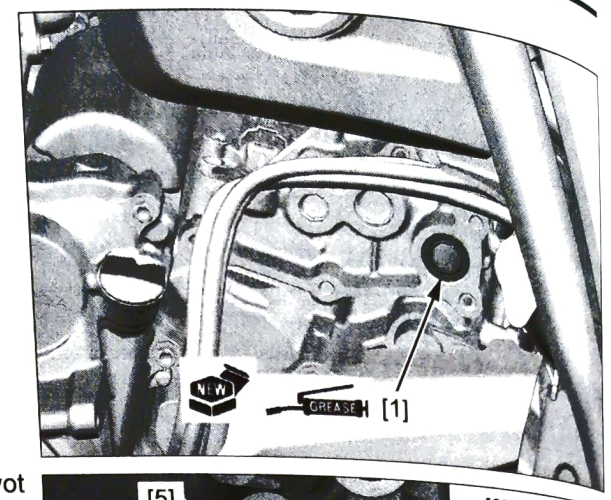

Apply locking agent to the shift drum stopper arm pivot bolt threads (page 1-11).

Install the following:

- Shift drum return spring [1]
- Washer [2]
- Shift drum stopper arm [3]
- Shift drum stopper arm pivot bolt [4]

Tighten the shift drum stopper arm pivot bolt to the specified torque.

TORQUE: 12 N·m (1.2 kgf·m, 9 lbf·ft)

Check the shift drum stopper arm for proper operation.

Install the dowel pin [5].

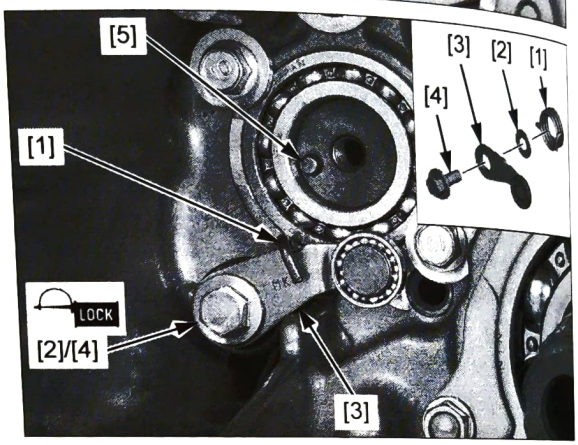

Hold the shift drum stopper arm [1] using a screwdriver.

Install the shift drum center [2].

NOTE:

- Align the shift drum center groove with the dowel pin.

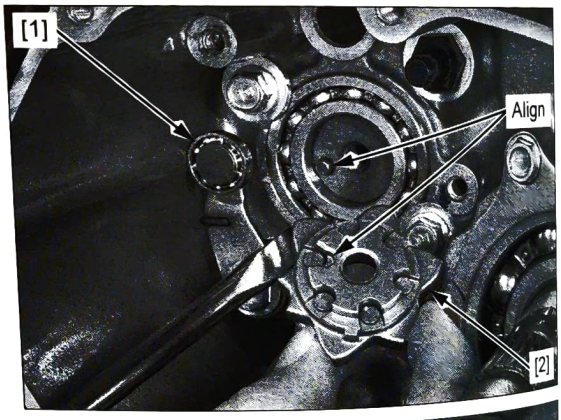

Apply locking agent to the shift drum center bolt threads (page 1-11).

Install and tighten the shift drum center bolt [1] to the specified torque.

TORQUE: 23 N·m (2.3 kgf·m, 17 lbf·ft)

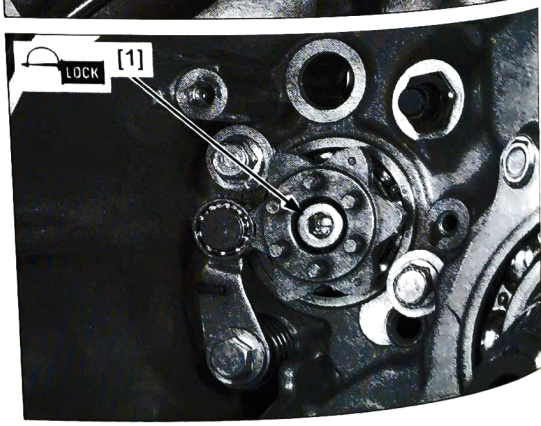

Install the thrust washer [1] onto the gearshift spindle [2].

Install the gearshift spindle into the crankcase.

NOTE:
- Align the gearshift spindle return spring ends with the spring pin.

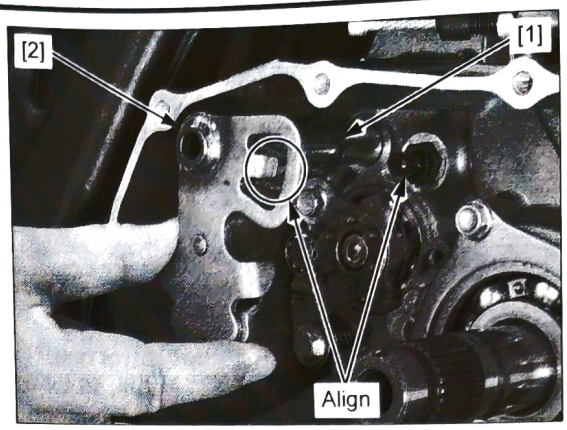

Apply locking agent to the gearshift spindle set plate bolt threads (page 1-11).

Install the set plate [1] and gearshift spindle set plate bolt [2].

NOTE:
- Install the set plate with its punch mark [3] facing out.

Tighten the gearshift spindle set plate bolt to the specified torque.

TORQUE: 12 N·m (1.2 kgf·m, 9 lbf·ft)

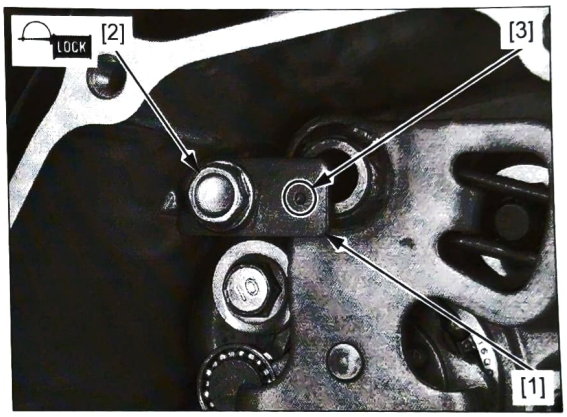

Install the gearshift spindle cover [1] and gearshift spindle cover bolts [2].

Tighten the gearshift spindle cover bolts to the specified torque.

TORQUE: 12 N·m (1.2 kgf·m, 9 lbf·ft)

NOTE:
- Route the wire harness properly (page 1-27).

Install the following:
- Clutch (page 12-9)
- Gearshift arm (page 12-23)

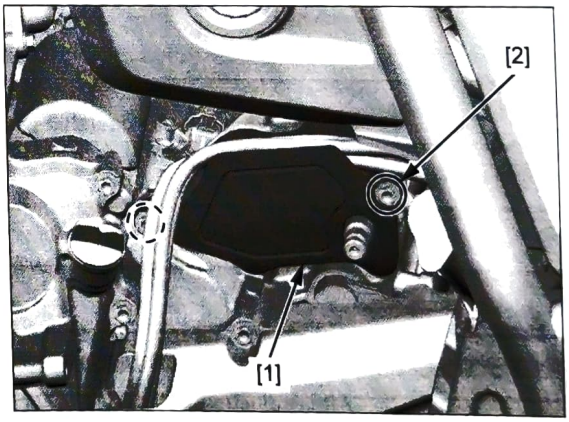

GEARSHIFT ARM/GEARSHIFT PEDAL

REMOVAL/INSTALLATION

Remove the pinch bolt [1] and gearshift arm [2] from the gearshift spindle [3].

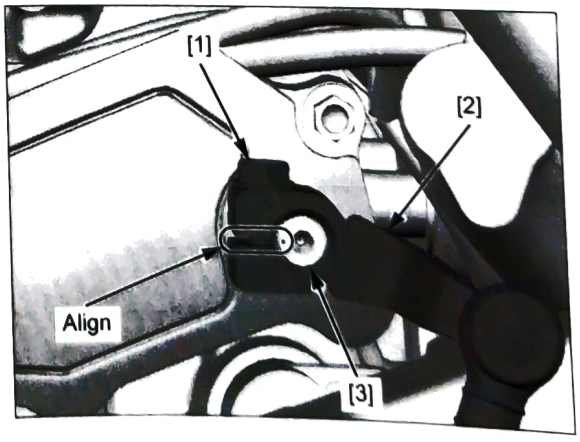

Remove the following:

- Left main step bracket bolt [1]
- Gearshift pedal pivot bolt [2]
- Gearshift pedal [3]
- Washer [4]
- Dust seals [5]

Check the dust seals and tie-rod ball joint dust cover for deterioration or damage, replace them if necessary.

Installation is in the reverse order of removal.

TORQUE:
Gearshift pedal pivot bolt:
26 N·m (2.7 kgf·m, 19 lbf·ft)
Main step bracket mounting socket bolt:
37 N·m (3.8 kgf·m, 27 lbf·ft)

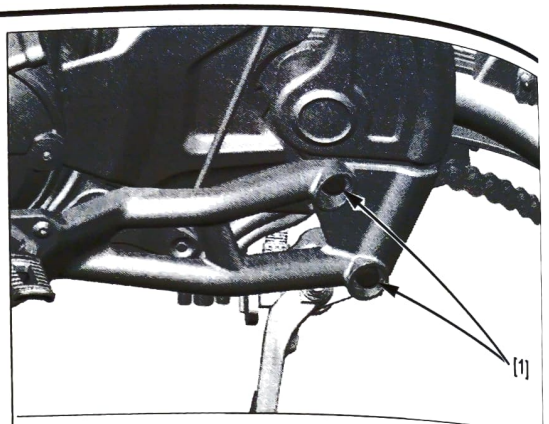

NOTE:
- Apply grease to the dust seal lips.
- Install the dust seals with the seal lip side facing out.
- Apply grease to the gearshift pedal pivot sliding area (grease groove) of the pivot bolt.
- Align the slit of the gearshift arm with the punch mark on the spindle.

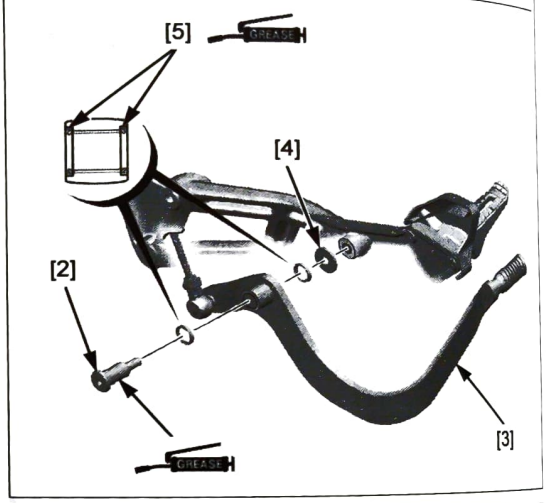

When adjusting the gearshift pedal height, perform the procedure as follows:

Loosen the lock nuts [1].

NOTE:
- The gearshift arm side lock nut has left handed threads.

Adjust the tie-rod [2] length so that the distance between the ball joint ends is standard length as shown.

After adjustment, tighten the lock nuts to the specified torque.

TORQUE: 10 N·m (1.0 kgf·m, 0.7 lbf·ft)

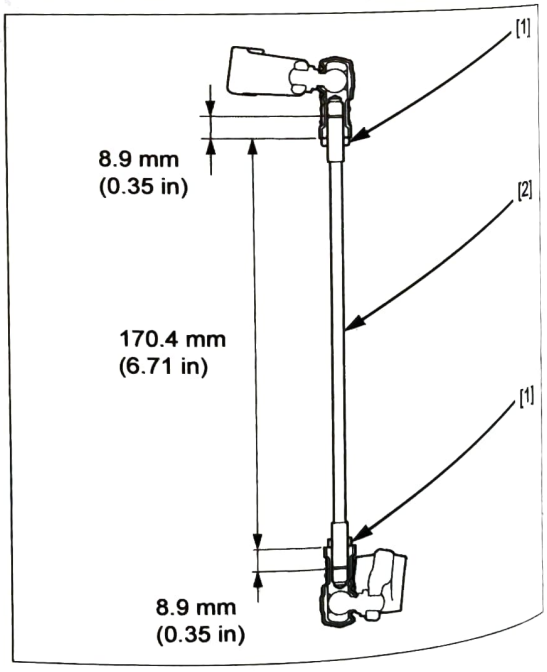

CLUTCH LEVER

REMOVAL/INSTALLATION

Remove the left rearview mirror (page 2-6).

Disconnect the following:

- Clutch switch connectors (upper side) [1]
- Cruise cancel switch connectors (lower side) [2]

Loosen the lock nut [3] and disconnect the clutch cable by turning the adjuster bolt [4].

Remove the following:

- Bolts [5]
- Holder [6]
- Clutch lever assembly [7]

Installation is in the reverse order of removal.

NOTE:

- Install the clutch lever assembly by aligning its end with the punch mark [8] on the handlebar.
- Install the holder with its "UP" mark [9] facing up.
- Tighten the upper bolt first, then the lower bolt.

After installation, adjust the clutch lever freeplay (page 3-24).

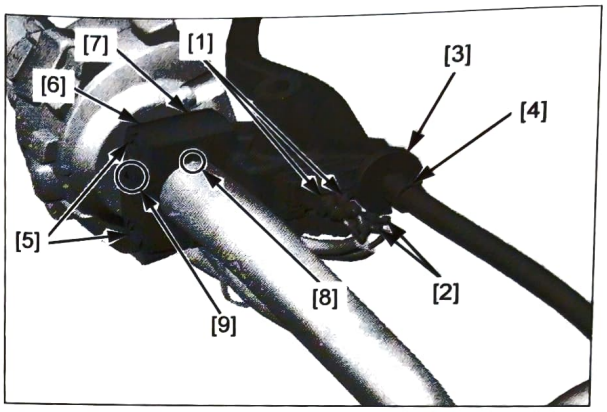

DISASSEMBLY/ASSEMBLY

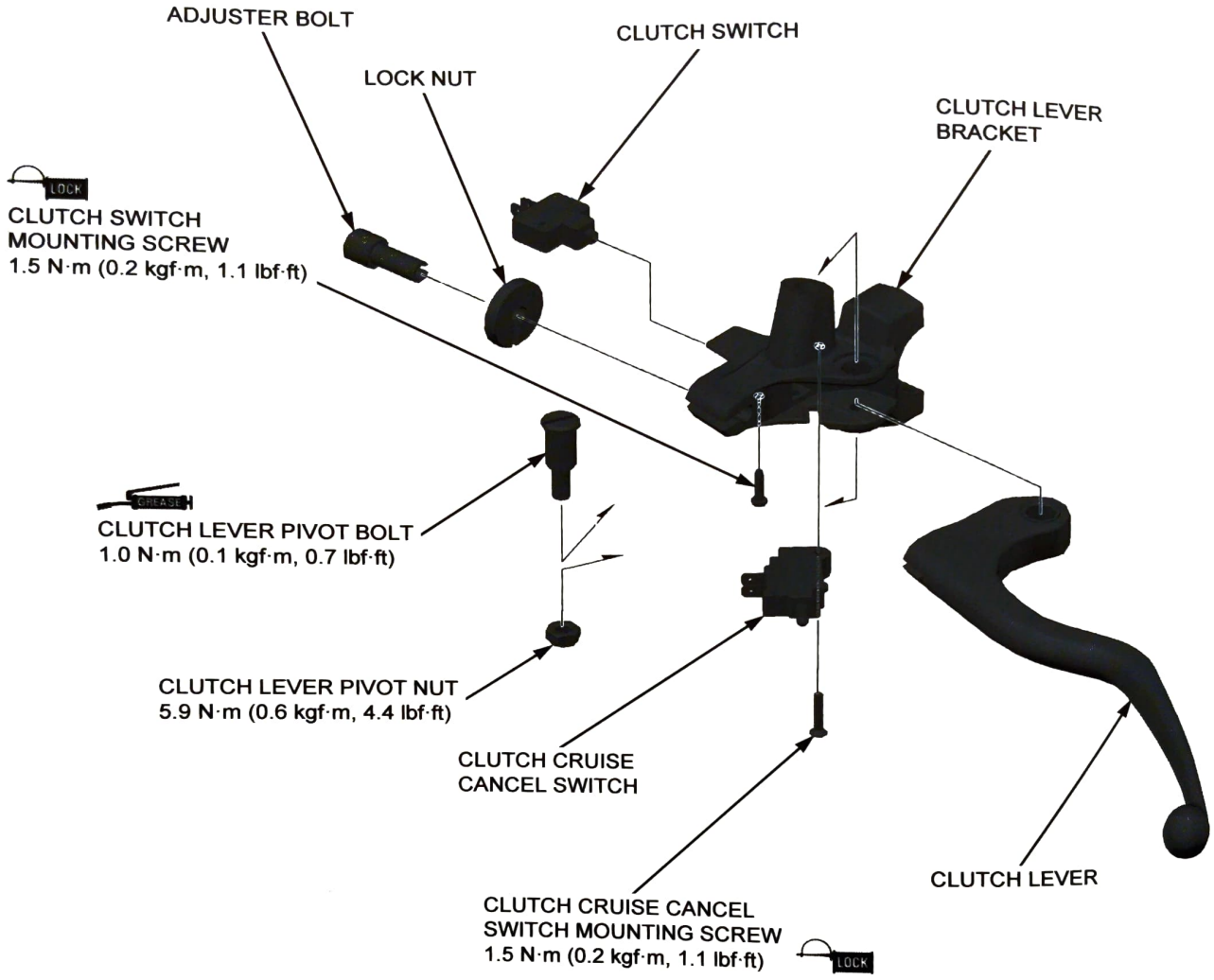

13. DUAL CLUTCH TRANSMISSION (DCT type)

SERVICE INFORMATION 13-2

DCT SYMPTOM TROUBLESHOOTING ... 13-4

COMPONENT LOCATION 13-5

SYSTEM LOCATION 13-6

SYSTEM DIAGRAM 13-7

DCT TROUBLESHOOTING INFORMATION 13-8

DCT DTC INDEX 13-10

DCT DTC TROUBLESHOOTING 13-12

CLUTCH OIL FEED PIPE 13-36

RIGHT CRANKCASE COVER 13-38

LINEAR SOLENOID VALVE 13-44

DUAL CLUTCH/ PRIMARY DRIVEN GEAR 13-48

PRIMARY DRIVE GEAR 13-51

SHIFT CONTROL MOTOR/ REDUCTION GEARS 13-52

GEARSHIFT LINKAGE 13-55

MAINSHAFT SENSOR 13-59

TR SENSOR 13-60

SHIFT SPINDLE ANGLE SENSOR 13-61

CLUTCH EOP SENSOR 13-62

EOT SENSOR 13-62

EOP SENSOR 13-63

NEUTRAL SWITCH 13-63

TCM 13-63

DCT RELAY 13-65

CLUTCH INITIALIZE LEARNING (TCM) 13-65

SERVICE INFORMATION

GENERAL

- This section covers service of the electrical and mechanical systems of the Dual Clutch Transmission (DCT).
- A faulty DCT system is often related to poorly connected or corroded connectors. Check those connections before proceeding.
- Read the "DCT Troubleshooting Information" carefully, and inspect and troubleshoot the DCT system according to the DTC. Perform each step of the procedures one by one. Note the DTC and probable faulty part before starting diagnosis and troubleshooting.
- The TCM may be damaged if dropped. Also, if a connector is disconnected when current is flowing, the excessive voltage may damage the TCM. Always turn off the ignition switch before servicing.
- If the TCM and/or dual clutch are replaced, perform the clutch initialize learning procedure (page 13-65).
- The drive mode AT or MT are changed electrically with the A/M switch.
- Be sure to use the recommended tires, and the specified drive and driven sprocket to operate the dual clutch transmission system normally.
- For left handlebar switch service (page 22-19)
- For right handlebar switch service (page 22-20)
- For VS sensor service (page 4-60)
- For oil pump service (page 9-6)
- The following color codes are used throughout this section.

Be = Beige	Bl = Black	Br = Brown	Bu = Blue	G = Green	Gr = Gray
Lb = Light blue	Lg = Light green	O = Orange	P = Pink	R = Red	V = Violet
W = White	Y = Yellow				

For DCT System Troubleshooting

- The DCT system is controlled by the TCM. Therefore, some detection items are shared in the PGM-FI and DCT systems, and they may affect the operation of both systems.
- Before starting any troubleshooting, check the following items and refer to the appropriate troubleshooting.
  - MIL lights or DTC for the PGM-FI system appeared (page 4-6).
  - Shift indicator blinks or DTC for the DCT system appeared (page 13-8)
  - Symptom of the DCT system operation (page 13-4)
- The gearshift mechanism includes the following items. If the gearshift mechanism is faulty, refer to each component service.
  - Shift control motor/reduction gears (page 13-52)
  - Gearshift linkage (page 13-55)
  - Shift drum/shift fork (page 14-14)

Shift Control Motor Function Procedures

NOTE:
- If the system has a DTC, the function test does not work.
- The function test is not for the quality check of the shift control motor.

Conduct a test of the shift control motor when the following items have been serviced or replaced.

- Shift control motor
- Reduction gears
- TR sensor
- Shift spindle angle sensor

Connect the MCS (page 4-7), and perform the shift control motor function test.

Linear Solenoid Valve Function Procedures

NOTE:
- If the system has a DTC, the function test does not work.
- The function test is not for the quality check of the linear solenoid valve.
- Do not open the throttle while testing the linear solenoid valve function.

Conduct a test of the linear solenoid valves when the linear solenoid valves have been serviced or replaced.

Connect the MCS (page 4-7), and perform the linear solenoid valve function test.

TOOLS

Test probe, 2 packs
07ZAJ-RDJA110

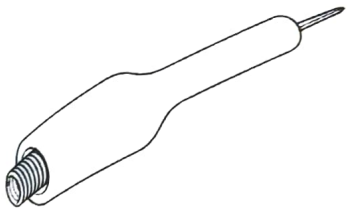

Remover weight
07741-0010201

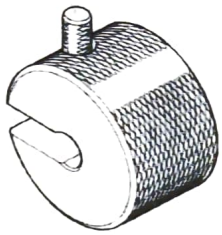

or 07936-371020A (U.S.A. only)
or commercially available 3/8" x 16 slide hammer (U.S.A. only)

Bearing remover shaft
07JAC-PH80200

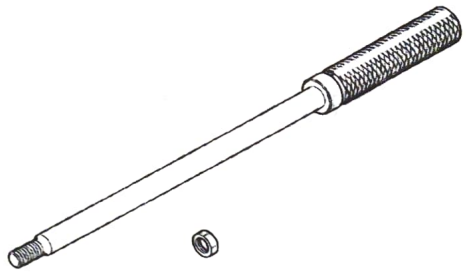

Adjustable bearing puller, 20 – 40 mm
07JAC-PH80100

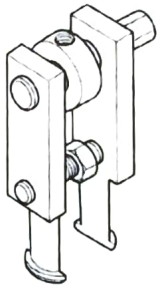

or 07736-A01000B with
07YAC-001A200 (U.S.A. only)

Driver
07749-0010000

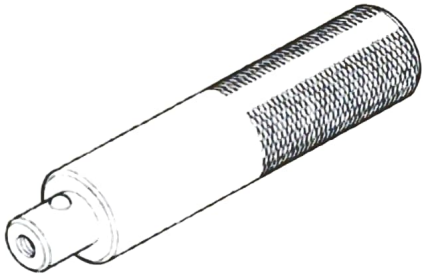

Attachment, 52 x 55 mm
07746-0010400

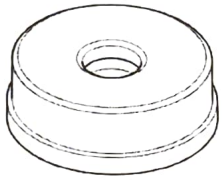

Pilot, 40 mm
07746-0040900

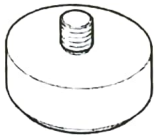

Bearing remover set, 20 mm
07936-3710600

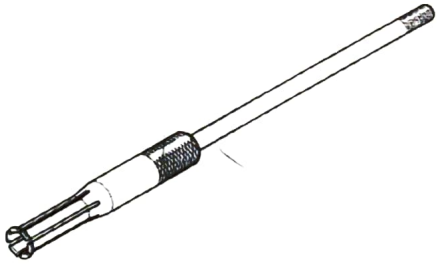

Remover handle
07936-3710100

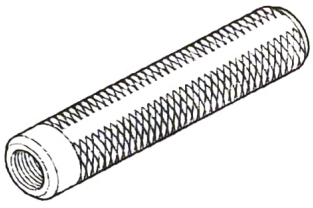

Pilot, 20 mm
07746-0040500

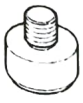

Gear holder, 2.5
07724-0010100

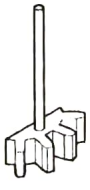

or 07724-001A100 (U.S.A. only)

DCT SYMPTOM TROUBLESHOOTING

Check the shift indicator "–" blinking of the meter (page 13-8).

If the shift indicator "–" is blinking, refer to the DTC index (page 13-10)and begin the appropriate troubleshooting procedure.

If there are no "–" blinking, inspect the engine oil condition and follow the symptom troubleshooting described below.

CLUTCH SLIPS AND MOTORCYCLE DOES NOT ACCELERATE

Check the clutch clearance (page 13-49).

EXCESSIVE NOISE OR VIBRATION AROUND THE DCT SYSTEM

Inspect the following components:

- Clutch clearance
- Dual clutch needle bearings for wear or damage
- Primary drive for wear or damage
- Primary driven gear for wear or damage
- Each fastener is tightened to the correct torque value

Replace the damaged components if necessary and tighten the loose fasteners to the specified torque.

COMPONENT LOCATION

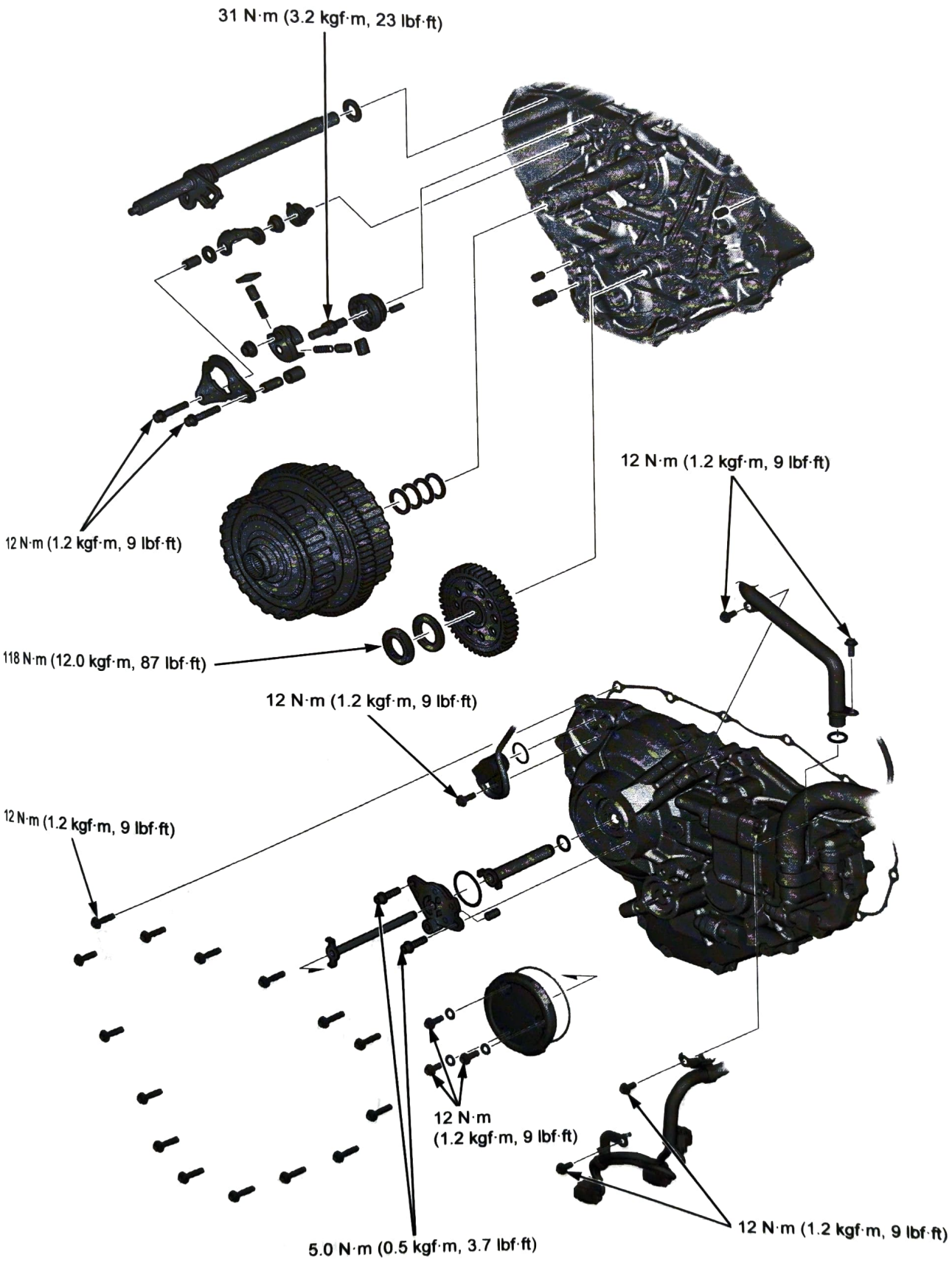

SYSTEM LOCATION

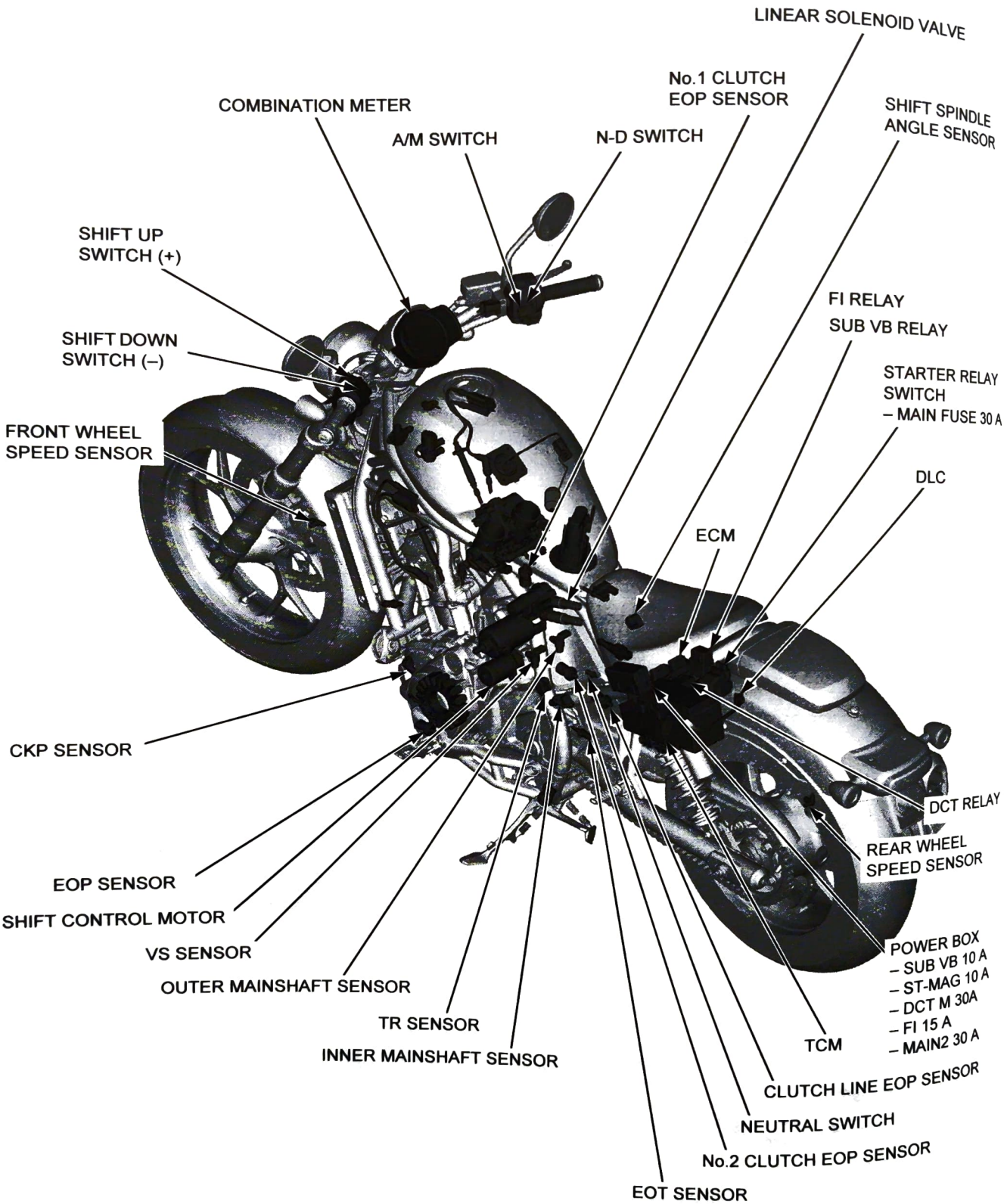

SYSTEM DIAGRAM

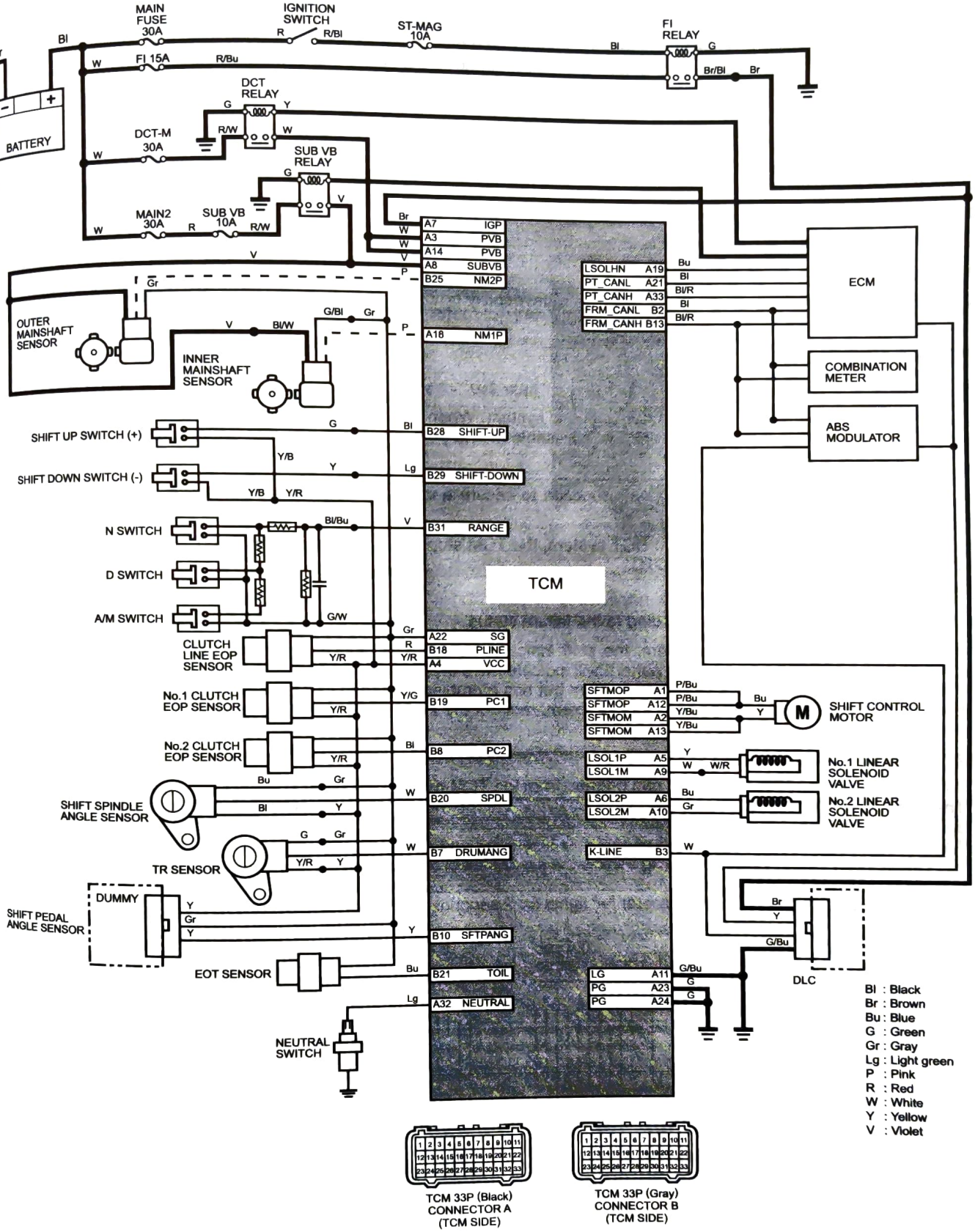

DCT TROUBLESHOOTING INFORMATION

GENERAL TROUBLESHOOTING

Intermittent Failure

The term "intermittent failure" means a system may have had a failure, but it checks OK now. If the shift indicator "–" does not come on, check for poor contact or loose pins at all connectors related to the circuit that you are troubleshooting. If the shift indicator "–" was on, but then went out, the original problem may be intermittent.

Opens and Shorts

"Opens" and "Shorts" are common electrical terms. An open is a break in a wire or at a connection. A short is an accidental connection of a wire to ground or to another wire. In simple electronics, this usually means something will not work at all. With TCMs this can sometimes mean something works, but not the way it's supposed to.

If the shift indicator "–" has come on

Refer to DTC READOUT (page 13-9).

If the shift indicator "–" did not stay on

If the shift indicator "–" did not stay on, but there is a driveability problem, do the SYMPTOM TROUBLESHOOTING (page 13-4).

SYSTEM DESCRIPTION

SELF-DIAGNOSIS SYSTEM

The DCT system is equipped with the self-diagnostic system. When any abnormality occurs in the DCT system, the TCM has the shift indicator blinking "–" and stores a DTC in its erasable memory for the relevant system failure.

FAIL-SAFE FUNCTION

The DCT system is provided with a fail-safe function to secure a minimum running capability even when there is trouble in the system.

When the TCM detects a problem in the DCT system, the TCM stops the gearshift function, and holds the gear position. Also, the shift indicator blinks "–" to indicate the DTC.

CURRENT DTC/STORED DTC

The DTC is indicated in two ways according to the failure status.

- If the TCM detects a current problem, the shift indicator "–" will blink and begin to blink as its DTC when the sidestand is lowered. The shift indicator "–" blink pattern will indicate the current DTC.
- If the TCM does not detect any current problem but has a problem stored in its memory, the shift indicator "–" will not light and blink. If it is necessary to retrieve the past problem, readout the stored DTC by following the DTC readout procedure (page 13-9).

Shift indicator "–" Blink Pattern

- If the MCS is not available, the DTC can be read from the TCM memory by the shift indicator "–" blink pattern (page 13-8).
- The number of shift indicator "–" blinks is the equivalent of the main code of the DTC (the sub code cannot be displayed by the shift indicator "–").
- The shift indicator "–" has two types of blinks, a long blink and short blink. The long blinking lasts for 1.2 seconds, the short blinking lasts for 0.4 seconds. One long blink is the equivalent of ten short blinks. For example, DTC 14 and DTC 8 are indicated in the following blink pattern.
- When there isn't a DTC, the shift indicator "–" lights for 2 seconds at intervals of 3 seconds.

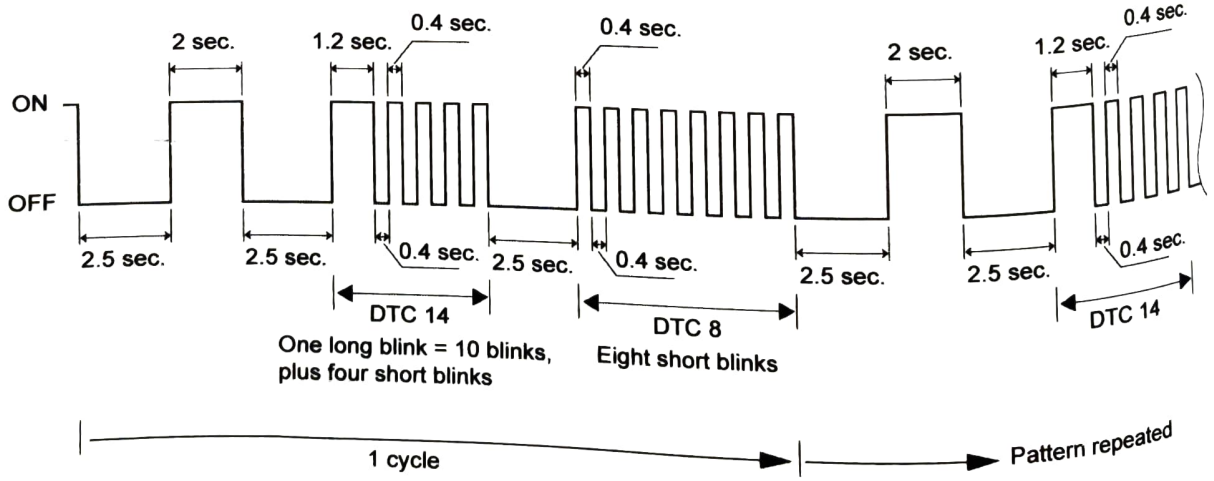

MCS INFORMATION

Refer to the PGM-FI system (page 4-7).

NOTE:
The front wheel speed sensor signal can be disabled with the MCS for testing. Never ride the motorcycle with the TCM in this mode.

DTC READOUT

NOTE:
• If there is any problem in the PGM-FI system, troubleshoot it first. Then recheck the DCT system after erasing the PGM-FI DTC.

Read the DTC and stored data with the MCS, and follow the troubleshooting index (page 13-10).

To read the DTC without the MCS, use the following procedure.

Reading DTC with the shift indicator "–"

1. Connect the SCS short connector to the DLC (page 4-8).
2. While pushing the shift up switch (+) [1], turn the ignition switch ON. Read and note the shift indicator "–" blinks and refer to the troubleshooting index (page 13-10).

NOTE:
• If the TCM has no DTC in its memory, the shift indicator "–" will start blinking (page 13-9).

3. Release the shift up switch (+).

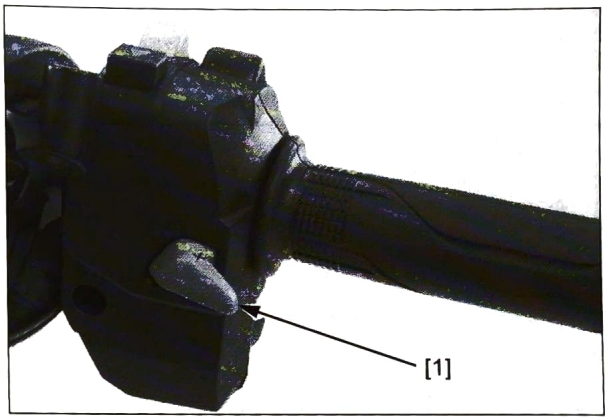

ERASING DTC

Connect the MCS to the DLC (page 4-7).

Erase the DTC with the MCS while the engine is stopped.

To erase the DTC without MCS, refer to the following procedure.

How to erase the DTC without MCS

1. Erase the DTC (page 4-8).
2. The DTC is erased if the shift indicator "–" goes off and starts blinking as shown.

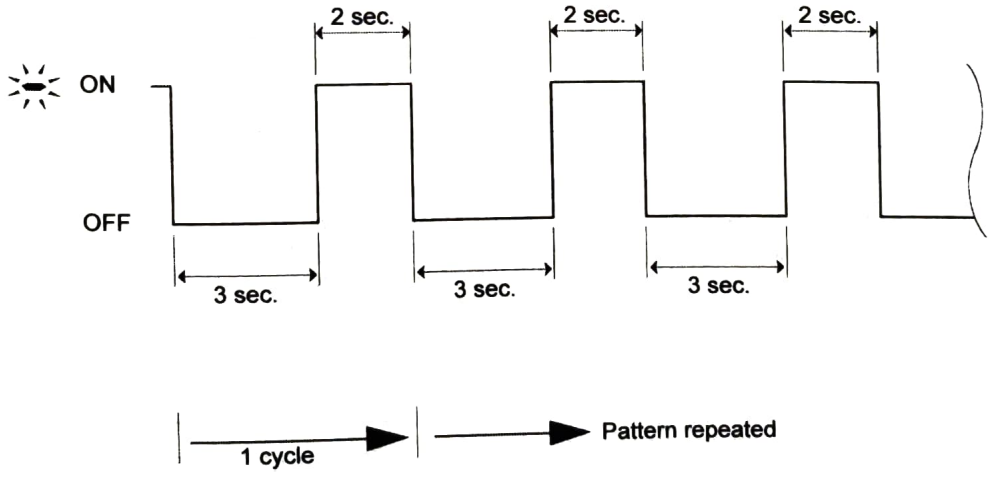

NOTE:
Note that the DTC cannot be erased if the ignition switch is turned to "OFF" before the shift indicator "–" starts blinking.

3. Turn the ignition switch OFF.
4. Remove the special tool from the DLC.

DCT DTC INDEX

- If MCS is not used, perform all on the corresponding main code (digits in front of hyphen) of the Honda code.
- About Diagnostic Trouble Codes other than in this DTC INDEX, refer to PGM-FI SYSTEM DTC INDEX (page 4-11).
- Follow the prior diagnosis notes before performing the troubleshooting, refer to the PRIOR DIAGNOSIS (page 13-12).

DTC	DTC (Honda code)	Detected D/C (Driving Cycle)	DTC name	Refer to page
P0197	44-1	–	EOT Sensor Circuit Low (EOT Sensor Low Voltage)	13-13
P0198	44-2	–	EOT Sensor Circuit High (EOT Sensor High Voltage)	
P0500	67-1	1	VSP Sensor 1 Malfunction (Front Wheel Speed Sensor Malfunction)	4-34
P0501	67-1	1	Vehicle Speed Sensor Range Performance Error (Front Wheel Pulser Ring Malfunction)	13-14
P0522	–	1	EOP Sensor Low (EOP Sensor Low Voltage)	13-14
P0523	–	1	EOP Sensor High (EOP Sensor High Voltage)	
P0562	37-1	1	System Voltage (Sub VB Relay Malfunction)	4-35
P0606	84-1	1	Control Module Processor (CPU in the ECM Malfunction)	4-36
P0686	37-1	1	ECM/PCM Power Relay Control Circuit Low (Ignition Hold Relay Stuck OFF)	4-35
P0687	37-1	–	ECM/PCM Power Relay Control Circuit High (Ignition Hold Relay Stuck ON)	
P0715	53-1	1	Input Speed Sensor 1 Circuit (Inner Mainshaft Speed Low)	13-16
P0722	11-1	1	OS Sensor Circuit No Signal (VS Sensor Circuit No Signal)	4-38
P0745	55-1	1	Pressure Control Solenoid Malfunction (No.1 Linear Solenoid Valve Current Failure)	13-17
	55-2	1	Pressure Control Solenoid Malfunction (No.1 Linear Solenoid Valve Driver in the TCM Failure)	
P0775	56-1	1	Pressure Control Solenoid 2 Malfunction (No.2 Linear Solenoid Valve Current Failure)	13-18
	56-2	1	Pressure Control Solenoid 2 Malfunction (No.2 Linear Solenoid Valve Driver in the TCM Failure)	
P0851	52-1	–	Park/Neutral Switch Input Circuit Low (Neutral Switch Stuck OFF)	13-19
P0852	52-2	–	Park/Neutral Switch Input Circuit High (Neutral Switch Stuck ON)	
P1700	71-1	1	In Main/Countershaft SP Ratio Failure (Inner Mainshaft/countershaft Speed Ratio Failure)	13-20
P1701	72-1	1	Outer Main/Countershaft SP Ratio Failure (Outer Mainshaft/countershaft Speed Ratio Failure)	
P1702	51-1	1	TR Sensor Circuit Low (TR Sensor Low Voltage)	13-20
P1703	51-2	1	TR Sensor Circuit High (TR Sensor High Voltage)	
P1704	47-1	1	No.1 Clutch EOP Sensor Low Voltage	13-22
P1705	47-2	1	No.1 Clutch EOP Sensor High Voltage	
P1706	48-1	1	No.2 Clutch EOP Sensor Low Voltage	
P1707	48-2	1	No.2 Clutch EOP Sensor High Voltage	
P1708	21-1	1	Shift Spindle Angle Sensor Low Voltage	13-23
P1709	21-2	1	Shift Spindle Angle Sensor High Voltage	
P170A	24-1	1	Shift Control Motor Drive Circuit	13-24
P170B	31-1	1	Shift Control Motor Low Voltage	
P1712	84-2	1	TCM CPU Malfunction (CPU in the ECM or TCM Malfunction)	4-43
P1713	22-1	1	Spindle Operation During Shifter Stop (Shift Spindle Operation Malfunction (After Operating Gearshift Mechanism))	13-26
P1714	27-1	1	Shift Drum Position Malfunction	13-26

DTC	DTC (Honda code)	Detected D/C (Driving Cycle)	DTC name	Refer to page
P1716	9-2	–	Clutch Line EOP Sensor High Voltage (Clutch Line EOP Sensor Low Voltage)	13-27
P1717	9-1	–	Clutch Line EOP Sensor Low Voltage (Clutch Line EOP Sensor High Voltage)	
P1718	49-1	–	Shift Control Motor Drive Circuit (Clutch Line Low Oil Pressure)	13-28
P1719	68-1	1	Clutch (1) Being Dysversion (No.1 Clutch Operation Malfunction (Clutch Slips))	13-28
P171A	69-1	1	Clutch (2) Being Dysversion (No.2 Clutch Operation Malfunction (Clutch Slips))	13-29
P171B	58-1	–	Clutch Bite Crowded (Clutch 1 Not Opening) (No.1 Clutch Does Not Disengage (When Shifting Gear))	13-29
P171C	59-1	–	Clutch Bite Crowded (Clutch 2 Not Opening) (No.2 Clutch Does Not Disengage (When Shifting Gear))	
P171D	61-4	–	Clutch Bite Crowded (1) Pressure Not Opening (No.1 Clutch Oil Pressure Canceling Malfunction)	13-30
P171E	61-1	1	Clutch (1) Hydraulic Pressure Malfunction (No.1 Clutch Oil Pressure Malfunction (at Clutch Initial Diagnosis))	
P171F	61-2	1	Clutch (1) No Pressure (No.1 Clutch Not Oil Pressure)	
P1720	61-3	1	Clutch (1) Hydraulic Pressure Low (No.1 Clutch Oil Pressure Degradation)	
P1721	62-1	–	Clutch (1) Hydraulic Pressure Rise (No.1 Clutch Oil Pressure High)	
P1722	63-4	–	Clutch Bite Crowded (2) Pressure Not Opening (No.2 Clutch Oil Pressure Canceling Malfunction)	
P1723	63-1	1	Clutch (2) Hydraulic Pressure Malfunction (No.2 Clutch Oil Pressure Malfunction (at Clutch Initial Diagnosis))	
P1724	63-2	1	Clutch (2) No Pressure (No.2 Clutch Not Oil Pressure)	
P1725	63-3	1	Clutch (2) Hydraulic Pressure Low (No.2 Clutch Oil Pressure Degradation)	
P1726	64-1	–	Clutch (2) Hydraulic Pressure Rise (No.2 Clutch Oil Pressure High)	
P1728	57-1	1	Shifter Malfunction (Gearshift Mechanism Malfunction)	13-30
P1729	57-2	1	Shifter Setting Malfunction (Gear Position Malfunction (Jumps Out of Gear))	
P172C	46-1	–	N-D Switch Signal Malfunction (N-D Switch Malfunction)	13-30
P172D	45-1	–	Shifter Driven in Spindle Inactive (Shift Switch Malfunction)	13-32
P172E	32-1	1	FSR Malfunction (Fail Safe Relay Circuit Malfunction)	13-33
P2158	66-1	1	VSP Sensor 2 Malfunction (Rear Wheel Speed Sensor Malfunction)	4-49
P2159	66-1	1	Vehicle Speed Sensor Range Performance Error (Rear Wheel Pulser Ring Malfunction)	13-34
P2765	54-1	1	Input Speed Sensor 2 Circuit (Outer Mainshaft Speed Low)	13-34
U019E	112-1	1	CAN Communication Malfunction (PTCAN) (Power train CAN Communication Malfunction)	4-52

DCT DTC TROUBLESHOOTING

PRIOR DIAGNOSIS

Before processing the DTC troubleshooting, check as follows:

- Check for loose or poor contact on the DTC related connectors (each sensor, solenoid, unit etc.), then recheck the DTC.
- Erase the DTC (page 13-9)and recheck it.
- Refer to probable cause of each detected DTC and check the listed items first. If possible, correct the abnormally.

NOTE:

- Always turn the ignition switch OFF when checking the continuity of the circuit and before disconnecting the connectors.
- Some DTCs have a recheck function, so that the priority DTC is detected when the ignition switch is switched from OFF to ON. Wait for 10 seconds and check the DTC again.

COMMON TROUBLESHOOTING INFORMATION

NOTE:

- Always use the test probe when inspecting at the ECM, TCM, ABS modulator, BCU, and SCU connectors.

TOOL:
Test probe, 2 packs **07ZAJ-RDJA110**

- If the TCM is replaced, perform the Clutch Initialize Learning Procedure (page 13-65).
- When performing the test ride for the troubleshooting procedure, set the motorcycle to the preferred value as shown in the below chart. Conduct a test ride with your confirmation.

Motorcycle speed*:	**About 60 km/h (37 mph)**
Running time:	**1 minute or more**
Engine revolution:	**4,000 – 7,500 rpm**
Throttle opening angle:	**14 degrees or more**

*: If the test ride cannot be performed, replace parts that may be abnormal.

DTC P0197/DTC P0198

Probable cause:

- Faulty EOT sensor or its related circuit
- Faulty TCM

Symptom/Fail-safe function:

- Gearshift function works normally

1. EOT Sensor Input Line Open Circuit Inspection

Disconnect the TCM 33P (Gray) connector (page 13-63).
Disconnect the EOT sensor connector (page 13-62).
Check for continuity between the wire harness side EOT sensor connector [1] and TCM 33P (Gray) connector [2].

CONNECTION: Blue – B21

Is there continuity?

YES – GO TO STEP 2.

NO – Open circuit in the Blue wire

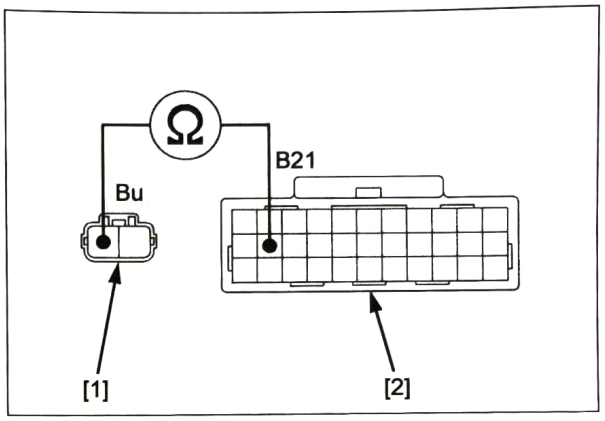

2. EOT Sensor Ground Line Open Circuit Inspection

Disconnect the TCM 33P (Black) connector (page 13-63).
Check for continuity between the wire harness side EOT sensor connector [1] and TCM 33P (Black) connector [2].

CONNECTION: Gray – A22

Is there continuity?

YES – GO TO STEP 3.

NO – Open circuit in the Gray wire

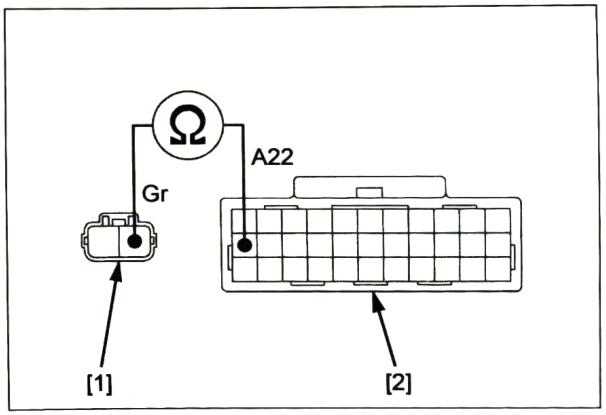

3. EOT Sensor Input Line Short Circuit Inspection

Check the continuity between the wire harness side EOT sensor connector [1] and ground.

CONNECTION: Blue – Ground

Is there continuity?

YES – Short circuit in the Blue wire

NO – GO TO STEP 4.

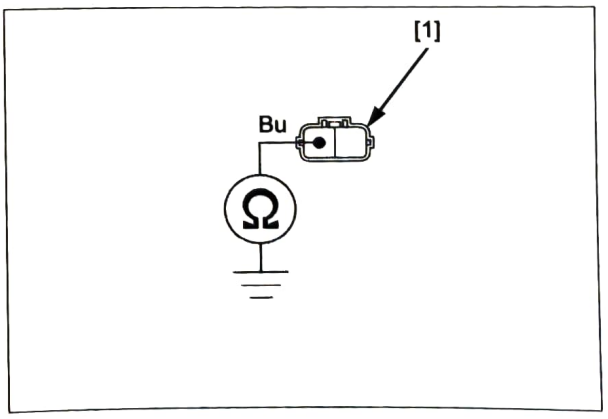

4. EOT Sensor Inspection

Replace the EOT sensor with a new one.
Connect the disconnected connector(s).
Erase the DTC.
Turn the ignition switch ON and wait for 10 seconds.
Check the DTC with MCS.

Is same DTC indicated?

YES – Replace the TCM with a new one, and recheck.

NO – Faulty original EOT sensor

DTC P0501

Probable cause:

- Faulty front wheel pulser ring
- Contaminated pulser ring (iron or other magnetic deposits)
- Faulty front wheel speed sensor or its related circuit
- ABS modulator has DTC
- Faulty ECM

Symptom/Fail-safe function:

- Engine operates normally
- Cruise control does not operate

Refer to DTC P0500 troubleshooting (page 4-34).

DTC P0522/DTC P0523

Probable cause:

- Faulty EOP sensor or its related circuit
- Faulty ECM

Symptom/Fail-safe function:

- Engine operates at idle speed

1. EOP Sensor Input Line Open Circuit Inspection

Disconnect the EOP sensor connector (page 13-63).
Measure the voltage at the wire harness side EOP sensor connector [1].

CONNECTION: Yellow (+) – Gray (–)

Is the voltage within 4.75 – 5.25 V?

YES – GO TO STEP 2.

NO –
- Open or short circuit in the Yellow wire
- Open circuit in the Gray wire
- If the wire is OK, replace the ECM with a new one, and recheck.

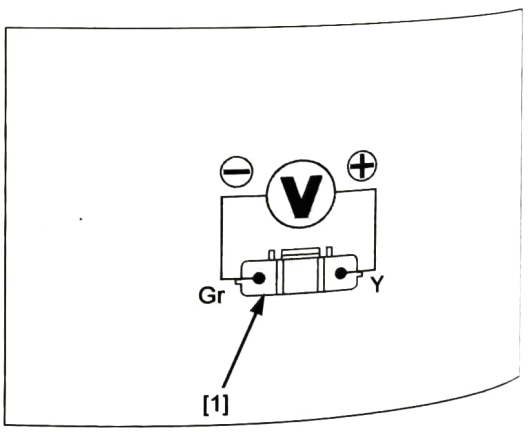

2. EOP Sensor Output Line Open Circuit Inspection

Disconnect the ECM 33P (Gray) connector (page 4-58).
Check for continuity between the wire harness side EOP sensor connector [1] and ECM 33P (Gray) connector [2].

CONNECTION: White/blue – C20

Is there continuity?

YES – GO TO STEP 3.

NO – Open circuit in the White/blue wire

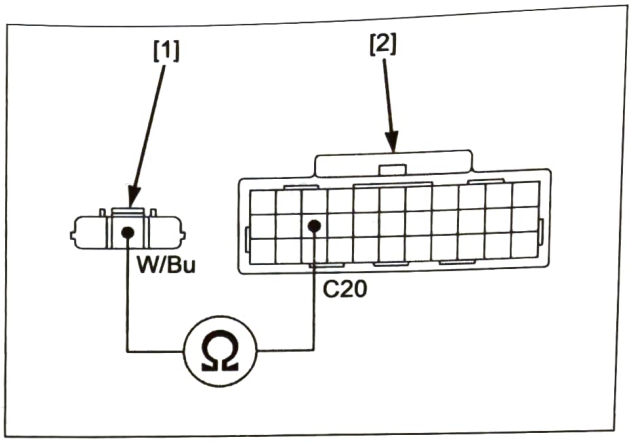

3. EOP Sensor Output Line Short Circuit Inspection

Check for continuity between the wire harness side EOP sensor connector [1] and ground.

CONNECTION: White/blue – Ground

Is there continuity?

YES – Short circuit in the White/blue wire

NO – GO TO STEP 4.

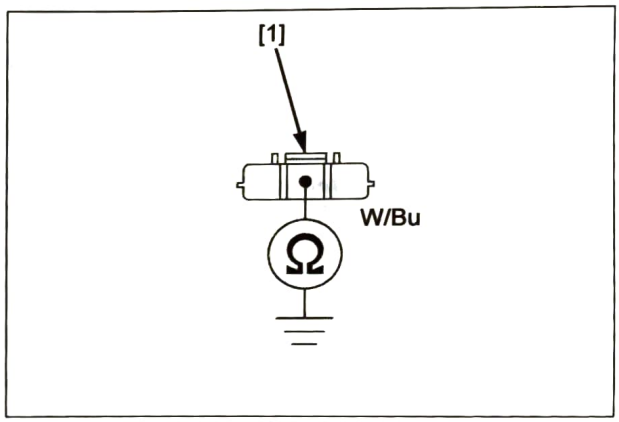

4. EOP Sensor Inspection

Replace the EOP sensor with a new one.
Connect the disconnected connector(s).
Erase the DTC.
Turn the ignition switch ON and wait for 10 seconds.
Check the DTC with MCS.

Is same DTC indicated?

YES – Replace the ECM with a new one, and recheck.

NO – Faulty original EOP sensor

DTC P0715

Probable cause:

- Electromagnetic interference
- Faulty inner mainshaft sensor or its related circuit
- Faulty TCM

Symptom/Fail-safe function:

- Gearshift function does not work

1. Inner Mainshaft Sensor Input Voltage Inspection

Disconnect the inner mainshaft sensor connector (page 13-59).
Turn the ignition switch ON.
Measure the voltage at the wire harness side inner mainshaft sensor connector [1].

CONNECTION: Violet (+) – Gray (–)

Is there about battery voltage?

YES – GO TO STEP 2.

NO – • Open or short circuit in the Violet wire
• Open circuit in the Gray wire
• If the wire is OK, replace the TCM with a new one, and recheck.

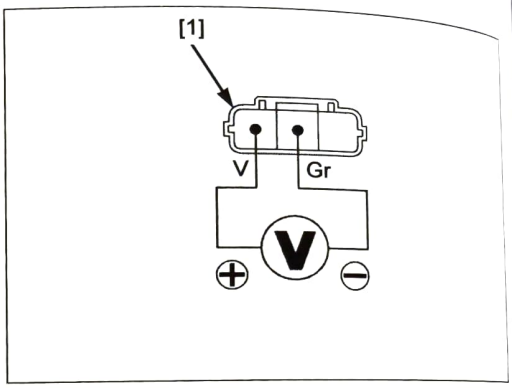

2. Inner Mainshaft Sensor Output Line Open Circuit Inspection

Check for continuity between the wire harness side inner mainshaft sensor connector [1] and TCM 33P (Black) connector [2].

CONNECTION: Pink – A18

Is there continuity?

YES – GO TO STEP 3.

NO – Open circuit in the Pink wire

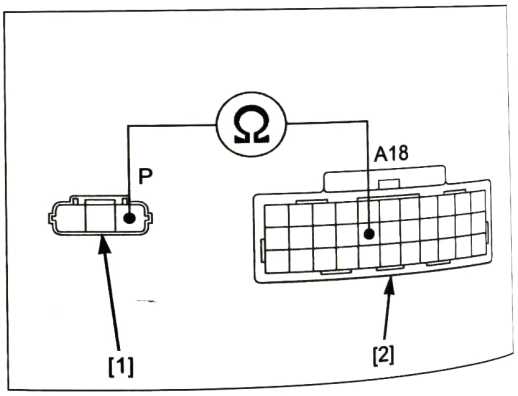

3. Inner Mainshaft Sensor Output Line Short Circuit Inspection

Check for continuity between the wire harness side inner mainshaft sensor connector [1] and ground.

CONNECTION: Pink – Ground

Is there continuity?

YES – Short circuit in the Pink wire

NO – GO TO STEP 4.

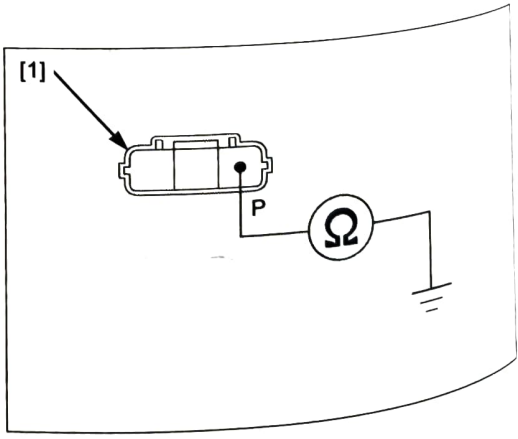

4. Inner Mainshaft Sensor Inspection

Replace the inner mainshaft sensor with a new one.
Erase the DTC.
Check the DTC with MCS.

Is same DTC indicated?

YES – Replace the TCM with a new one, and recheck.

NO – Faulty original inner mainshaft sensor

DTC P0745

Probable cause:

- Faulty No.1 linear solenoid valve or its related circuit
- Faulty TCM

Symptom/Fail-safe function:

- Gearshift function does not work

1. No.1 Linear Solenoid Valve Line Open Circuit Inspection

Disconnect the TCM 33P (Black) connector (page 13-63).
Disconnect the liner solenoid valve connector (page 13-44).
Check for continuity between the wire harness side linear solenoid valve connector [1] and TCM 33P (Black) connector [2].

CONNECTION:
Yellow – A5
White – A9

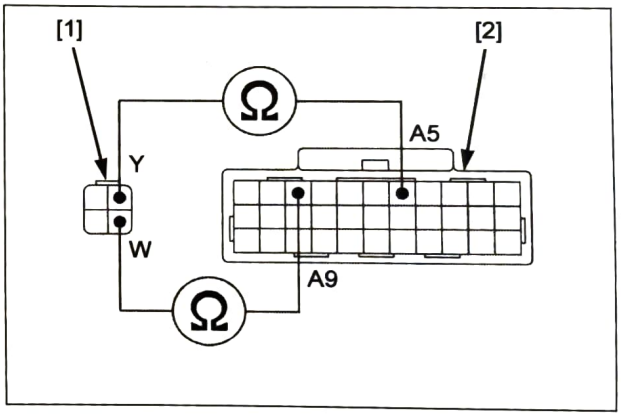

Is there continuity?

YES – GO TO STEP 2.

NO – • Open circuit in the Yellow wire
• Open circuit in the White wire

2. No.1 Linear Solenoid Valve Line Short Circuit Inspection

Check for continuity between the wire harness side linear solenoid valve connector [1] and ground.

CONNECTION:
Yellow – Ground
White – Ground

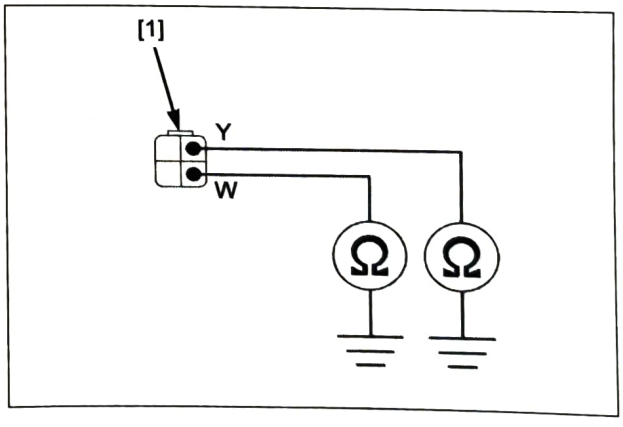

Is there continuity?

YES – • Short circuit in the Yellow wire
• Short circuit in the White wire

NO – GO TO STEP 3.

3. **No.1 Linear Solenoid Valve Inspection**

Replace the linear solenoid valve with a new one.
Connect the disconnected connector(s).
Erase the DTC.
Turn the ignition switch ON and wait for 10 seconds.
Start the engine and wait for 10 seconds.
Check the DTC with MCS.

Is same DTC indicated?

YES – Replace the TCM with a new one, and recheck.

NO – Faulty original No.1 linear solenoid valve

DTC P0775

Probable cause:

- Faulty No.2 linear solenoid valve or its related circuit
- Faulty TCM

Symptom/Fail-safe function:

- Gearshift function does not work

1. **No.2 Linear Solenoid Valve Line Open Circuit Inspection**

Disconnect the TCM 33P (Black) connector (page 13-63).
Disconnect the liner solenoid valve connector (page 13-44).
Check for continuity between the wire harness side linear solenoid valve connector [1] and TCM 33P (Black) connector [2].

CONNECTION:
Blue – A6
Gray – A10

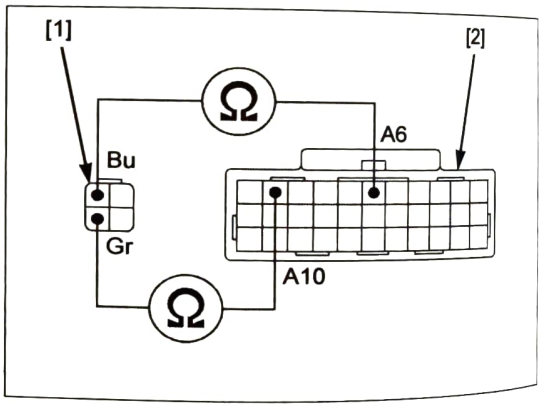

Is there continuity?

YES – GO TO STEP 2.

NO – • Open circuit in the Blue wire
• Open circuit in the Gray wire

2. **No.2 Linear Solenoid Valve Line Short Circuit Inspection**

Check for continuity between the wire harness side linear solenoid valve connector [1] and ground.

CONNECTION:
Blue – Ground
Gray – Ground

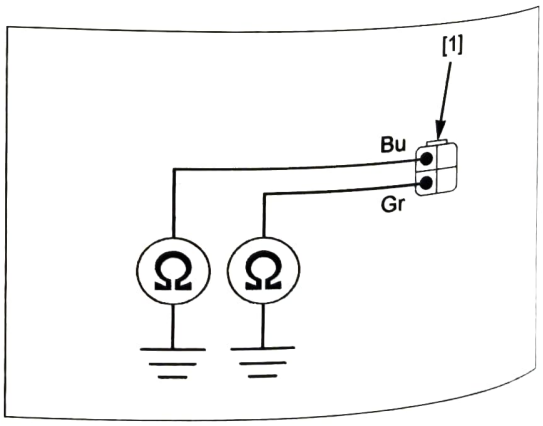

Is there continuity?

YES – • Short circuit in the Blue wire
• Short circuit in the Gray wire

NO – GO TO STEP 3.

3. **No.2 Linear Solenoid Valve Inspection**

Replace the linear solenoid valve with a new one.
Connect the disconnected connector(s).
Erase the DTC.
Turn the ignition switch ON and wait for 10 seconds.
Start the engine and wait for 10 seconds.
Check the DTC with MCS.

Is same DTC indicated?

YES – Replace the TCM with a new one, and recheck.

NO – Faulty original No.2 linear solenoid valve

DTC P0851/DTC P0852

Probable cause:

- Faulty neutral switch or its related circuit
- Faulty TCM

Symptom/Fail-safe function:

- Gearshift function does not work

1. **Neutral Switch Line Open Circuit Inspection**

Disconnect the TCM 33P (Black) connector (page 13-63).
Remove the neutral switch terminal (page 13-63).
Check for continuity between the wire harness side TCM 33P (Black) connector [1] and neutral switch terminal [2].

CONNECTION: A32 – Light green

Is there continuity?

YES – GO TO STEP 2.

NO – Open circuit in the Light green wire

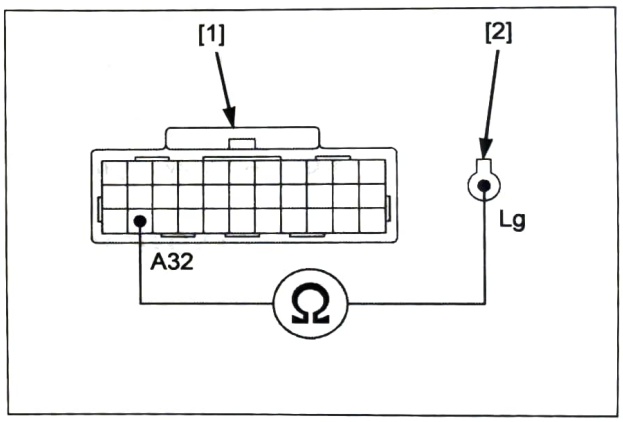

2. **Neutral Switch Line Short Circuit Inspection**

Check for continuity between the neutral switch terminal and ground.

CONNECTION: Light green – Ground

Is there continuity?

YES – Short circuit in the Light green wire

NO – GO TO STEP 3.

3. **Neutral Switch Inspection**

Replace the neutral switch with a new one.
Connect the disconnected connector(s).
Erase the DTC.
Turn the ignition switch ON with gearshift "N" position.
Shift the gearshift 1st position and wait for 10 seconds.
Recheck the DTC with MCS.

Is same DTC indicated?

YES – Replace the TCM with a new one, and recheck.

NO – Faulty original neutral switch

DTC P1700/DTC P1701

Probable cause:

- Faulty VS sensor or its related circuit
- Faulty inner mainshaft sensor or its related circuit
- Faulty outer mainshaft sensor or its related circuit
- Faulty TCM

Symptom/Fail-safe function:

- Gearshift function does not work

NOTE:

- When other DTC is displayed, together with P1700/P1701 first.

1. TCM Inspection

Replace the TCM with a new one.
Erase the DTC.
Run the motorcycle for a minute in each gear as follows:

- P1700: Drive the motorcycle in 1st, 3rd and 5th gear.
- P1701: Drive the motorcycle in 2nd, 4th and 6th gear.

Check the DTC with MCS.

Is same DTC indicated?

YES – Replace the main wire harness with a new one, and recheck.

NO – Faulty original TCM

DTC P1702/DTC P1703

Probable cause:

- Faulty TR sensor or its related circuit
- Faulty TCM

Symptom/Fail-safe function:

- Engine operates normally
- Gearshift function does not work

1. TR Sensor Input Voltage Inspection

Disconnect the TR sensor connector (page 13-60).
Turn the ignition switch ON.
Measure the voltage at the wire harness side TR sensor connector [1].

CONNECTION: Yellow (+) – Gray (–)

Is the voltage within 4.75 – 5.25 V?

YES – GO TO STEP 2.

NO –
- Open or short circuit in the Yellow wire
- Open circuit in the Gray wire
- If the wire is OK, replace the TCM with a new one, and recheck.

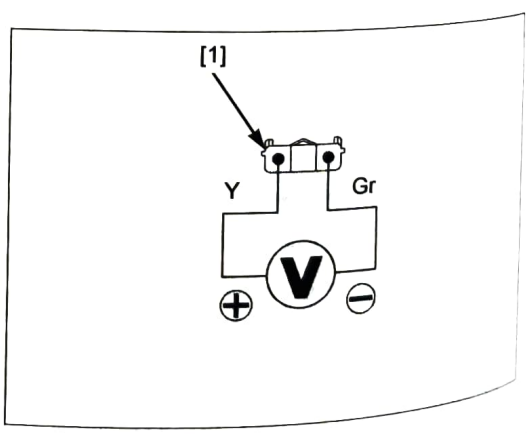

2. TR Sensor Signal Line Open Circuit Inspection

Disconnect the TCM 33P (Gray) connector (page 13-63).
Check for continuity between the wire harness side TR sensor connector [1] and TCM 33P (Gray) connector [2].

CONNECTION: White – B7

Is there continuity?

YES – GO TO STEP 3.

NO – Open circuit in the White wire

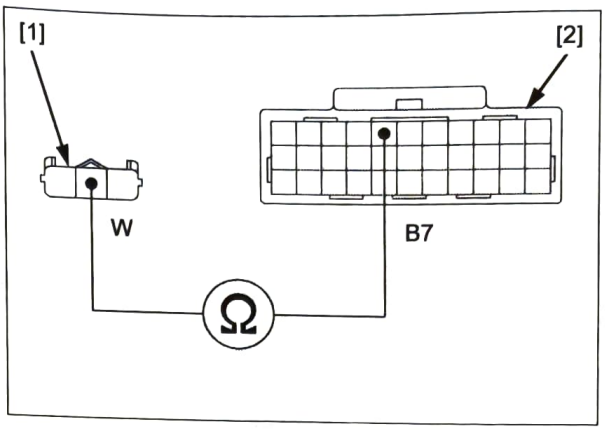

3. TR Sensor Output Line Short Circuit Inspection

Check for continuity between the wire harness side TR sensor connector [1] and ground.

CONNECTION: White – Ground

Is there continuity?

YES – Short circuit in the White wire

NO – GO TO STEP 4.

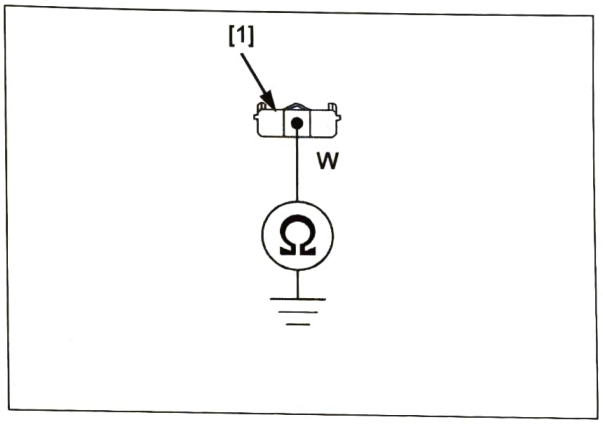

4. TR Sensor Inspection

Replace the TR sensor with a new one.
Connect the disconnected connector(s).
Erase the DTC.
Turn the ignition switch ON and wait for 10 seconds.
Check the DTC with MCS.

Is same DTC indicated?

YES – Replace the TCM with a new one, and recheck.

NO – Faulty original TR sensor

DTC P1704/DTC P1705/DTC P1706/ DTC P1707

Probable cause:

- Faulty No.1 clutch EOP sensor or its related circuit
- Faulty TCM

Symptom/Fail-safe function:

- Gearshift function does not work

1. Clutch EOP Sensor Input Voltage Inspection

Disconnect the following connectors:

– No.1 clutch EOP sensor connector (page 13-62)
– No.2 clutch EOP sensor connector (page 13-62)

Measure the voltage at the wire harness side clutch EOP sensor connector [1].

CONNECTION: Yellow/red (+) – Gray (–)

Is the voltage within 4.75 – 5.25 V?

YES – GO TO STEP 2.

NO – • Open or short circuit in the Yellow/red wire
• Open circuit in the Gray wire
• If the wire is OK, replace the TCM with a new one, and recheck.

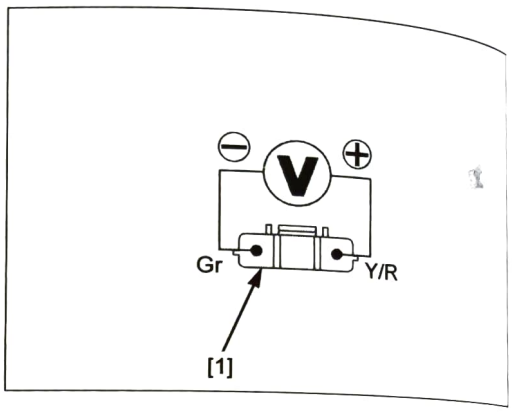

2. Clutch EOP Sensor Output Line Open Circuit Inspection

Disconnect the TCM 33P (Gray) connector (page 13-63).
Check for continuity between the wire harness side clutch EOP sensor connector [1] and TCM 33P (Gray) connector [2].

CONNECTION:
No.1 clutch EOP sensor:
Yellow/green – B19
No.2 clutch EOP sensor:
Black – B8

Is there continuity?

YES – GO TO STEP 3.

NO – • Open circuit in the Yellow/green wire
• Open circuit in the Black wire

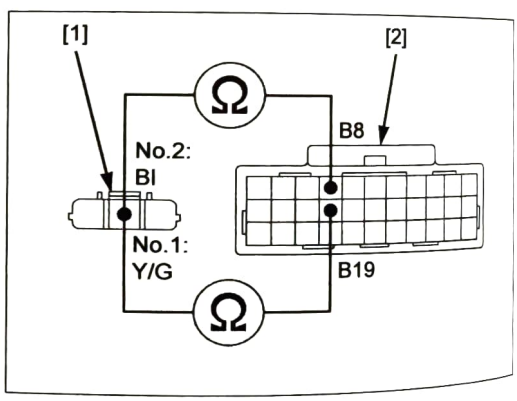

3. Clutch EOP Sensor Output Line Short Circuit Inspection

Check for continuity between the wire harness side clutch EOP sensor connector [1] and ground.

CONNECTION:
No.1 clutch EOP sensor:
Yellow/green – Ground
No.2 clutch EOP sensor:
Black – Ground

Is there continuity?

YES – • Short circuit in the Yellow/green wire
• Short circuit in the Black wire

NO – GO TO STEP 4.

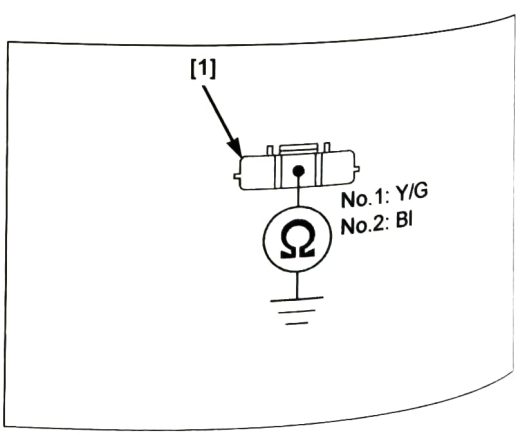

4. **Clutch EOP Sensor Inspection**

Replace the clutch EOP sensor with a new one.
Connect the disconnected connector(s).
Erase the DTC.
Turn the ignition switch ON and wait for 10 seconds.
Check the DTC with MCS.

Is same DTC indicated?

YES – Replace the TCM with a new one, and recheck.

NO – Faulty original clutch EOP sensor

DTC P1708/DTC P1709

Probable cause:

- Faulty shift spindle angle sensor or its related circuit
- Faulty TCM

Symptom/Fail-safe function:

- Gearshift function does not work

1. **Shift Spindle Angle Sensor Input Voltage Inspection**

Disconnect the shift spindle angle sensor connector (page 13-61).
Turn the ignition switch ON.
Measure the voltage at the wire harness side shift spindle angle sensor connector [1].

CONNECTION: Yellow (+) – Gray (–)

Is the voltage within 4.75 – 5.25 V?

YES – GO TO STEP 2.

NO – • Open or short circuit in the Yellow wire
• Open circuit in the Gray wire
• If the wire is OK, replace the TCM with a new one, and recheck.

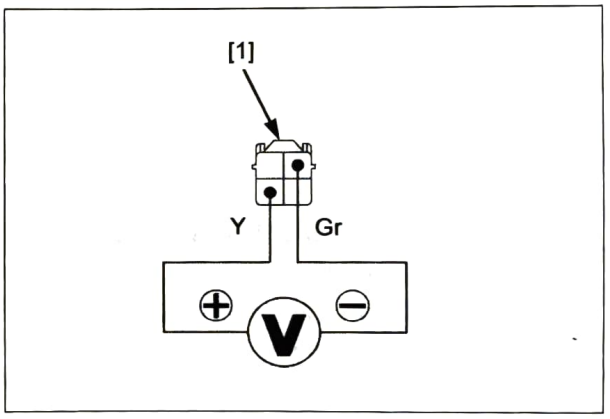

2. **Shift Spindle Angle Sensor Signal Line Open Circuit Inspection**

Turn the ignition switch OFF.
Disconnect the TCM 33P (Gray) connector (page 13-63).
Check for continuity between the wire harness side shift spindle angle sensor connector [1] and TCM 33P (Gray) connector [2].

CONNECTION: White – B20

Is there continuity?

YES – GO TO STEP 3.

NO – Open circuit in the White wire

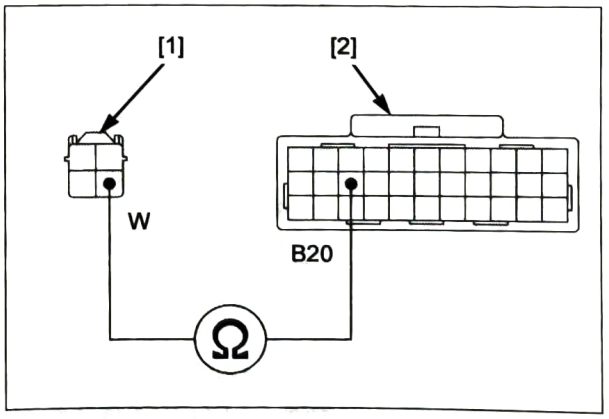

3. **Shift Spindle Angle Sensor Output Line Short Circuit Inspection**

Check for continuity between the wire harness side shift spindle angle sensor connector [1] and ground.

CONNECTION: White – Ground

Is there continuity?

YES – Short circuit in the White wire

NO – GO TO STEP 4.

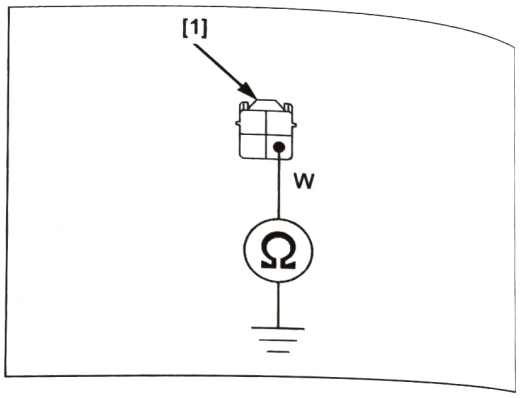

4. **Shift Spindle Angle Sensor Inspection**

Replace the shift spindle angle sensor with a new one.
Connect the disconnected connector(s).
Erase the DTC.
Turn the ignition switch ON and wait for 10 seconds.
Check the DTC with MCS.

Is same DTC indicated?

YES – Replace the TCM with a new one, and recheck.

NO – Faulty original shift spindle angle sensor

DTC P170A/DTC P170B

Probable cause:

- Faulty shift control motor or its related circuit
- Faulty TCM

Symptom/Fail-safe function:

- Gearshift function does not work

1. **Shift Control Motor Line Open Circuit Inspection**

Disconnect the following:

– TCM 33P (Black) connector (page 13-63)
– Shift control motor connector (page 13-52)

Check for continuity between the wire harness side shift control motor connector [1] and TCM 33P (Black) connector [2].

CONNECTION:

Blue – A1
Blue – A12
Yellow – A2
Yellow – A13

Is there continuity?

YES – GO TO STEP 2.

NO – • Open circuit in the Blue or Pink/blue wire
• Open circuit in the Yellow or Yellow/blue wire

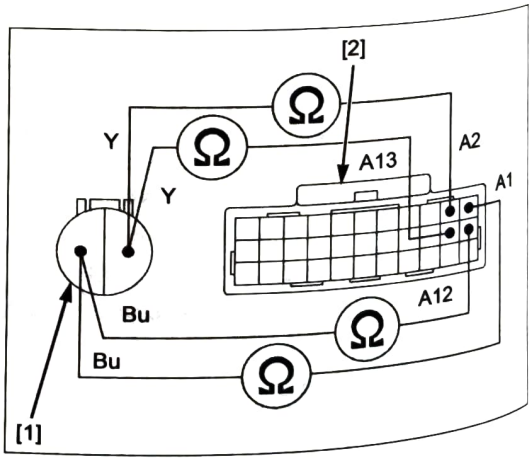

2. Shift Control Motor Line Short Circuit Inspection

Check for continuity between the wire harness side shift control motor connector [1] and ground.

CONNECTION:
Blue – Ground
Yellow – Ground

Is there continuity?

YES – • Short circuit in the Blue or Pink/blue wire
• Short circuit in the Yellow or Yellow/blue wire

NO – GO TO STEP 3.

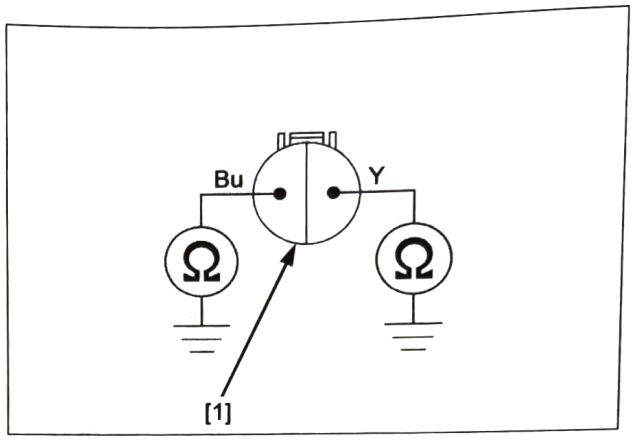

3. Shift Control Motor Inspection

Replace the shift control motor with a new one.
Connect the disconnected connector(s).
Erase the DTC.
Turn the ignition switch ON and wait for 10 seconds.
Check the DTC with MCS.

Is same DTC indicated?

YES – Replace the TCM with a new one, and recheck.

NO – Faulty original shift control motor

DTC P170F

Probable cause:

- Faulty TCM

Symptom/Fail-safe function:

- Gearshift system stops

1. TCM Inspection

Replace the TCM with a new one.
Erase the DTC.
Turn the ignition switch ON and wait for 10 seconds.
Check the DTC with MCS.

Is same DTC indicated?

YES – Replace the main wire harness with a new one, and recheck.

NO – Faulty original TCM

DTC P1713

Probable cause:

- Faulty shift spindle angle sensor
- Faulty gearshift mechanism (reduction gears)
- Faulty shift control motor
- Faulty shift spindle angle sensor installation status
- Faulty TCM

Symptom/Fail-safe function:

- Gearshift function does not work

1. **Shift Spindle Angle Sensor Inspection**

   Replace the shift spindle angle sensor with a new one.
   Erase the DTC.
   Drive the motorcycle using gears from 1st to 6th for a minute in each gear, and then drive the motorcycle using gears from 6th to 1st for a minute in each gear.
   Check the DTC with MCS.

   Is same DTC indicated?

   YES – Replace the TCM with a new one, and recheck.

   NO – Faulty original shift spindle angle sensor

DTC P1714

Probable cause:

- Faulty TR sensor
- Faulty gearshift mechanism (reduction gears)
- Faulty shift control motor
- Faulty TR sensor installation status
- Faulty TCM

Symptom/Fail-safe function:

- Gearshift function does not work

1. **TR Sensor Inspection**

   Replace the TR sensor with a new one.
   Erase the DTC.
   Drive the motorcycle using gears from 1st to 6th for a minute in each gear, and then drive the motorcycle using gears from 6th to 1st for a minute in each gear.
   Check the DTC with MCS.

   Is same DTC indicated?

   YES – Replace the TCM with a new one, and recheck.

   NO – Faulty original TR sensor

DTC P1716/DTC P1717

Probable cause:

- Faulty clutch line EOP sensor or its related circuit
- Faulty TCM

Symptom/Fail-safe function:

- Gearshift function does not work

1. Clutch Line EOP Sensor Input Voltage Inspection

Disconnect the clutch line EOP sensor connector (page 13-62).
Measure the voltage at the wire harness side clutch line EOP sensor connector [1].

CONNECTION: Yellow/red (+) – Gray (–)

Is the voltage within 4.75 – 5.25 V?

YES – GO TO STEP 2.

NO – • Open or short circuit in the Yellow/red wire
• Open circuit in the Gray wire
• If the wire is OK, replace the TCM with a new one, and recheck.

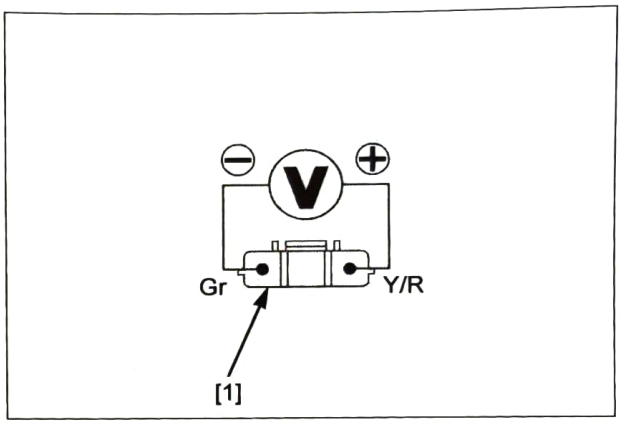

2. Clutch Line EOP Sensor Output Line Open Circuit Inspection

Disconnect the TCM 33P (Gray) connector (page 13-63).
Check for continuity between the wire harness side clutch line EOP sensor connector [1] and TCM 33P (Gray) connector [2].

CONNECTION: Red – B18

Is there continuity?

YES – GO TO STEP 3.

NO – Open circuit in the Red wire

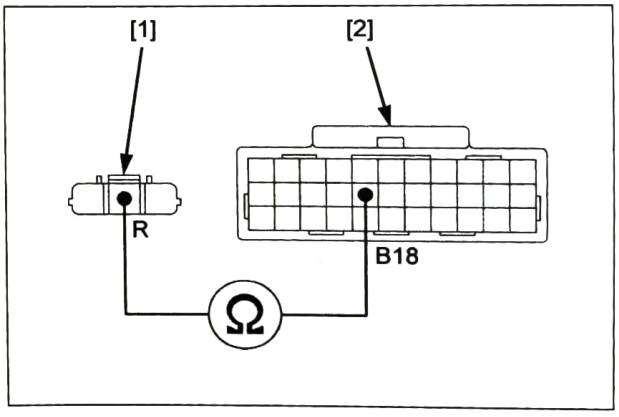

3. Clutch Line EOP Sensor Output Line Short Circuit Inspection

Check for continuity between the wire harness side clutch line EOP sensor [1] and ground.

CONNECTION: Red – Ground

Is there continuity?

YES – Short circuit in the Red wire

NO – GO TO STEP 4.

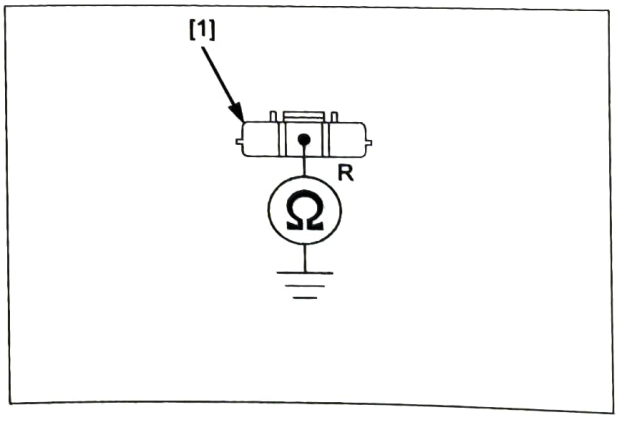

4. Clutch Line EOP Sensor Inspection

Replace the clutch line EOP sensor with a new one.
Connect the disconnected connector(s).
Erase the DTC.
Turn the ignition switch ON and wait for 10 seconds.
Check the DTC with MCS.

Is same DTC indicated?

YES – Replace the TCM with a new one, and recheck.

NO – Faulty original clutch line EOP sensor

DTC P1718

Probable cause:

- Engine oil level is low
- Faulty oil pump
- Faulty clutch oil filter or its oil circuit
- Faulty clutch line EOP sensor
- Faulty TCM

Symptom/Fail-safe function:

- Gearshift function does not work

1. Clutch Line EOP Sensor Inspection

Replace the clutch line EOP sensor with a new one.
Erase the DTC.
Drive the motorcycle using gears from 1st to 6th for a minute in each gear, and then drive the motorcycle using gears from 6th to 1st for a minute in each gear.
Check the DTC with MCS.

Is same DTC indicated?

YES – Replace the TCM with a new one, and recheck.

NO – Faulty original clutch line EOP sensor

DTC P1719

Probable cause:

- Faulty No.1 clutch
- Faulty VS sensor
- Faulty TCM

Symptom/Fail-safe function:

- Gearshift function does not work

1. No.1 Clutch Inspection

Replace the No.1 clutch assembly with a new one.
Erase the DTC.
Drive the motorcycle in 1st, 3rd and 5th gear for a minute in each gear.
Check the DTC with MCS.

Is same DTC indicated?

YES – Replace the TCM with a new one, and recheck.

NO – Faulty original No.1 clutch assembly

DTC P171A

Probable cause:

- Faulty No.2 clutch
- Faulty VS sensor
- Faulty TCM

Symptom/Fail-safe function:

- Gearshift function does not work

1. **No.2 Clutch Inspection**

   Replace the No.2 clutch assembly with a new one.
   Erase the DTC.
   Drive the motorcycle in 2nd, 4th and 6th gear for a minute in each gear.
   Check the DTC with MCS.

   Is same DTC indicated?

   YES – Replace the TCM with a new one, and recheck.

   NO – Faulty original No.2 clutch assembly

DTC P171B/DTC P171C

Probable cause:

- DTC P171B: Faulty No.1 clutch sticking
- DTC P171C: Faulty No.2 clutch sticking
- Faulty clutch oil circuit
- Faulty TCM

Symptom/Fail-safe function:

- Gearshift function does not work

1. **Clutch Inspection**

   Replace the clutch assembly with a new one.

   – DTC 171B: No.1 clutch assembly
   – DTC 171C: No.2 clutch assembly

   Erase the DTC.
   Drive the motorcycle using following gears for a minute in each gear.

   – DTC 171B: 1st, 3rd, 5th
   – DTC 171C: 2nd, 4th, 6th

   Check the DTC with MCS.

   Is same DTC indicated?

   YES – Replace the TCM with a new one, and recheck.

   NO – Faulty original clutch assembly

DTC P171D/DTC P171E/DTC P171F/ DTC P1720/DTC P1721/DTC P1722/ DTC P1723/DTC P1724/DTC P1725/ DTC P1726

Probable cause:

- Engine oil level is low
- Faulty oil pump
- Faulty clutch oil circuit
- Faulty clutch line EOP sensor
- Faulty TCM

Symptom/Fail-safe function:

- Gearshift function does not work

1. Clutch EOP Sensor Inspection

Replace the clutch EOP sensor with a new one.
Erase the DTC.
Drive the motorcycle using all gears for a minute in each gear.
Check the DTC with MCS.

Is same DTC indicated?

YES – Replace the TCM with a new one, and recheck.

NO – Faulty original clutch EOP sensor

DTC P1728/DTC P1729

Probable cause:

- Faulty gearshift mechanism
- Faulty TR sensor
- Faulty TCM

Symptom/Fail-safe function:

- Gearshift function does not work

Refer to DTC P1714 (page 13-26).

DTC P172C

Probable cause:

- Faulty N-D switch or its related circuit
- Faulty TCM

Symptom/Fail-safe function:

- N-D switch does not work

1. N-D Switch Signal Line Open Circuit Inspection

Disconnect the TCM 33P (Gray) connector (page 13-63).
Disconnect the right handlebar switch 12P connector (page 22-20).
Check for continuity between the wire harness side right handlebar switch 12P connector [1] and TCM 33P (Gray) connector [2].

CONNECTION: Violet – B31

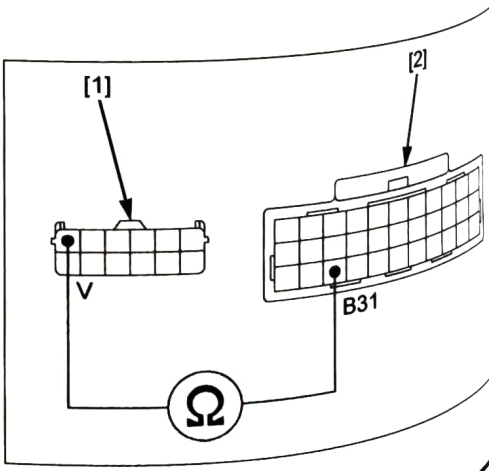

Is there continuity?

YES – GO TO STEP 2.

NO – Open circuit in the Violet wire

2. N-D Switch Signal Line Short Circuit Inspection

Check for continuity between the wire harness side right handlebar switch 12P connector [1] and ground.

CONNECTION: Violet – Ground

Is there continuity?

YES – Short circuit in the Violet wire

NO – GO TO STEP 3.

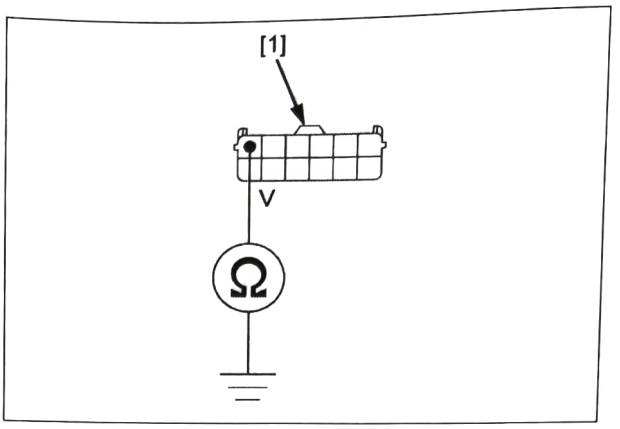

3. N-D Switch Ground Line Open Circuit Inspection

Disconnect the TCM 33P (Black) connector (page 13-63).
Check for continuity between the wire harness side right handlebar switch 12P connector [1] and 33P (Black) connector [2].

CONNECTION: Gray – A22

Is there continuity?

YES – GO TO STEP 4.

NO – Open circuit in the Gray wire

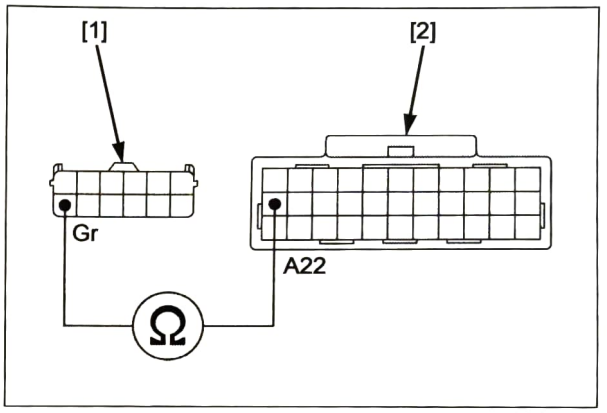

4. N-D Switch Inspection

Replace the right handlebar switch with a new one.
Connect the disconnected connector(s).
Erase the DTC.
Turn the ignition switch ON and wait for 10 seconds.
Check the DTC with MCS.

Is same DTC indicated?

YES – Replace the TCM with a new one, and recheck.

NO – Faulty original N-D switch

DTC P172D

Probable cause:

- Faulty shift switch or its related circuit
- Faulty TCM

Symptom/Fail-safe function:

- Shift switch does not work

1. Shift Switch Input Voltage Inspection

Disconnect the left handlebar switch 8P (Black) connector (page 22-19).
Turn the ignition switch ON.
Measure the voltage at the left handle switch 8P (Black) connector [1].

CONNECTION: Yellow/red – Ground

Is there continuity?

YES – GO TO STEP 2.

NO – Open circuit in the Yellow/red wire

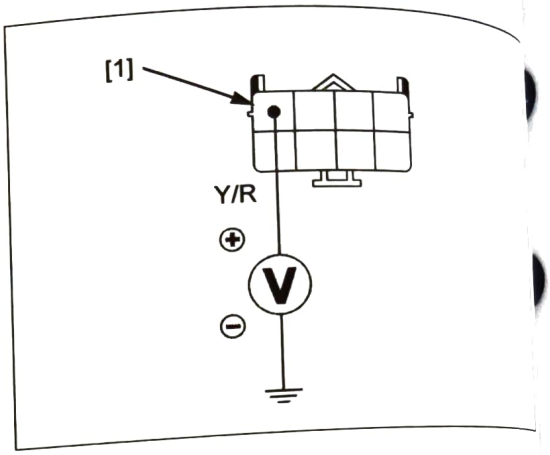

2. Shift Switch Signal Line Open Circuit Inspection

Disconnect the TCM 33P (Gray) connector (page 13-63).
Check for continuity between the wire harness side left handlebar switch 8P (Black) connector [1] and TCM 33P (Gray) connector [2].

CONNECTION:
Black – B28
Light green– B29

Is there continuity?

YES – GO TO STEP 3.

NO – Open circuit in the Black or Light green wire

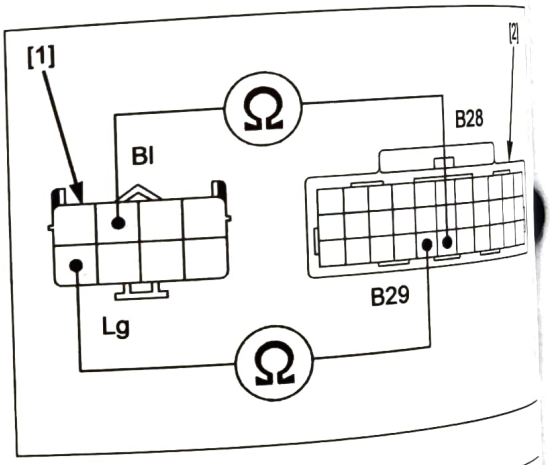

3. Shift Switch Signal Line Short Circuit Inspection

Check for continuity between the wire harness side left handlebar switch 8P (Black) connector [1] and ground.

CONNECTION:
Black – Ground
Light green– Ground

Is there continuity?

YES – Short circuit in the Black or Light green wire

NO – GO TO STEP 4.

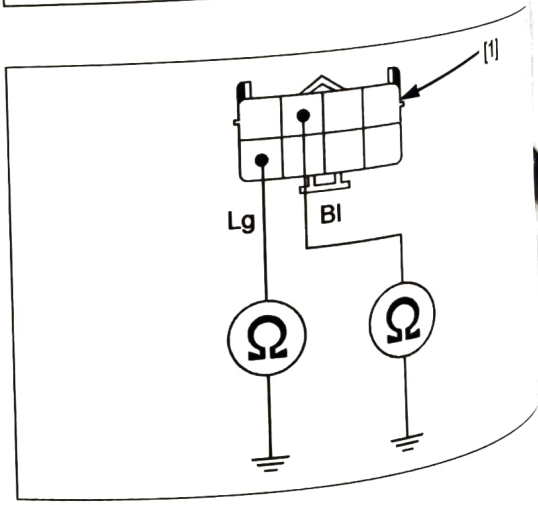

4. Shift Switch Inspection

Replace the left handlebar switch with a new one.
Connect the disconnected connector(s).
Erase the DTC.
Turn the ignition switch ON and wait for 10 seconds.
Check the DTC with MCS.

Is same DTC indicated?

YES – Replace the TCM with a new one, and recheck.

NO – Faulty original shift switch

DTC P172E

Probable cause:

- Faulty DCT relay or its related circuit
- Blown DCT-M 30 A fuse
- Faulty TCM

Symptom/Fail-safe function:

- DCT relay does not work

1. DCT Relay Input Voltage Inspection

Remove the DCT relay (page 13-65).
Turn the ignition switch ON.
Measure the voltage at the relay connector [1].
CONNECTION: Red/white (+) – Green (–)

Is there battery voltage?

YES – GO TO STEP 2.

NO – • Open circuit in the Red/white wire
• Open circuit in the Green wire

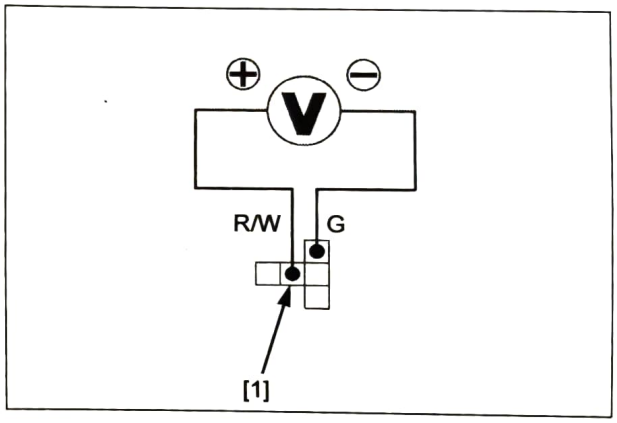

2. DCT Relay Output Line Open Circuit Inspection

Disconnect the TCM 33P (Black) connector (page 13-63).
Check for continuity between the wire harness side relay connector [1] and TCM 33P (Black) connector [2].
CONNECTION:
White – A3
White – A14

Is there continuity?

YES – GO TO STEP 3.

NO – Open circuit in the White wire

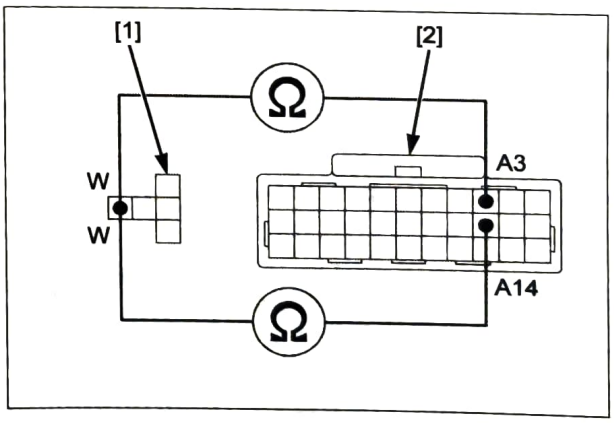

3. **DCT Relay Coil Input Line Open Circuit Inspection**

Disconnect the ECM 33P (Gray) connector (page 4-58).
Check for continuity between the wire harness side relay connector [1] and ECM 33P (Gray) connector [2].

CONNECTION: Yellow – Yellow (C9)

Is there continuity?

YES – GO TO STEP 4.

NO – Open circuit in the Yellow wire

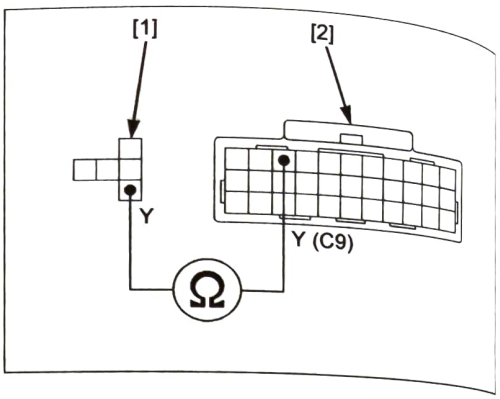

4. **DCT Relay Inspection**

Replace the DCT relay with a new one.
Connect the disconnected connector(s).
Erase the DTC.
Turn the ignition switch ON and wait for 10 seconds.
Check the DTC with MCS.

Is same DTC indicated?

YES – Replace the ECM with a new one, and recheck.

NO – Faulty original DCT relay

DTC P2159

Probable cause:

- Faulty rear wheel pulser ring
- Contaminated pulser ring (iron or other magnetic deposits)
- Faulty rear wheel speed sensor or its related circuit
- ABS modulator has DTC
- Faulty ECM

Symptom/Fail-safe function:

- Engine operates normally
- Cruise control does not operate

Refer to DTC P2158 troubleshooting (page 4-49).

DTC P2765

Probable cause:

- Electromagnetic interference
- Faulty outer mainshaft sensor or its related circuit
- Faulty TCM

Symptom/Fail-safe function:

- Gearshift function does not work

1. **Outer Mainshaft Sensor Input Voltage Inspection**

Disconnect the outer mainshaft sensor connector (page 13-60).
Temporarily install the removed electrical parts in the reverse order of removal.
Turn the ignition switch ON.
Measure the voltage at the wire harness side outer mainshaft sensor connector [1].

CONNECTION: Violet (+) – Gray (–)

Is there battery voltage?

YES – GO TO STEP 2.

NO – • Open or short circuit in the Violet wire
• Open circuit in the Gray wire
• If the wire is OK, replace the TCM with a new one, and recheck.

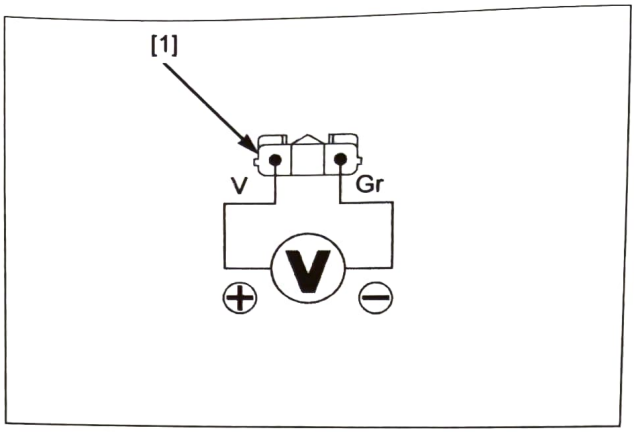

2. **Outer Mainshaft Sensor Output Line Open Circuit Inspection**

Disconnect the TCM 33P (Gray) connector (page 13-63).
Check for continuity between the wire harness side outer mainshaft sensor connector [1] and TCM 33P (Gray) connector [2].

CONNECTION: Pink – B25

Is there continuity?

YES – GO TO STEP 3.

NO – Open circuit in the Pink wire

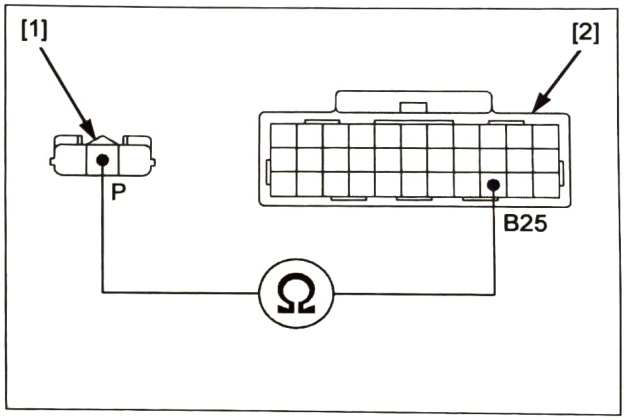

3. **Outer Mainshaft Sensor Output Line Short Circuit Inspection**

Check for continuity between the wire harness side outer mainshaft sensor connector [1] and ground.

CONNECTION: Pink – Ground

Is there continuity?

YES – Short circuit in the Pink wire

NO – GO TO STEP 4.

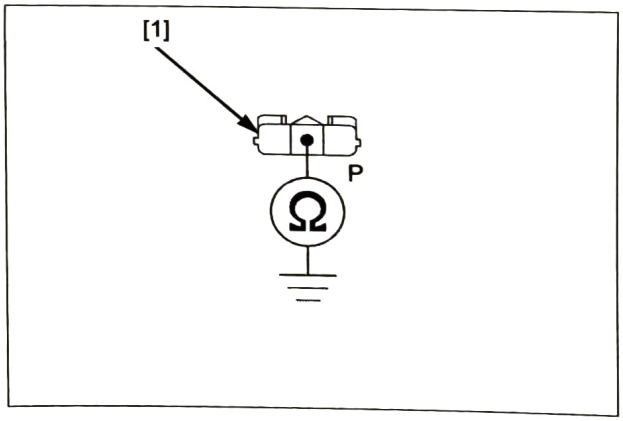

4. **Outer Mainshaft Sensor Inspection**

Replace the outer mainshaft sensor with a new one.
Erase the DTC.
Drive the motorcycle in 2nd, 4th and 6th gear for a minute in each gear.
Check the DTC with MCS.

Is same DTC indicated?

YES – Replace the TCM with a new one, and recheck.

NO – Faulty original outer mainshaft sensor

CLUTCH OIL FEED PIPE

REMOVAL

Remove the following:

- Clutch EOP sensor cover (page 2-10)
- Feed pipe cover bolts [1]
- Sealing washers [2]
- Feed pipe cover [3]
- O-ring [4]

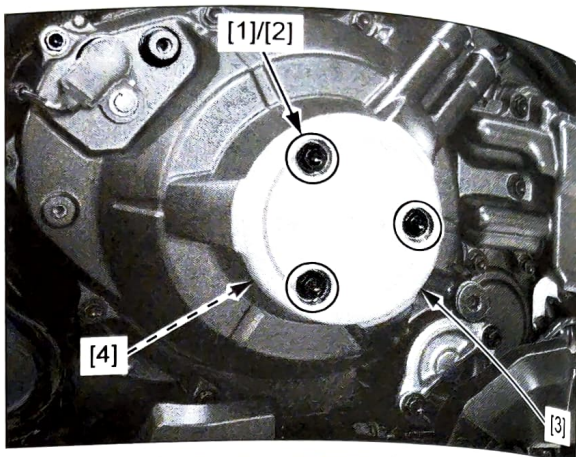

Remove the inner clutch oil feed pipe [1].

NOTE:

- Be careful not to bend or damage the inner clutch oil feed pipe.

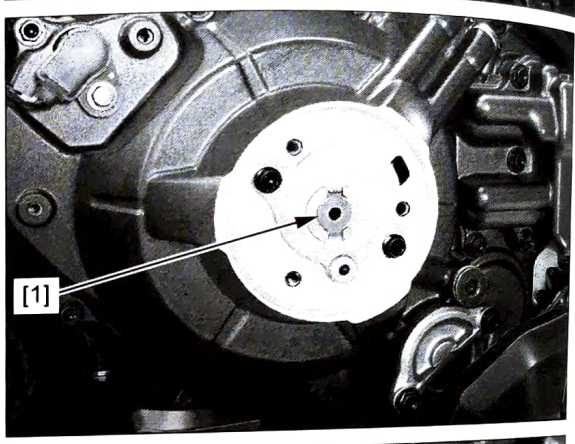

Remove the following:

- Feed pipe guide plate bolts [1]
- Feed pipe guide plate [2]
- O-rings [3]

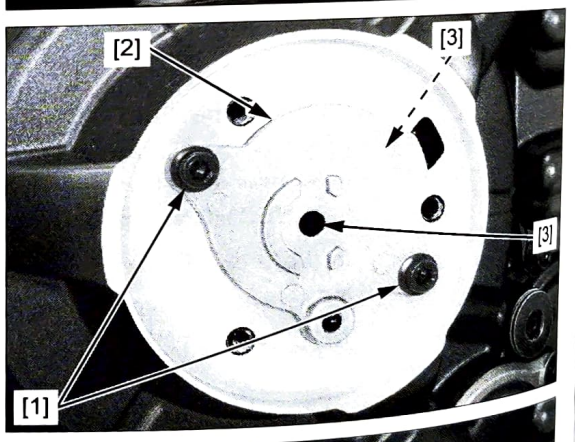

Remove the following:

- Outer clutch oil feed pipe [1]
- O-ring [2]

NOTE:

- Be careful not to bend or damage the outer clutch oil feed pipe.

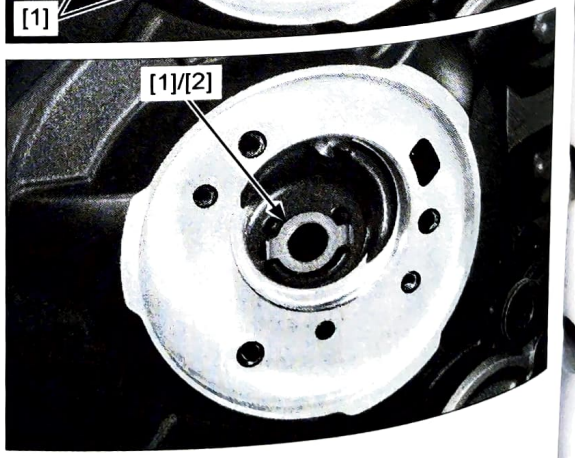

INSPECTION

Inspect the following parts for scratches, bending or clogging.

- Inner clutch oil feed pipe
- Outer clutch oil feed pipe

Measure each part according to DUAL CLUTCH TRANSMISSION SPECIFICATIONS (page 1-7).
Replace any part if it is out of the service limit.

INSTALLATION

Apply engine oil to a new O-ring.

Install the O-ring [1] to the outer clutch oil feed pipe [2].

Install the outer clutch oil feed pipe into the right crankcase cover.

NOTE:

- Align the feed pipe tabs with the right crankcase cover lugs.

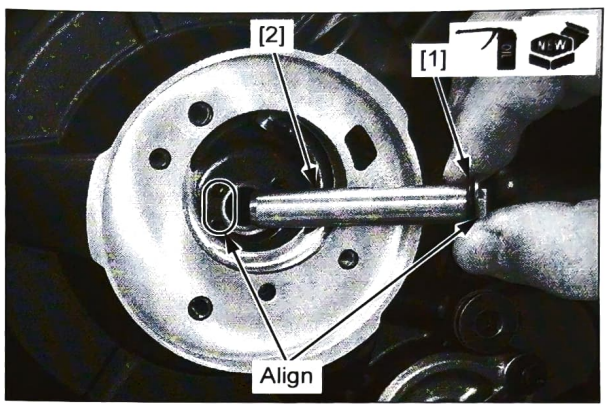

Apply engine oil to new O-rings.

Install the O-rings [1] to the feed pipe guide plate [2] grooves.

Install the feed pipe guide plate.

NOTE:

- Align the feed pipe guide plate pin with the right crankcase cover hole.

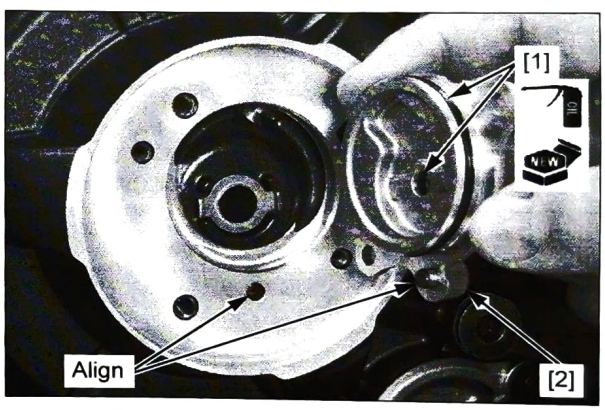

Install and tighten the feed pipe guide plate bolts [1] to the specified torque.

TORQUE: 5.0 N·m (0.5 kgf·m, 3.7 lbf·ft)

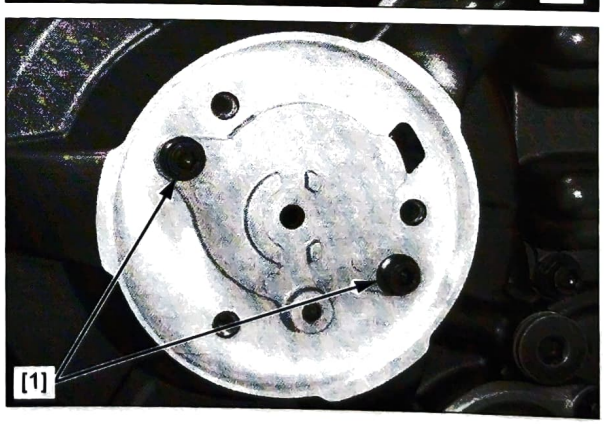

Install the inner clutch oil feed pipe [1] to the feed pipe guide plate.

NOTE:

- Align the feed pipe tabs with the guide plate lugs.

Apply engine oil to a new O-ring.

Install the O-ring [2] to the feed pipe cover [3] groove.

Install the feed pipe cover.

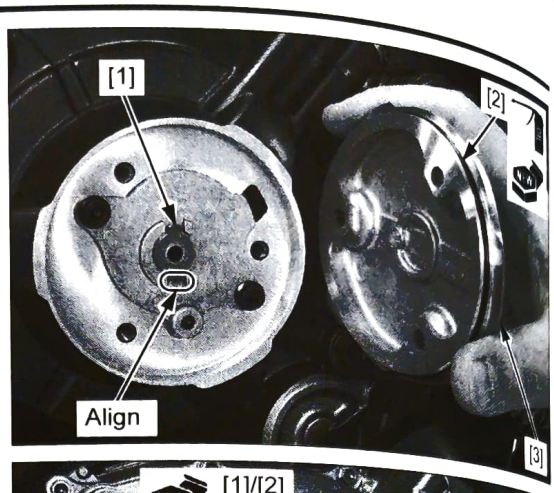

Install the following:

- New sealing washers [1]
- Feed pipe cover bolts [2]

Tighten the feed pipe cover bolts to the specified torque.

TORQUE: 12 N·m (1.2 kgf·m, 9 lbf·ft)

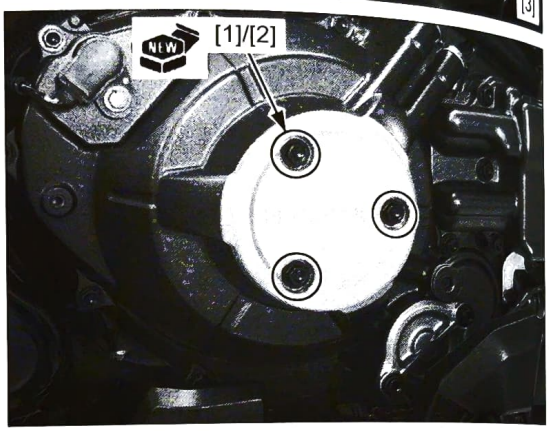

RIGHT CRANKCASE COVER

REMOVAL

Drain the engine oil (page 3-12).
Drain the coolant (page 8-5).

Remove the following:

- Clutch EOP sensor cover (page 2-10)
- Clutch oil feed pipe (page 13-36)
- Right rider foot peg bracket (page 19-13)
- Shift spindle angle sensor bolt [1]
- Shift spindle angle sensor [2]
- O-ring [3]

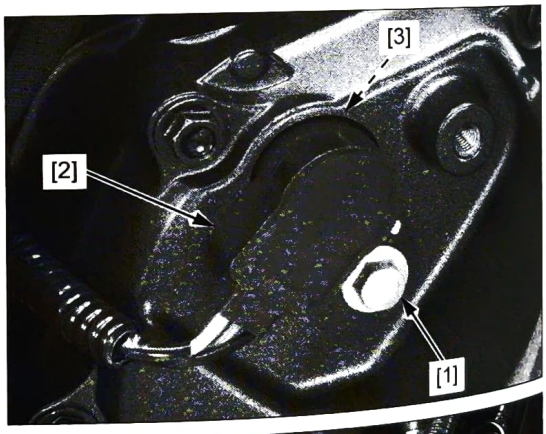

Disconnect the following:

- Clutch line EOP sensor 3P (Gray) connector [1]
- No.1 clutch EOP sensor 3P (Gray) connector [2]
- No.2 clutch EOP sensor 3P (Black) connector [3]

Remove the clutch EOP sensor wire stay bolt [4] and stay [5].

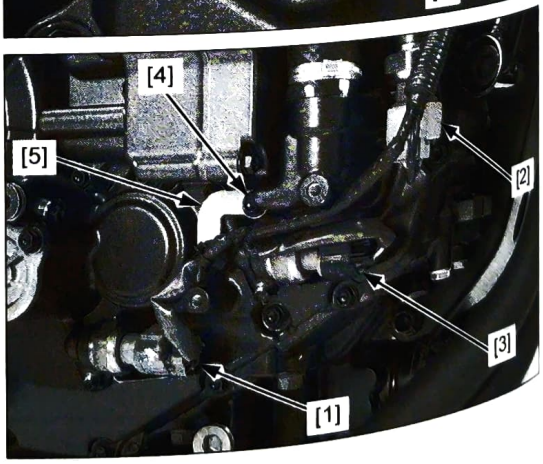

Open the clamps [1].

Release the following from the guides [2]:

- Linear solenoid valve wire [3]
- Main wire harness [4]
- Right A/F sensor harness [5]

Disconnect the linear solenoid valve 4P (Black) connector [6].

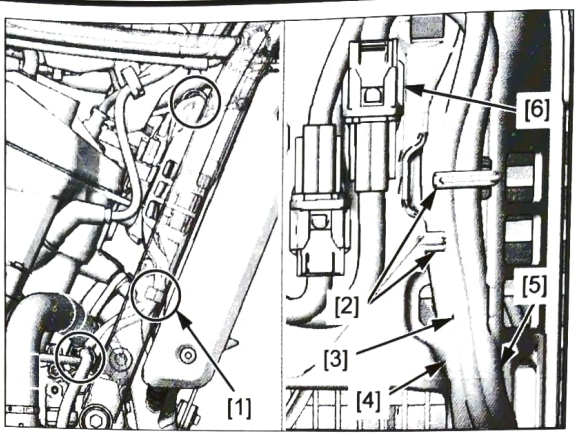

Disconnect the lower radiator hose from the radiator (page 8-7).

Remove the water pipe mounting bolts [1].

Disconnect the water pipe [2] from the right crankcase cover.

Remove the O-ring [3] from the water pipe.

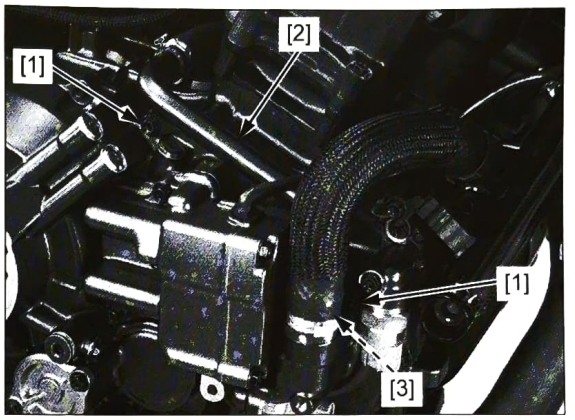

Remove the right crankcase cover bolts [1].

Remove the right crankcase cover [2].

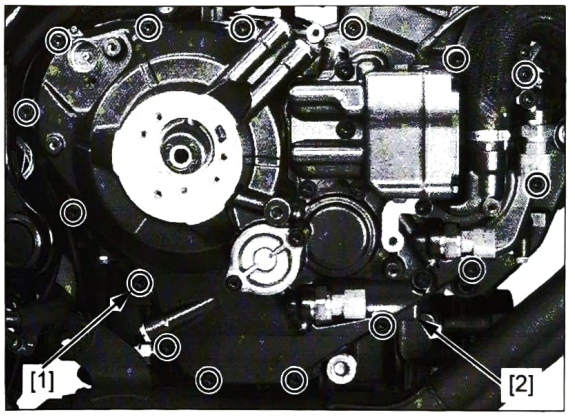

Remove the gasket [1], dowel pins [2], and oil joint [3].

Remove the O-rings [4] and back up rings [5] from the oil joint.

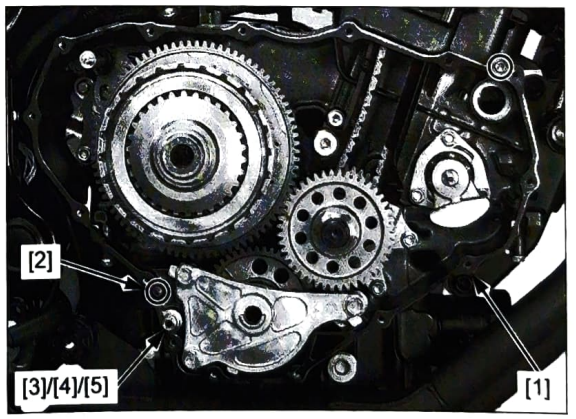

Remove the O-ring [1].

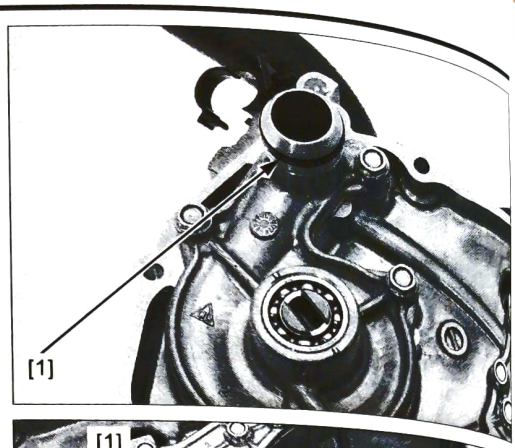

Check the bearings [1] and replace if necessary (page 13-40).

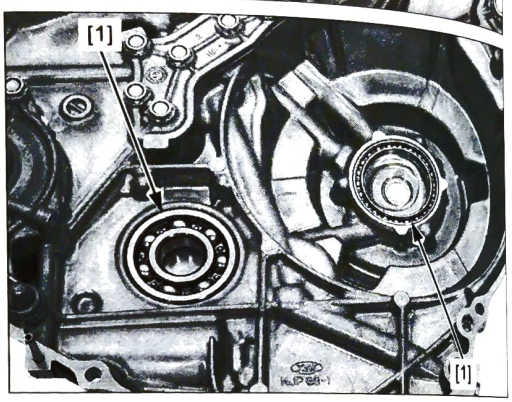

BEARING REPLACEMENT

Remove the bearing (40 x 52 x 7 mm) [1] using the below special tools.

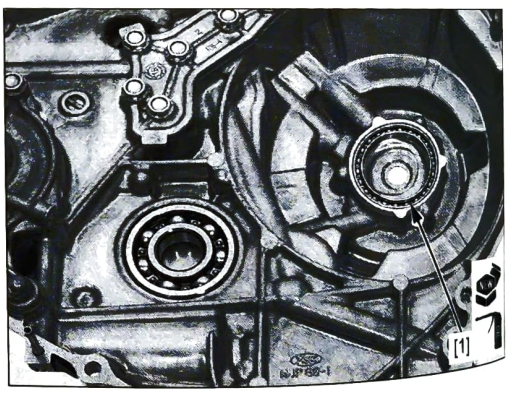

TOOLS:	
Remover weight	**07741-0010201**
Bearing remover shaft	**07JAC-PH80200**
Adjustable bearing puller, 20 – 40 mm	**07JAC-PH80100**
U.S.A. TOOLS:	
Remover weight	**07936-371020A or commercially available 3/8" x 16 slide hammer**
Adjustable bearing puller, 25 – 40 mm	**07736-A01000B with 07YAC-001A200**

Apply engine oil to a new bearing (40 x 52 x 7 mm). Drive in the bearings until it is fully seated using the below special tools.

TOOLS:	
Driver	**07749-0010000**
Attachment, 52 x 55 mm	**07746-0010400**
Pilot, 40 mm	**07746-0040900**

NOTE:

- Drive in the bearing (40 x 52 x 7 mm) with the marking side facing up.

Remove the bearing (6304) [1] using the below special tools.

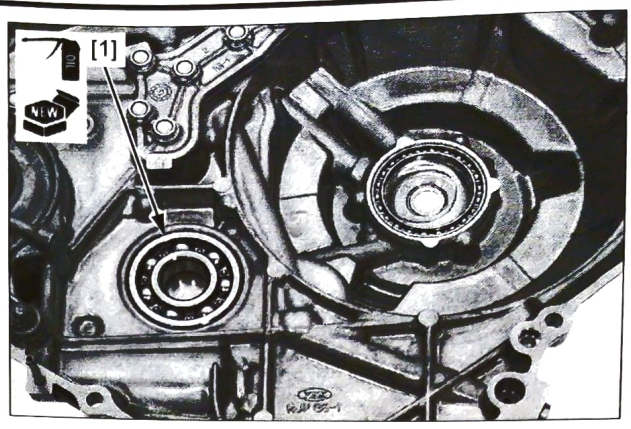

TOOLS:

Remover weight	**07741-0010201 or 07936-371020A (U.S.A. only) or commercially available 3/8" x 16 slide hammer (U.S.A. only)**
Bearing remover set, 20 mm	**07936-3710600**
Remover handle	**07936-3710100**

Apply engine oil to a new bearing (6304).
Drive in the bearing (6304) until it is fully seated using the below special tools.

TOOLS:

Driver	**07749-0010000**
Attachment, 52 x 55 mm	**07746-0010400**
Pilot, 20 mm	**07746-0040500**

NOTE:

- Drive in the bearing (6304) with the marking side facing up.

INSTALLATION

Clean the right crankcase cover mating surfaces thoroughly.

Apply liquid sealant (TB1207B manufactured by Three Bond or equivalent) to the right crankcase cover mating surface as shown.

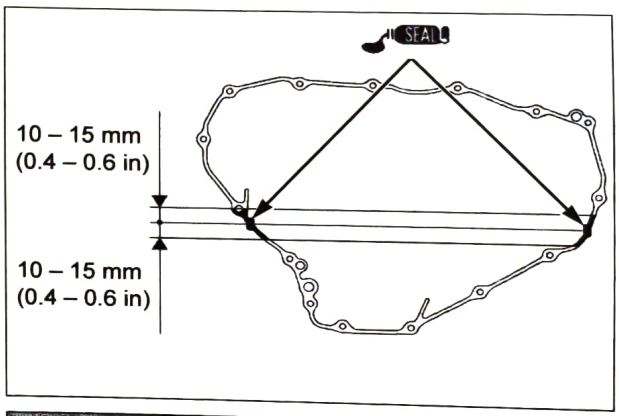

Apply engine oil to new O-rings [1] and new back up rings [2] and install them onto the oil joint [3] as shown.

Install the oil joint into the crankcase hole.

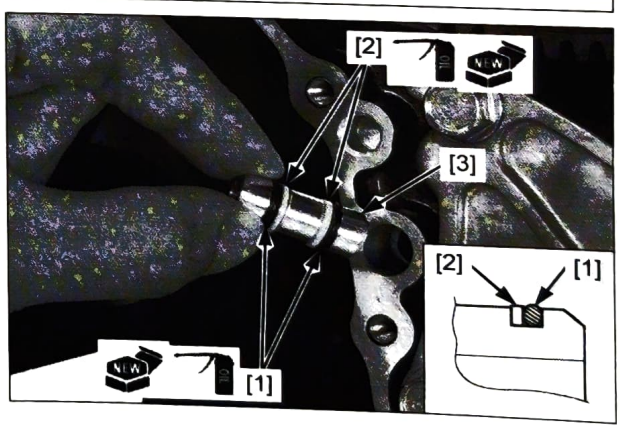

Coat a new O-ring [1] with engine oil and install it onto the groove of the water pump cover.

Align the water pump shaft slit with the water pump cover index lines by rotating the water pump shaft.

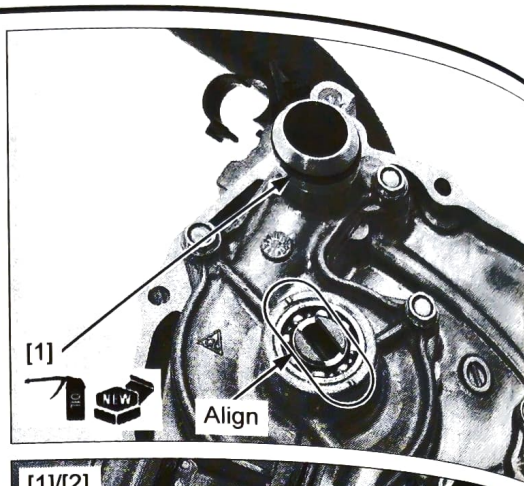

Align the following by rotating the crankshaft:

- Primary drive gear index line [1]
- Crankcase "▽" mark [2]

Make sure that the front balancer shaft end [3] is in position as shown.

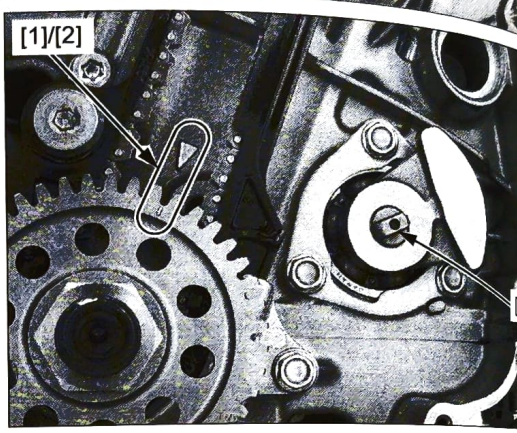

Install the dowel pins [1] and new gasket [2].

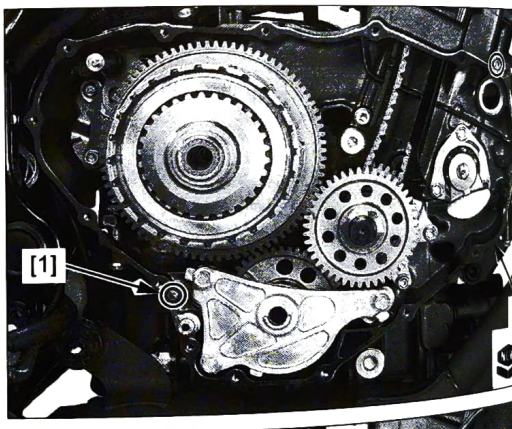

Install the right crankcase cover [1].

Install the right crankcase cover bolts [2].

Tighten the right crankcase cover bolts in a crisscross pattern in 2 or 3 steps to the specified torque.

TORQUE: 12 N·m (1.2 kgf·m, 9 lbf·ft)

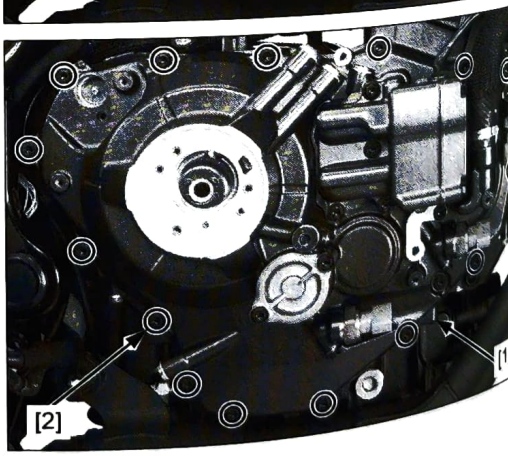

Coat a new O-ring with engine oil.

Install the O-ring [1] onto the water pipe [2].

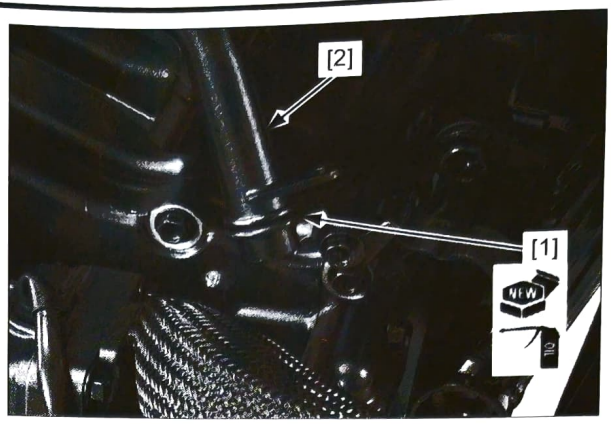

Connect the water pipe [1] to the right crankcase cover.

Install and tighten the water pipe mounting bolts [2] to the specified torque.

TORQUE: 12 N·m (1.2 kgf·m, 9 lbf·ft)

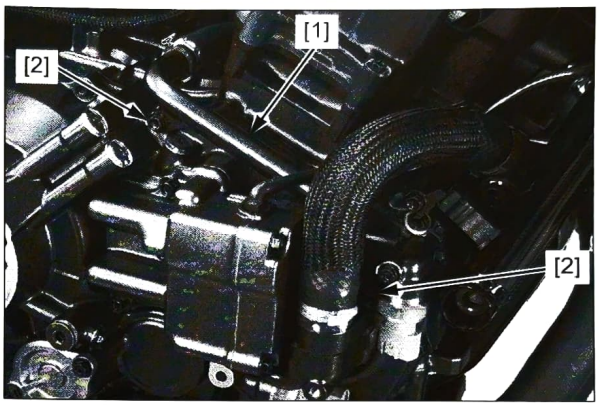

Connect the lower radiator hose from the radiator (page 8-7).

Connect the linear solenoid valve 4P (Black) connector [1].

Install the following to the guides [2]:

- Linear solenoid valve wire [3]
- Main wire harness [4]
- Right A/F sensor harness [5]

Clamp the following with the clamps [6].

- Linear solenoid valve wire
- Main wire harness
- Right A/F sensor harness

NOTE:

- Route the wire properly (page 1-27).

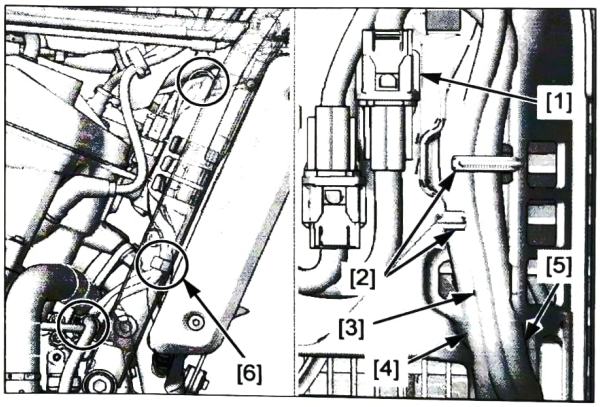

Install the stay [1] and clutch EOP sensor wire stay bolt [2].

Tighten the clutch EOP sensor wire stay bolt to the specified torque.

TORQUE: 12 N·m (1.2 kgf·m, 9 lbf·ft)

Connect the following:

- Clutch line EOP sensor 3P (Gray) connector [3]
- No.1 clutch EOP sensor 3P (Gray) connector [4]
- No.2 clutch EOP sensor 3P (Black) connector [5]

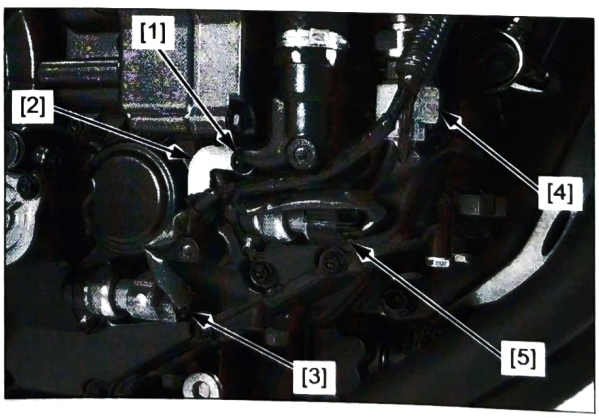

Apply engine oil to a new O-ring [1].

Install the O-ring onto the shift spindle angle sensor [2].

Install the shift spindle angle sensor.

NOTE:
- Align the flat surfaces of the shift spindle angle sensor and gearshift spindle end.

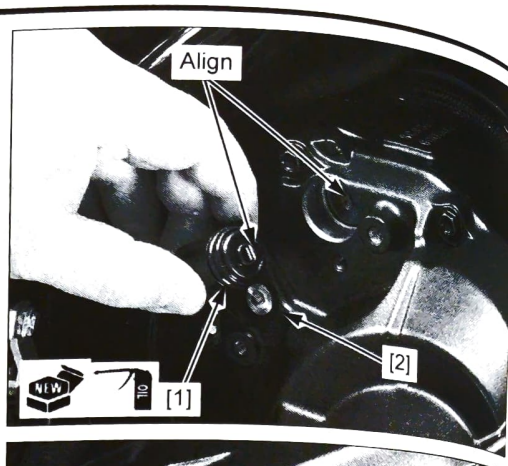

Install and tighten the shift spindle angle sensor bolt [1] to the specified torque.

TORQUE: 12 N·m (1.2 kgf·m, 9 lbf·ft)

NOTE:
- Route the hoses and wires properly (page 1-27).

Install the clutch oil feed pipe (page 13-36).
Install the clutch EOP sensor cover (page 2-10).

Fill the engine with the recommended engine oil and check that there are no oil leaks (page 3-12).
Fill the recommended coolant mixture to the filler neck and bleed the air (page 8-5).

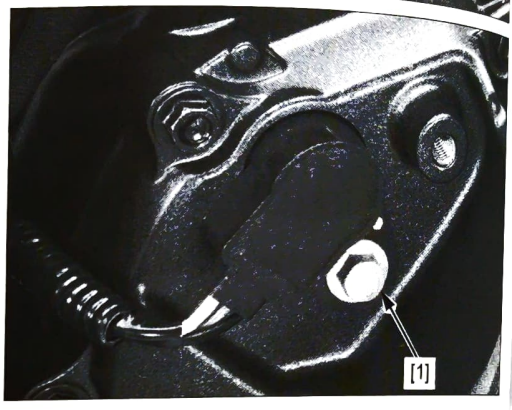

LINEAR SOLENOID VALVE

REMOVAL

NOTE:
- Keep dust and dirt away from all the parts.
- Be careful not to damage the mating surfaces of the valve body components.

Drain the engine oil (page 3-12).

Remove the clutch EOP sensor cover (page 2-10).

Open the clamps [1] and release the linear solenoid valve wire [2] from the clamps and guides [3].

Disconnect the linear solenoid valve 4P (Black) connector [4].

NOTE:
- When disconnecting the right A/F sensor 4P connector and linear solenoid valve 4P (Black) connector at the same time, mark the main wire harness side connectors to prevent misconnection.

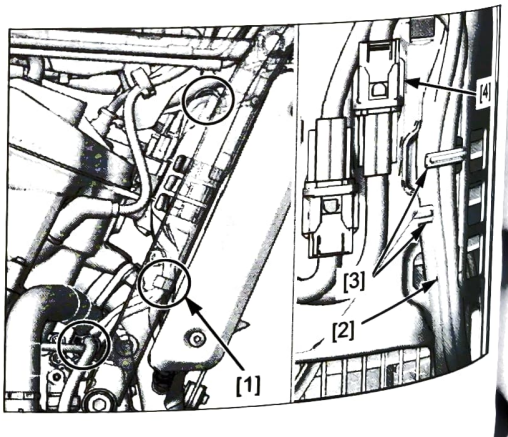

Remove the linear solenoid valve body mounting bolts [1] and linear solenoid valve body [2].

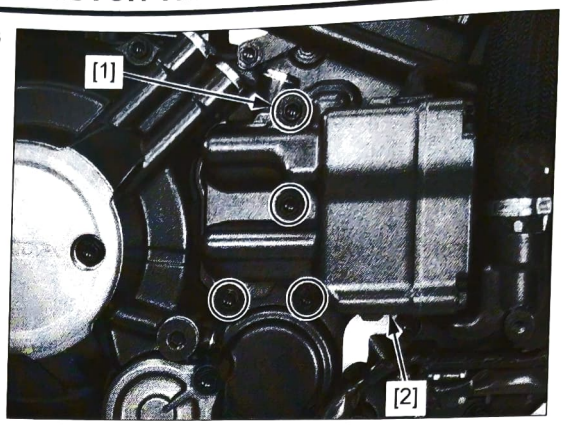

Remove the following:

- Separator plate [1]
- Dowel pins [2]
- O-rings [3]
- Spool valve filter/packing [4]

Remove the packing from the spool valve filter.
Check the spool valve filter and replace if necessary.

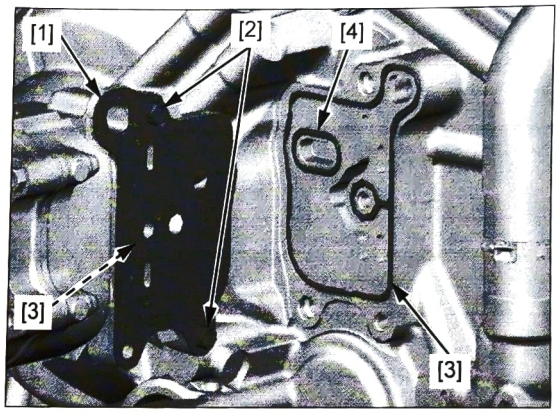

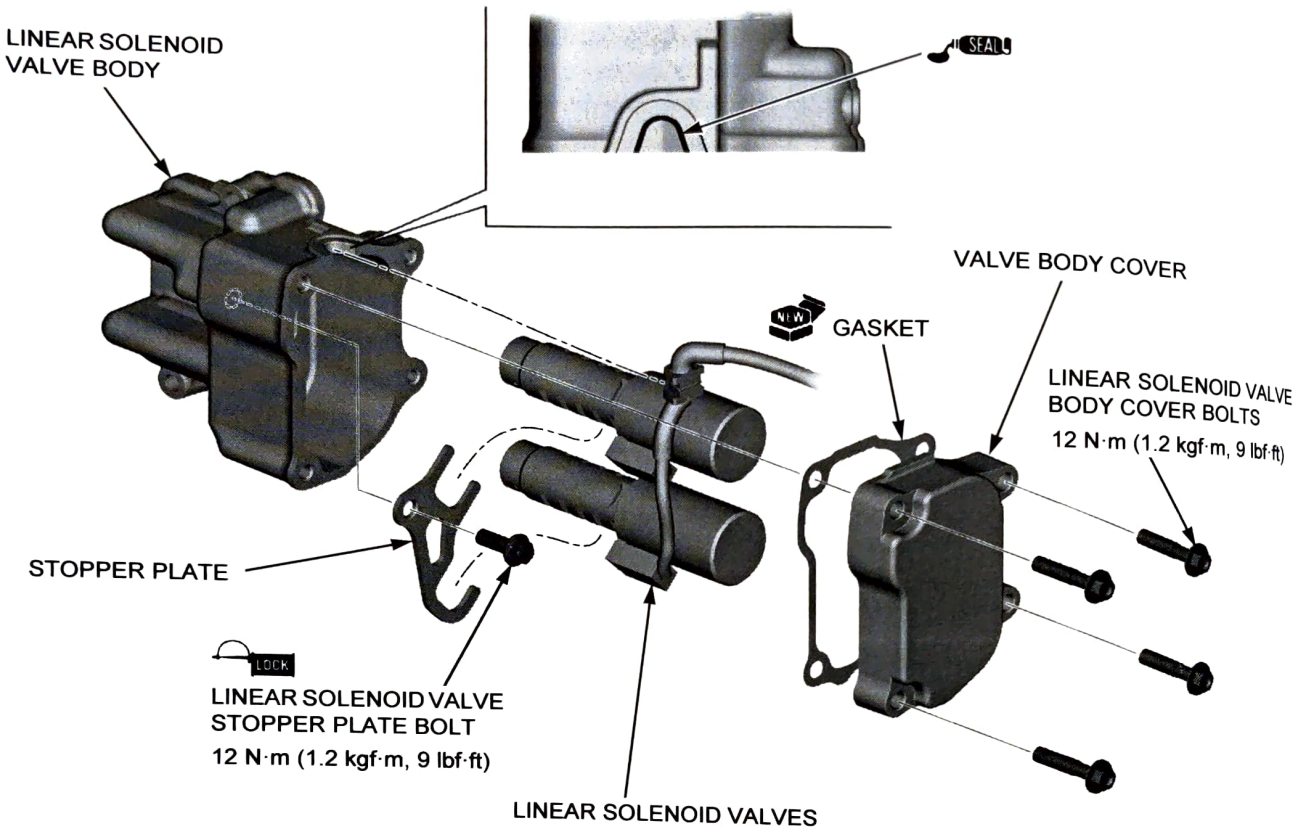

NOTE:

- Clean all the parts with compressed air. Make sure that there is no dust or lint on any parts.
- Apply locking agent to the solenoid valve stopper plate bolt threads (page 1-11).
- Apply liquid sealant (TB1207B manufactured by ThreeBond or equivalent) to the grommet mating surface of the valve body as shown.

INSTALLATION

Coat a new O-ring with engine oil.

Install the following to the linear solenoid valve body.

– O-ring [1]
– Dowel pins [2]
– Separator plate [3]

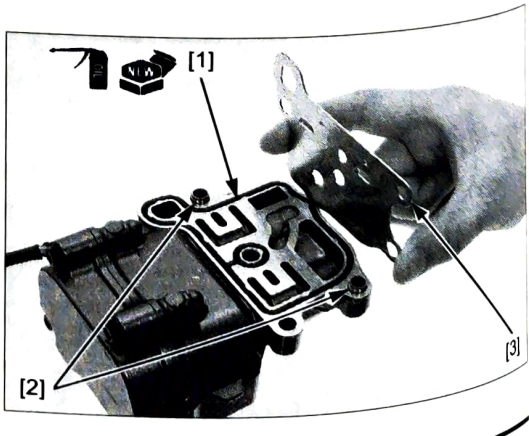

Coat a new packing [1] with engine oil.

Install the packing to the spool valve filter [2].

Install the spool valve filter/packing onto the right crankcase cover as shown.

Coat a new O-ring with engine oil.

Install the O-ring [3].

Install the linear solenoid valve body [4].

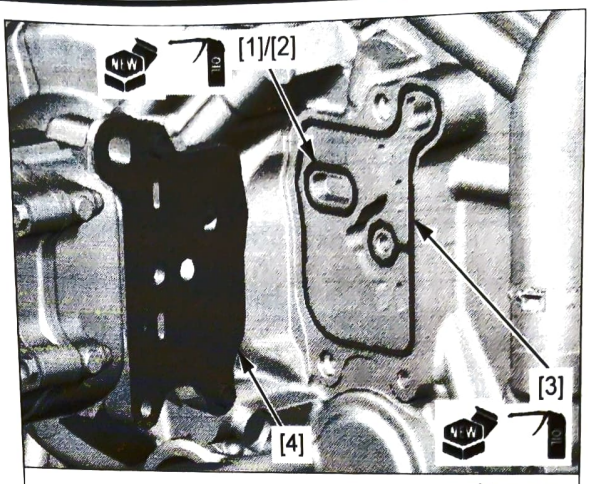

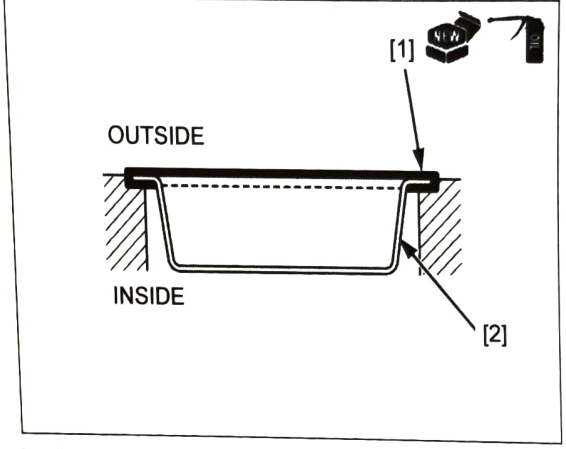

Install and tighten the linear solenoid valve body mounting bolts [1] to the specified torque.

TORQUE: 12 N·m (1.2 kgf·m, 9 lbf·ft)

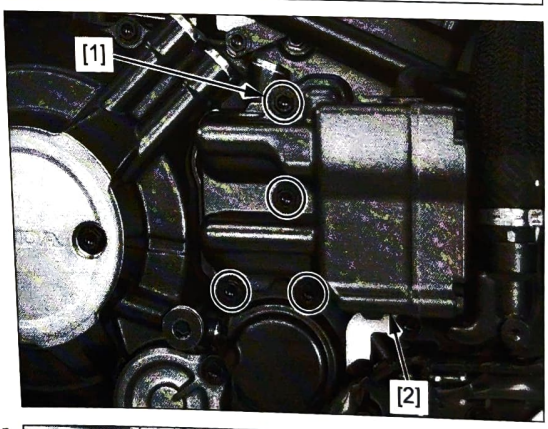

Connect the linear solenoid valve 4P (Black) connector [1].

Install the following to the guides [2]:

- Linear solenoid valve wire [3]
- Main wire harness [4]
- Right A/F sensor harness [5]

Clamp the following with the clamps [6].

- Linear solenoid valve wire
- Main wire harness
- Right A/F sensor harness

NOTE:

- Route the wire properly (page 1-27).

Install the clutch EOP sensor cover (page 2-10).

Fill the engine with the recommended engine oil and check that there are no oil leaks (page 3-12).

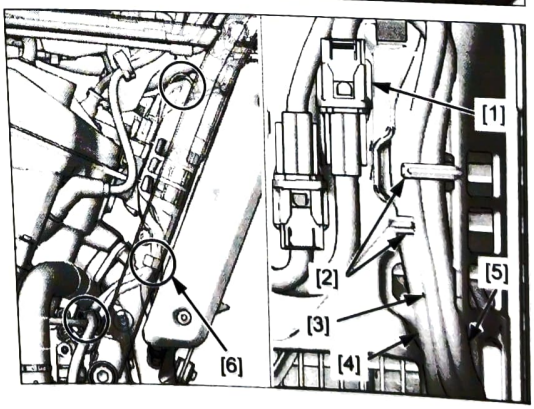

DUAL CLUTCH/PRIMARY DRIVEN GEAR

REMOVAL

Remove the primary drive gear (page 13-51).

Remove the dual clutch assembly [1] from the mainshaft.

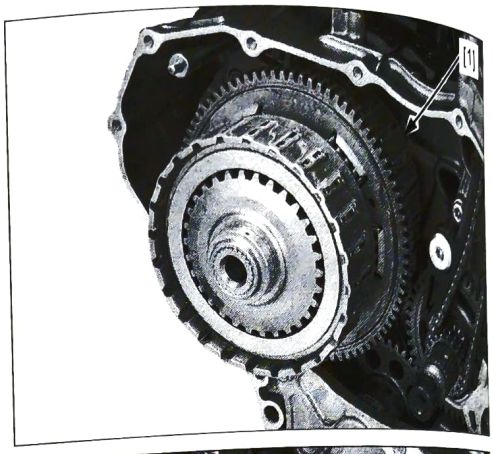

Remove the seal rings [1] from the mainshaft grooves.

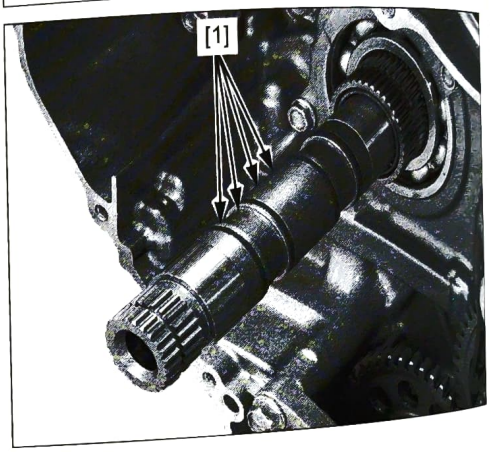

DISASSEMBLY

Remove the following from the clutches.

- Clutch 1 guide [1]
- Clutch 2 guide [2]
- Washers [3]

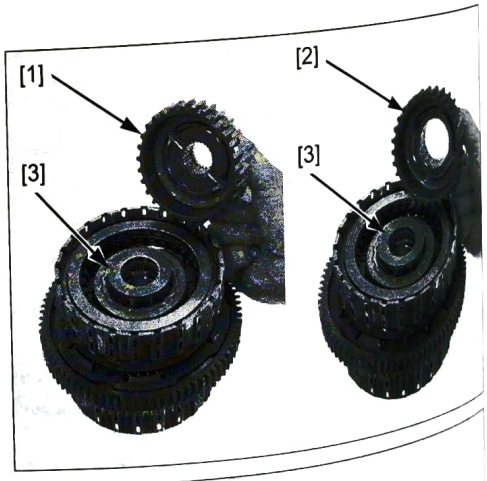

Remove the following from the primary driven gear:

- No.1 Clutch assembly [1]
- No.2 Clutch assembly [2]
- O-rings [3]

NOTE:

- Do not disassemble the clutch assembly.
- The No.1 clutch assembly and No.2 clutch assembly are the same parts.

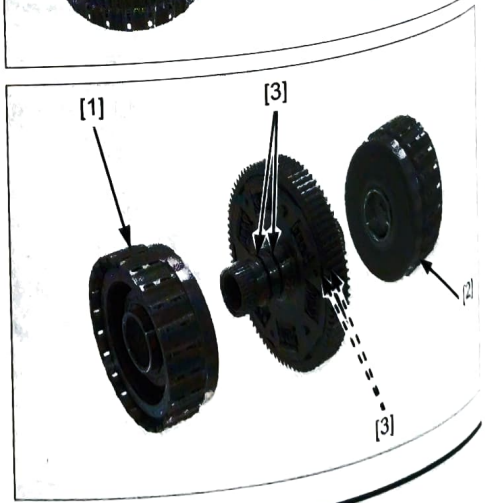

CLUTCH INITIAL CLEARANCE

Set a dial indicator on the end plate [1] with the plate lowered.
Lift the end plate against the snap ring and read the clearance, and record it.

Perform this inspection at the three points 120° apart.

SERVICE LIMIT: 1.3 mm (0.05 in)

If the measured valve exceeds the service limit, replace the clutch assembly.

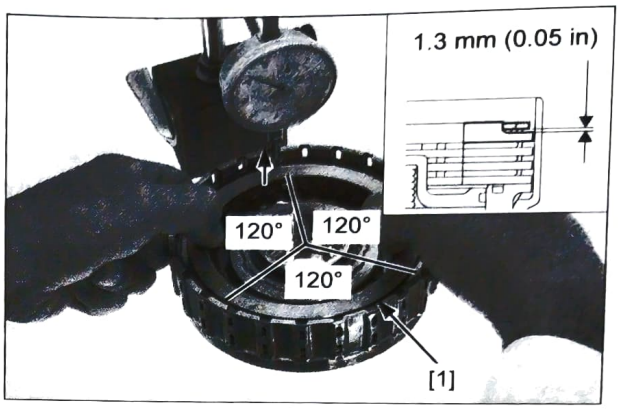

ASSEMBLY

Coat new O-rings with engine oil.

Install the O-rings [1] into the grooves of the primary driven gear [2].

Apply molybdenum oil solution to the primary driven gear teeth, friction springs, and boss sliding area.

Install the No.1 clutch assembly [3] and No.2 clutch assembly [4] to the primary driven gear.

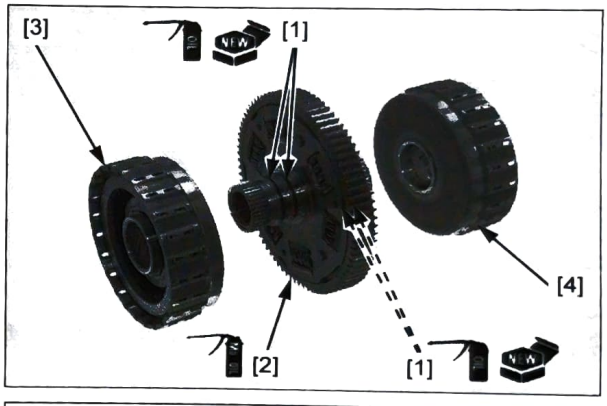

The clutch guides are different shapes as shown.

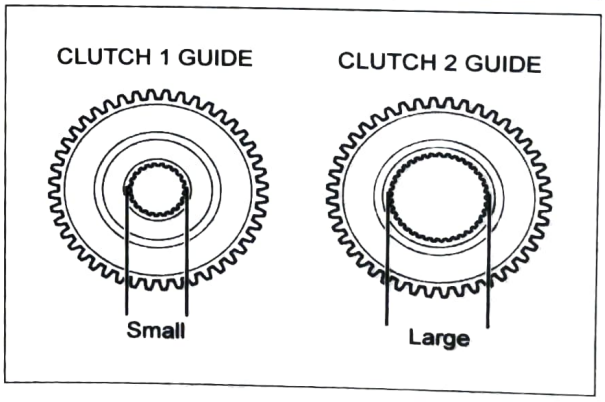

Place the dual clutch assembly [1] with the index line [2] of the primary driven gear facing up.

Apply engine oil to the needle bearings in the primary driven gear.

Line up the tabs [3] of the clutch discs [4].

Install the washer [5] onto the clutch assembly.

Install clutch 1 guide [6] into the clutch on the index line side by aligning the gear teeth with the clutch disc tabs.

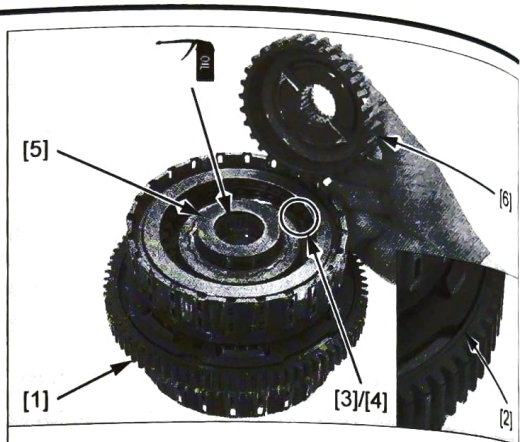

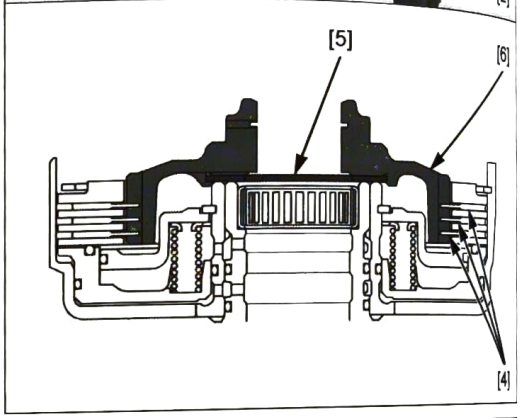

Turn over the dual clutch assembly while holding clutch 1 guide.

Apply engine oil to the needle bearings in the primary driven gear.

Line up the tabs [1] of the clutch discs [2].

Install the washer [3] onto the clutch assembly.

Install clutch 2 guide [4] into the clutch by aligning the gear teeth with the clutch disc tabs.

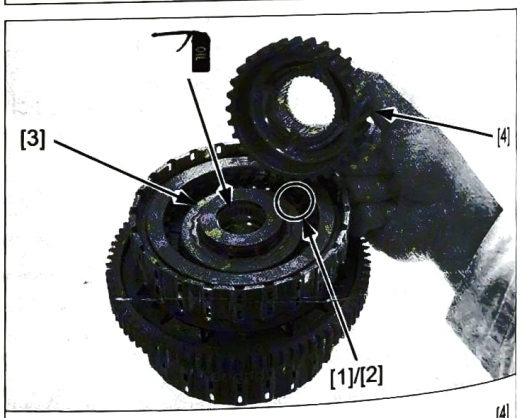

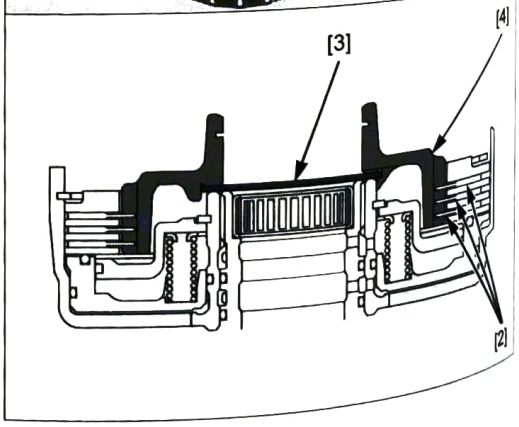

INSTALLATION

Apply engine oil to new seal rings.

Install the new seal rings [1] into the mainshaft grooves.

Push in the seal rings to seat them into the grooves as shown.

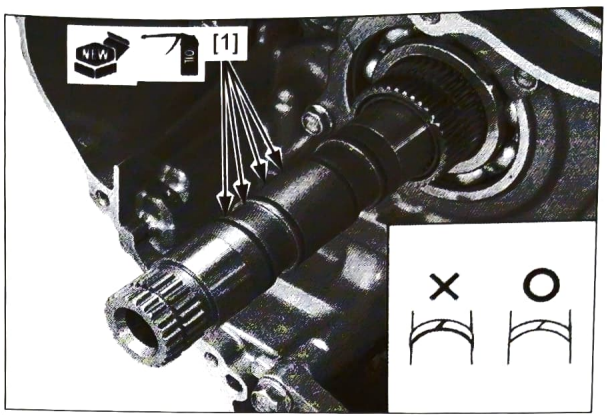

Install the dual clutch assembly [1] onto the mainshaft.

NOTE:

- The dual clutch assembly should be installed with the index line [2] facing the outside of the engine.
- Be careful not to damage the seal rings.

Install the primary drive gear (page 13-52).

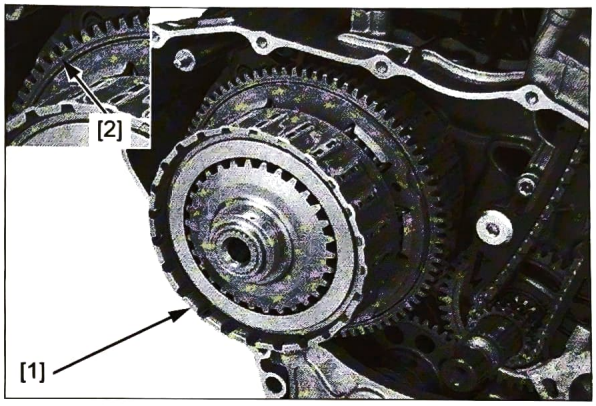

PRIMARY DRIVE GEAR

REMOVAL

Remove the right crankcase cover (page 13-38).

Install the special tool between the primary drive and driven gears.

TOOL:

Gear holder, 2.5 [1]	**07724-0010100 or 07724-001A100 (U.S.A. only)**

Loosen the primary drive gear nut [2].

NOTE:

- The primary drive gear nut has left-handed thread.

Remove the primary drive gear nut, washer [3], and primary drive gear [4] from the crankshaft.

Check the primary drive gear for scratches, damage, abnormal wear and deformation. Replace if necessary.

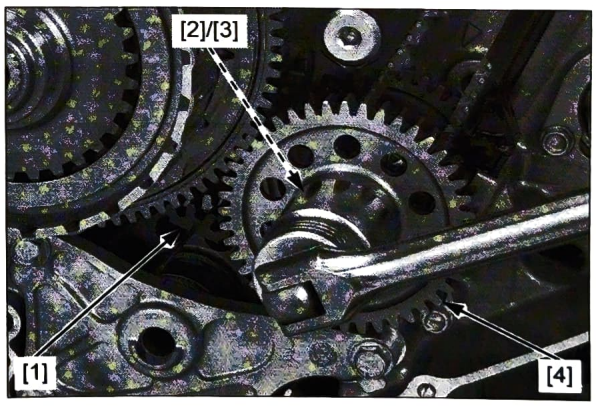

INSTALLATION

Apply molybdenum oil solution to the primary drive gear sliding surface.

Install the primary drive gear [1] to the crankshaft.

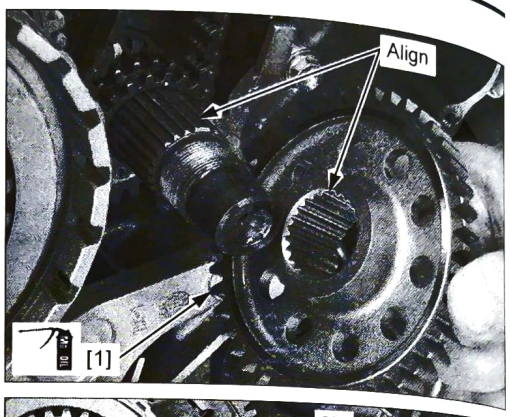

NOTE:

- Align primary drive gear wide tooth with the crankshaft wide tooth.

Apply engine oil to the primary drive gear nut threads and seating surface.
Install the washer [1] and primary drive gear nut [2].

Install the below special tool between the primary drive and driven gears.

TOOL:

Gear holder, 2.5 [3]	**07724-0010100 or 07724-001A100 (U.S.A. only)**

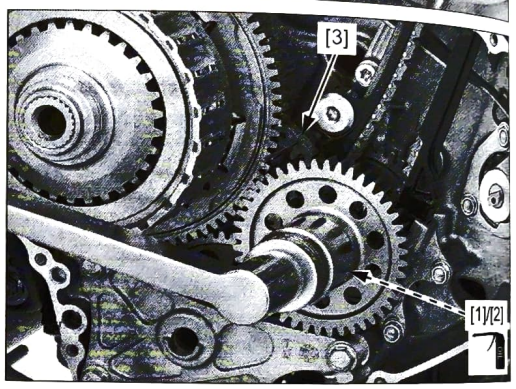

Tighten the primary drive gear nut to the specified torque.

TORQUE: 118 N·m (12.0 kgf·m, 87 lbf·ft)

NOTE:

- The primary drive gear nut has left-handed thread.

Install the right crankcase cover (page 13-41).

SHIFT CONTROL MOTOR/REDUCTION GEARS

REMOVAL

Remove the shift control motor cover bolts [1] and shift control motor cover [2].

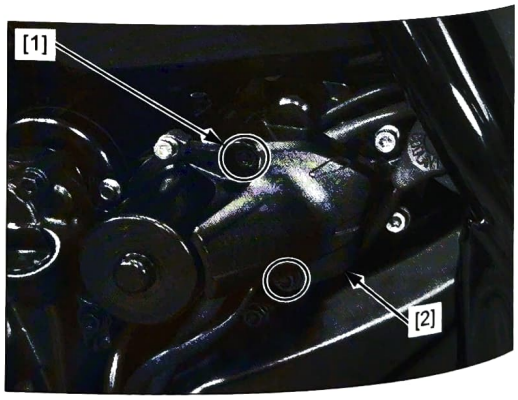

Disconnect the shift control motor 2P (Black) connector [1].

Remove the following:

- Shift control motor mounting torx bolts [2]
- Shift control motor [3]
- O-ring [4]

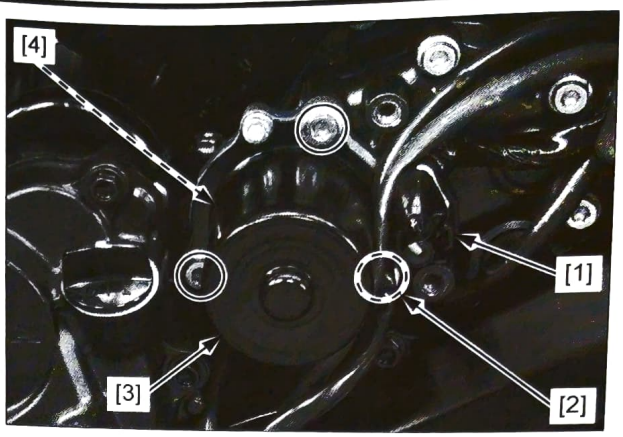

Remove the reduction gear cover torx bolts [1] and reduction gear cover [2].

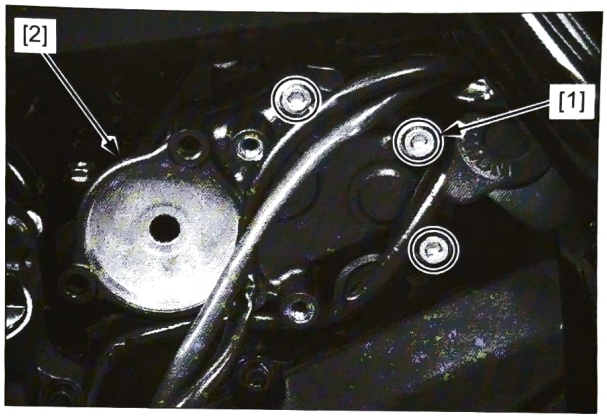

Remove the following:

- Dowel pins [1]
- Gasket [2]
- Reduction gears [3]

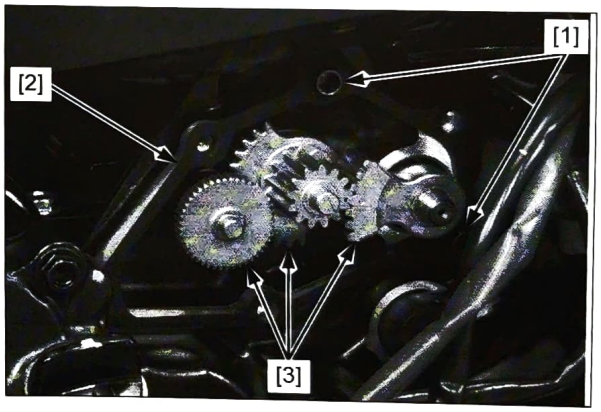

BEARING REPLACEMENT

Heat the reduction gear cover to 80°C (176°F) evenly using a heat gun.

NOTE:

- Do not use a torch to heat the reduction gear cover; it may cause warping.

Tap the reduction gear cover lightly and remove the bearings.

- Radial ball bearing (699ZZ) [1]
- Radial ball bearing (607ZZ) [2]
- Radial ball bearing (696ZZ) [3]

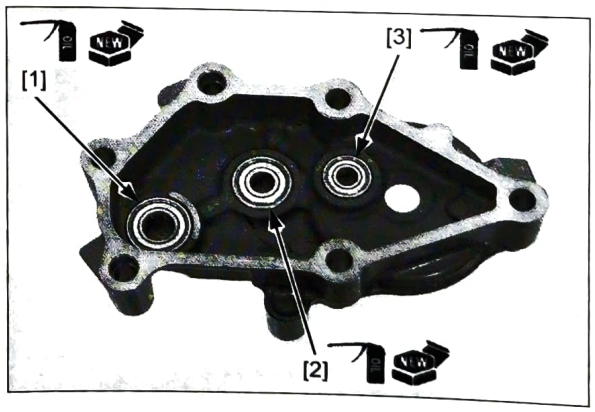

Apply engine oil to new bearings.

Drive in new bearings squarely until they are fully seated.

NOTE:

- Drive in new bearings with the marking side facing up.

For crankcase side bearings replacement (page 14-23)

INSTALLATION

Apply 2 – 4 g (0.07 – 0.14 oz) of specified grease to the reduction gear bearing journals [1].

SPECIFIED GREASE:
UNIREX N3 manufactured by ExxonMobil or equivalent

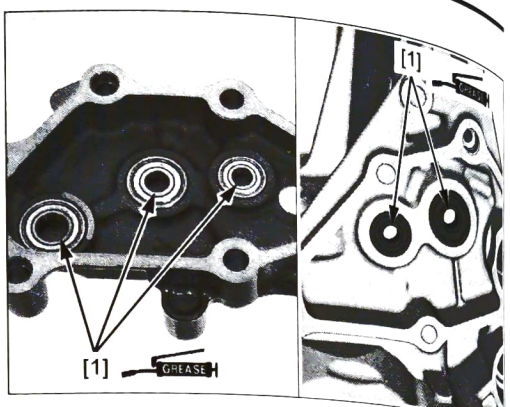

Apply 2 – 4 g (0.07 – 0.14 oz) of specified grease to the reduction gear teeth.

SPECIFIED GREASE:
UNIREX N3 manufactured by ExxonMobil or equivalent

Install the reduction gear B [1].

NOTE:
- Align the reduction gear B ends with the ribs of the crankcase.

Install the reduction gear C [2].

NOTE:
- Align each clinched tooth of the reduction gear C and gearshift spindle.
- Make sure that the punch mark of the reduction gear C is positioned between the reduction gear B tooth.

Install reduction gear A [3].

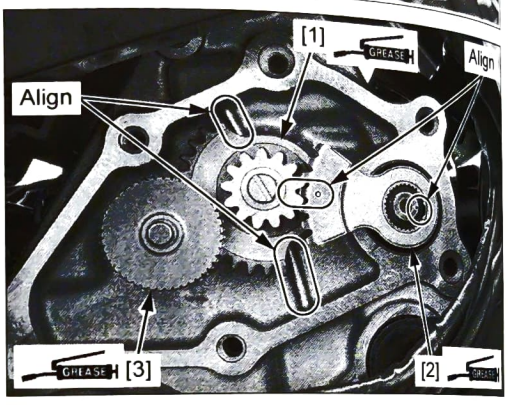

Install the dowel pins [1] and gasket [2].

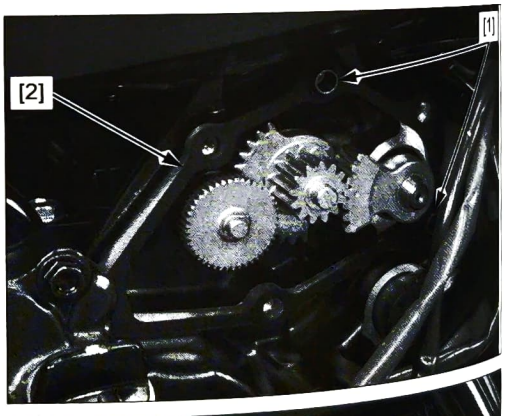

Install the reduction gear cover [1] and reduction gear cover torx bolts [2].

Tighten the reduction gear cover torx bolts to the specified torque.

TORQUE: 14 N·m (1.4 kgf·m, 10 lbf·ft)

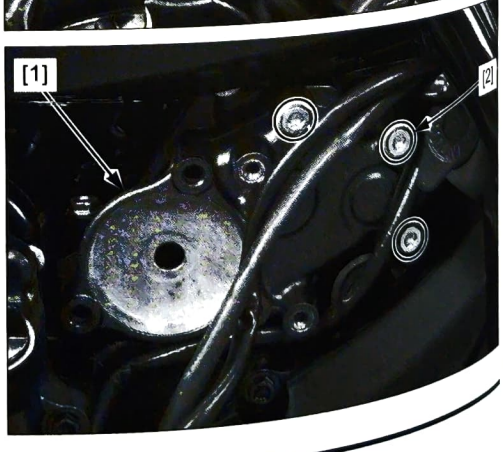

Coat a new O-ring with engine oil.

Install the O-ring [1] into the groove in the shift control motor [2].

Install the shift control motor.

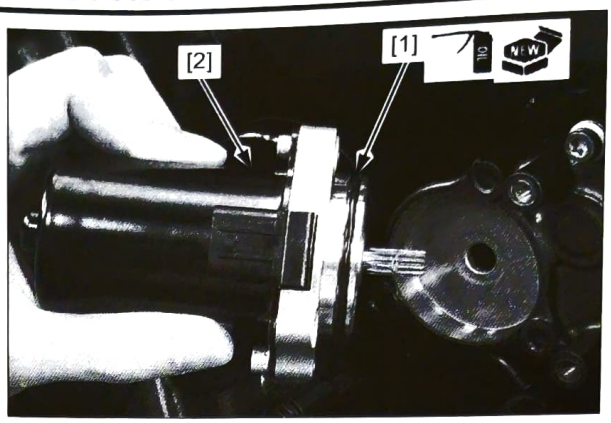

Install the shift control motor mounting torx bolts [1].

Tighten the shift control motor mounting torx bolts to the specified torque.

TORQUE: 14 N·m (1.4 kgf·m, 10 lbf·ft)

Connect the shift control motor 2P (Black) connector [2].

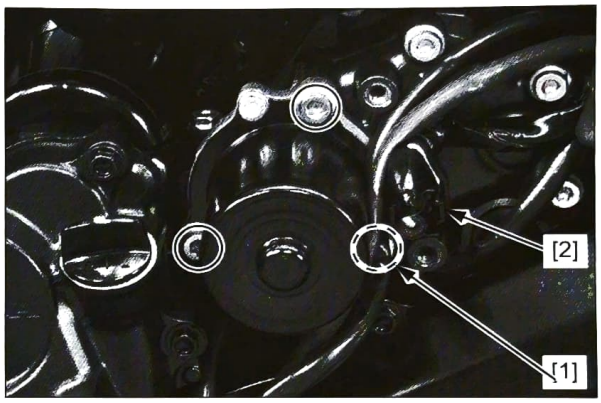

Install the shift control motor cover [1] and shift control motor cover bolts [2].

Tighten the shift control motor cover bolts to the specified torque.

TORQUE: 12 N·m (1.2 kgf·m, 9 lbf·ft)

NOTE:

- Route the wire properly (page 1-27).

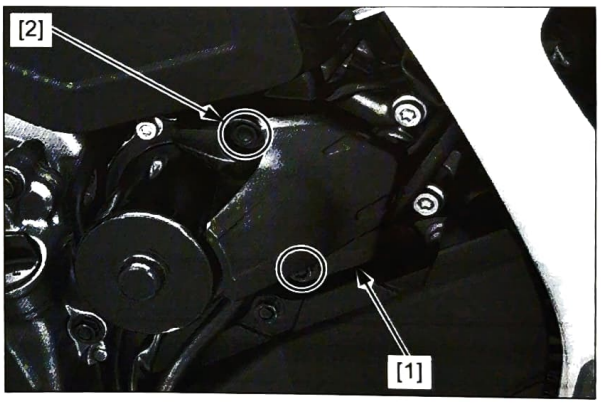

GEARSHIFT LINKAGE

REMOVAL

Remove the following:

- Shift control motor/reduction gears (page 13-52)
- Dual clutch (page 13-48)

Remove the following:

- Gearshift spindle [1]
- Washer [2]
- Drum shifter collar [3]

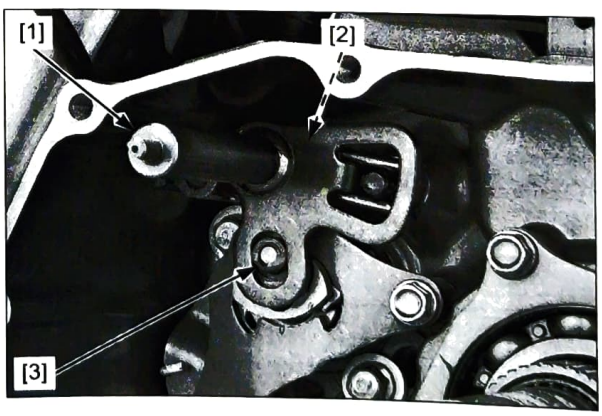

Remove the drum shifter guide plate/drum shifter assembly mounting bolts [1].

Remove the drum shifter guide plate/drum shifter assembly [2].

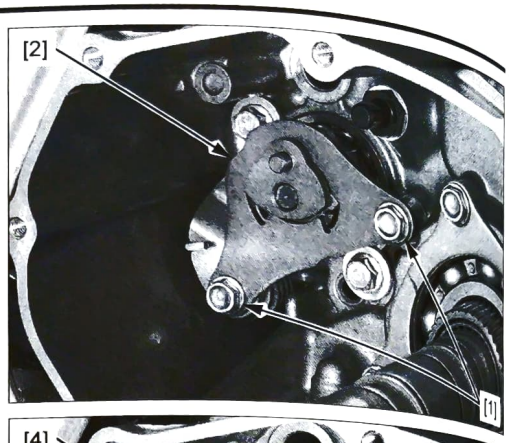

Remove the following:

- Guide plate distance collar [1]
- Dowel pin [2] (if necessary)
- Stopper arm side collar [3]
- Shift drum center bolt [4]

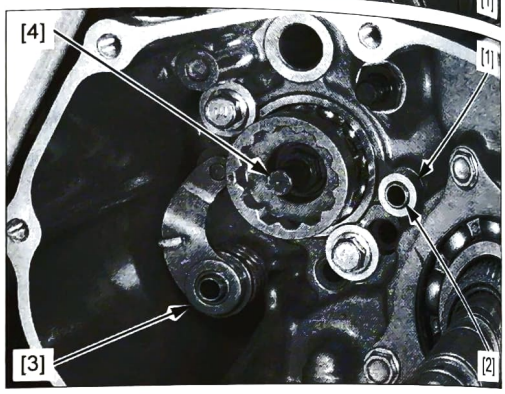

Remove the shift drum center [1] while holding the shift drum stopper arm [2] using a screwdriver as shown.

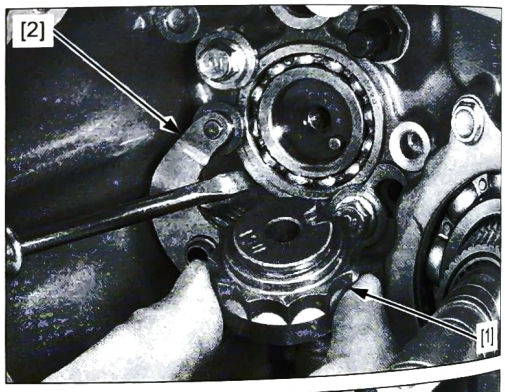

Remove the following:

- Shift drum stopper arm [1]
- Stopper arm collar [2]
- Stopper arm return spring [3]
- Shift drum center dowel pin [4]
- Dowel pin [5] (if necessary)

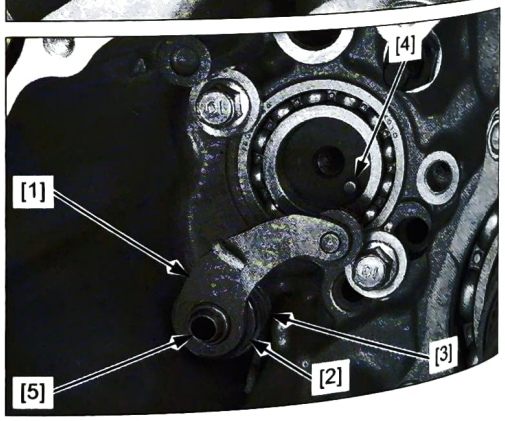

Remove the oil seal [1].

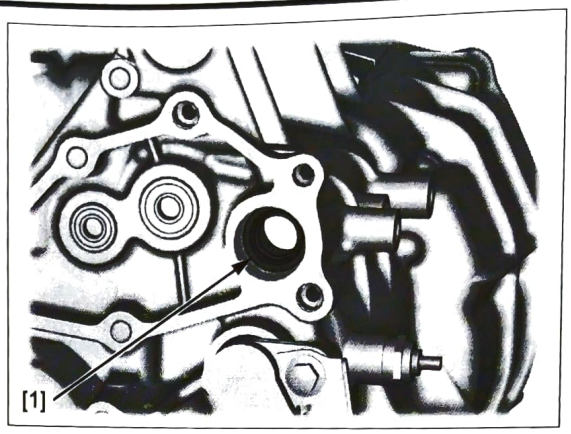

INSPECTION

Inspect the following parts for scratches, damage, abnormal wear, or deformation.

- Gearshift spindle, spindle arm, return spring
- Drum shifter guide plate
- Drum shifter
- Ratchet pawls
- Plungers
- Plunger springs

Replace if necessary.

INSTALLATION

Install the oil seal [1] until it is in position as shown.

Apply grease to the oil seal lips.

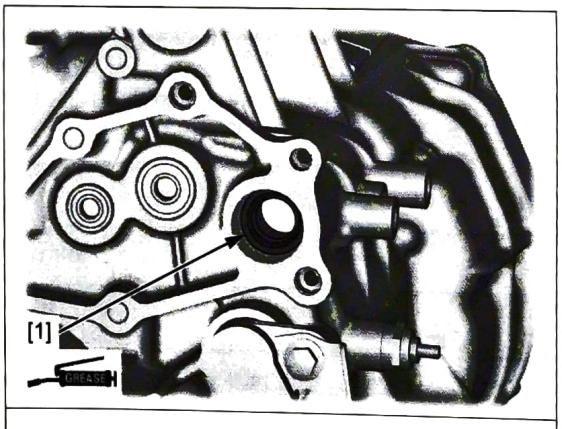

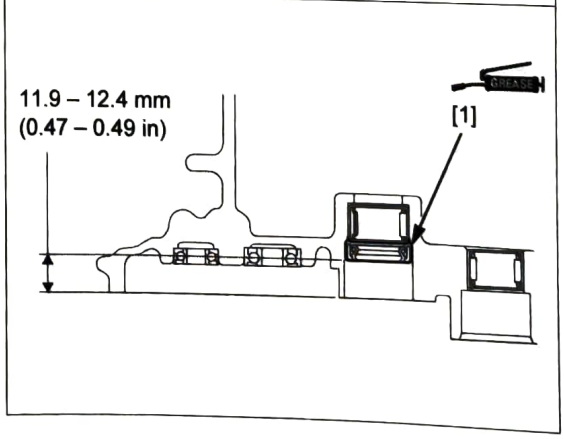

Install the following:

- Shift drum center dowel pin [1]
- Dowel pin [2] (if you removed)
- Shift drum stopper arm [3]
- Stopper arm collar [4]
- Stopper arm return spring [5]

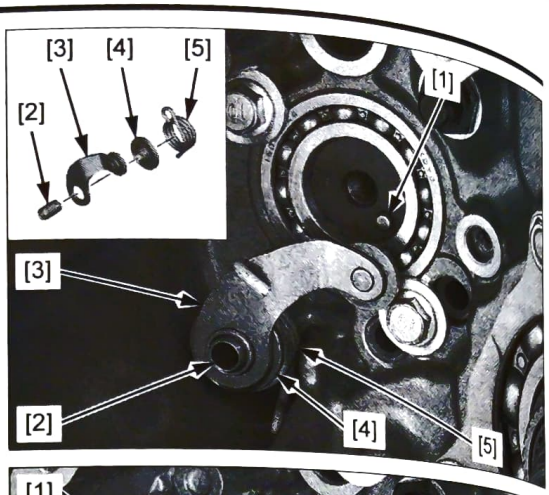

Hold the shift drum stopper arm [1] with a screwdriver.

Install the shift drum center [2].

NOTE:

- Aligning the shift drum center groove with the dowel pin.

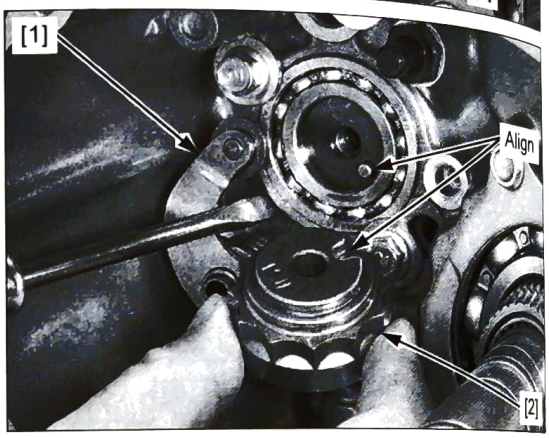

Apply locking agent to the shift drum center bolt threads (page 1-11).

Install and tighten the shift drum center bolt [1] to the specified torque.

TORQUE: 31 N·m (3.2 kgf·m, 23 lbf·ft)

Install the following:

- Dowel pin [2] (if you removed)
- Guide plate distance collar [3]
- Stopper arm side collar [4]

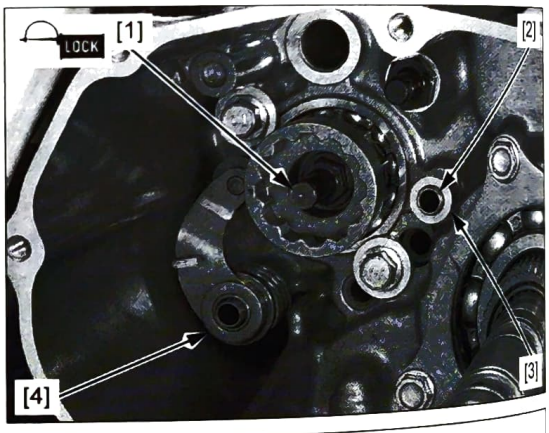

Install the following in the drum shifter [1]:

- Plunger springs [2]
- Plungers [3]
- Ratchet pawls [4]

Set the drum shifter assembly in the drum shifter guide plate [5].

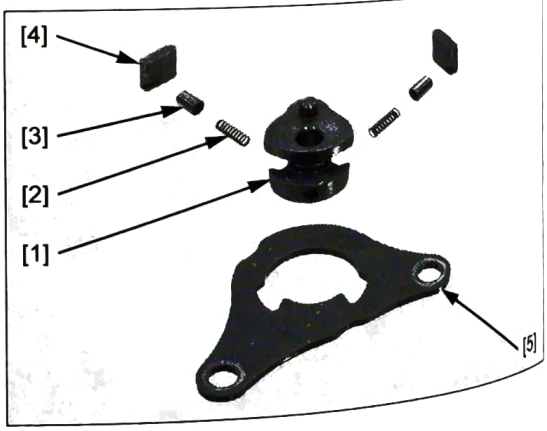

Install the drum shifter guide plate/drum shifter assembly [1].

Apply locking agent to the threads of the drum shifter guide plate/drum shifter assembly mounting bolts [2] (page 1-11).

Install and tighten the drum shifter guide plate/drum shifter assembly mounting bolts.

TORQUE: 12 N·m (1.2 kgf·m, 9 lbf·ft)

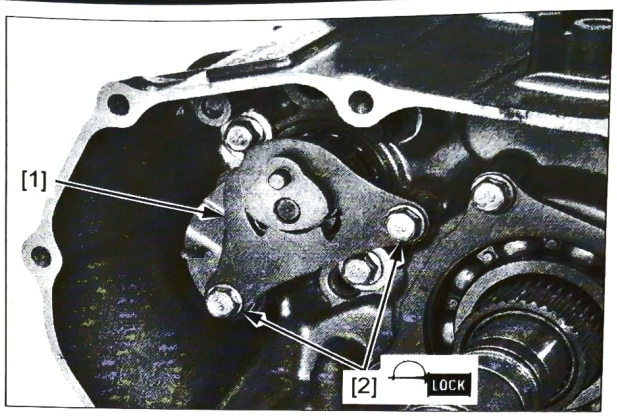

Install the drum shifter collar [1] onto the drum shifter.

Install the thrust washer [2] onto the gearshift spindle [3].

Install the gearshift spindle into the crankcase.

NOTE:

- Align the gearshift spindle return spring ends with the spring pin.
- Align the gearshift spindle arm hole with the drum shifter collar.

Install the following:

- Dual clutch (page 13-51)
- Reduction gears/shift control motor (page 13-54)

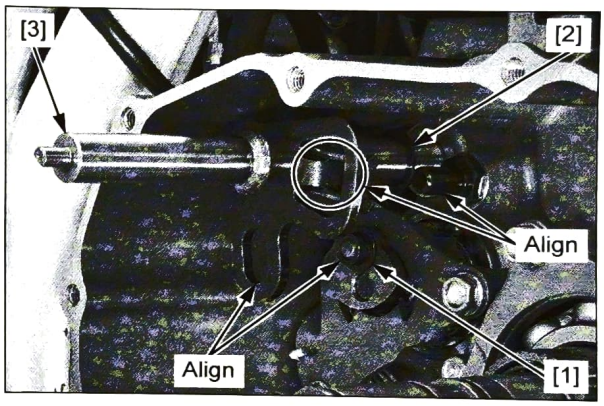

MAINSHAFT SENSOR

REMOVAL/INSTALLATION

INNER MAINSHAFT SENSOR

Remove the radiator reserve tank (page 8-5).

Disconnect the inner mainshaft sensor 3P (Black) connector [1].

Remove the following:

- Bolts [2]
- Inner mainshaft sensor [3]
- O-ring [4]

Installation is in the reverse order of removal.

NOTE:

- Replace the O-ring with a new one.
- Apply engine oil to a new O-ring.

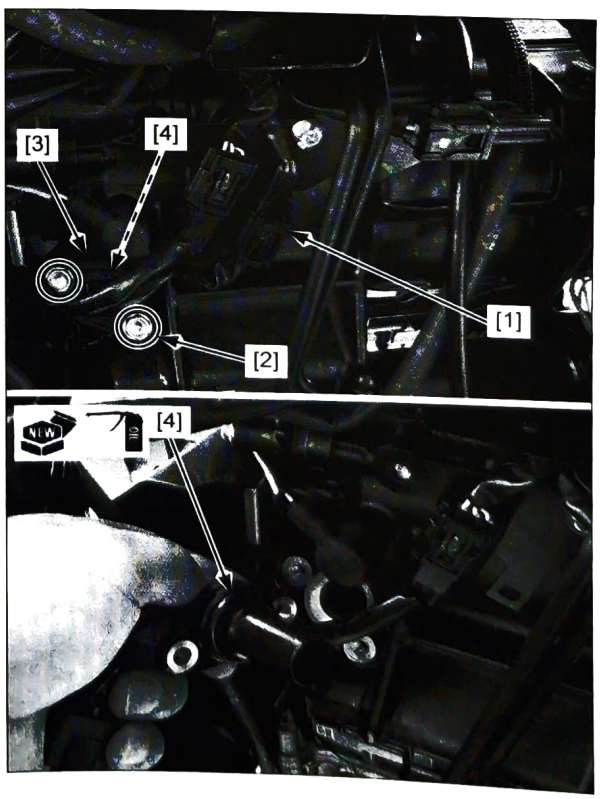

OUTER MAINSHAFT SENSOR

Remove the ABS modulator assembly (page 20-25).

Disconnect the outer mainshaft sensor 3P (Black) connector [1].

Remove the following:

- Bolt [2]
- Outer mainshaft sensor [3]
- O-ring [4]

Installation is in the reverse order of removal.

NOTE:

- Replace the O-ring with a new one.
- Apply engine oil to a new O-ring.

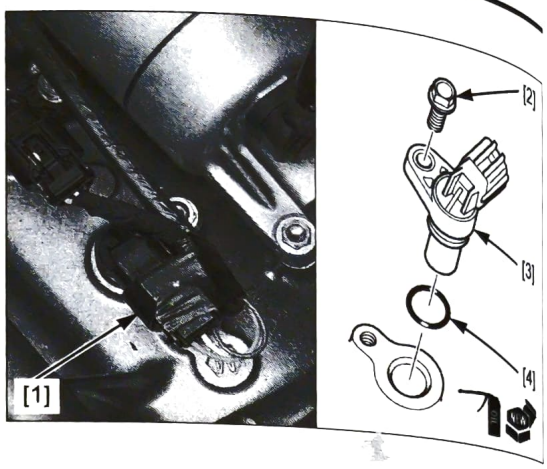

TR SENSOR

REMOVAL/INSTALLATION

Remove the radiator reserve tank (page 8-10).
Remove the drive sprocket cover (page 2-9).

Disconnect the TR sensor 3P (Black) connector [1].

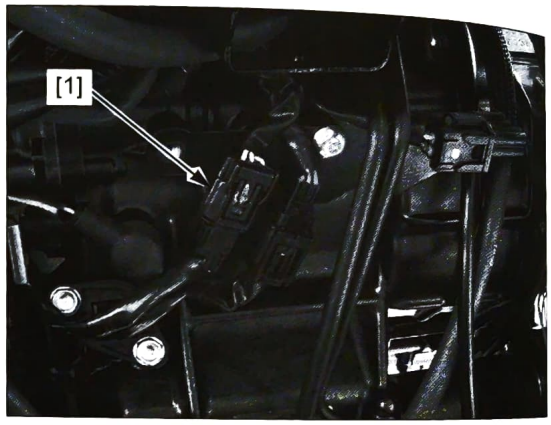

Remove the following:

- Bolt [1]
- Sensor cover [2]
- TR sensor [3]
- O-ring [4]

Installation is in the reverse order of removal.

TORQUE:

TR sensor mounting bolt:
12 N·m (1.2 kgf·m, 9 lbf·ft)

NOTE:

- Always replace the O-ring with a new one.
- Apply engine oil to a new O-ring.
- Align the flat surfaces of the TR sensor and shift drum end.
- Route the wires properly (page 1-27).

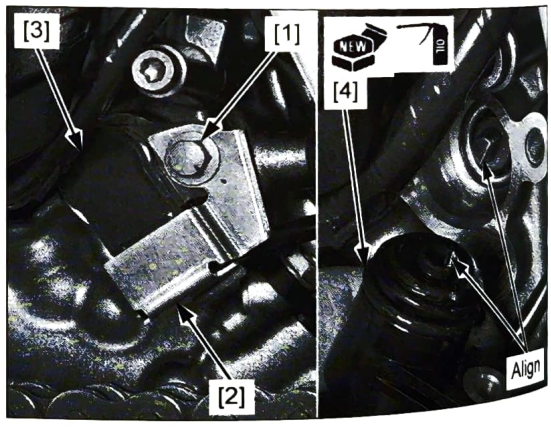

SHIFT SPINDLE ANGLE SENSOR

REMOVAL/INSTALLATION

Remove the battery case (page 2-12).
Remove the clutch EOP sensor cover (page 2-10).

Release the shift spindle angle sensor 3P (Black) connector [1] from stay.

Disconnect the shift spindle angle sensor 3P (Black) connector.

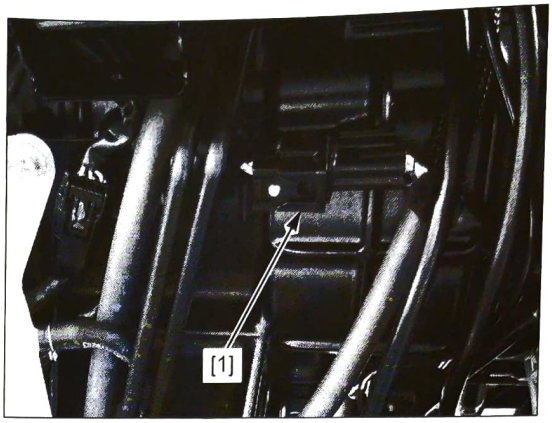

Remove the following:

- Shift spindle angle sensor bolt [1]
- Shift spindle angle sensor [2]
- O-ring [3]

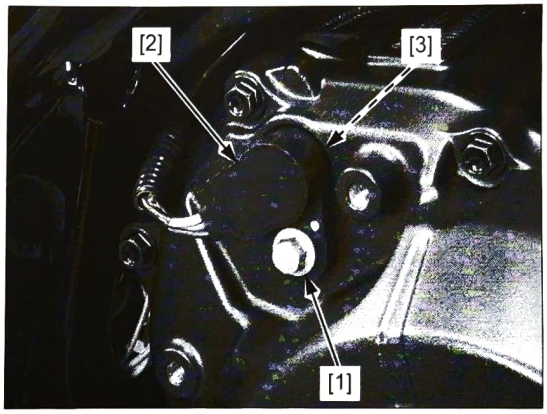

Installation is in the reverse order of removal.

TORQUE:
Shift spindle angle sensor bolt:
12 N·m (1.2 kgf·m, 9 lbf·ft)

NOTE:
- Always replace the O-ring [1] with a new one.
- Apply engine oil to a new O-ring.
- Align the flat surfaces of the shift spindle angle sensor and gearshift spindle end.
- Route the hoses and wires properly (page 1-27).

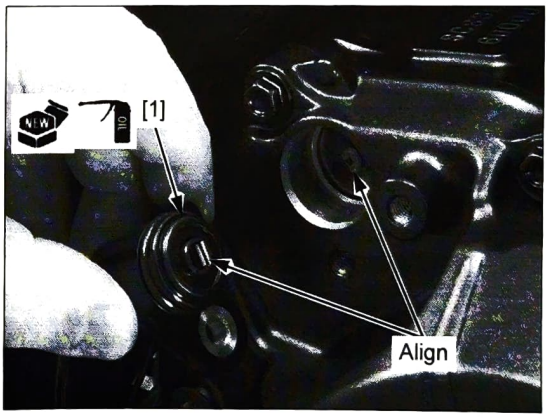

CLUTCH EOP SENSOR

REMOVAL/INSTALLATION

Drain the engine oil (page 3-12).

Remove the clutch EOP sensor cover (page 2-10).

Disconnect the following:

- Clutch line EOP sensor 3P (Gray) connector [1]
- No.1 clutch EOP sensor 3P (Gray) connector [2]
- No.2 clutch EOP sensor 3P (Black) connector [3]

Remove the following:

- Clutch line EOP sensor [4]
- No.1 clutch EOP sensor [5]
- No.2 clutch EOP sensor [6]

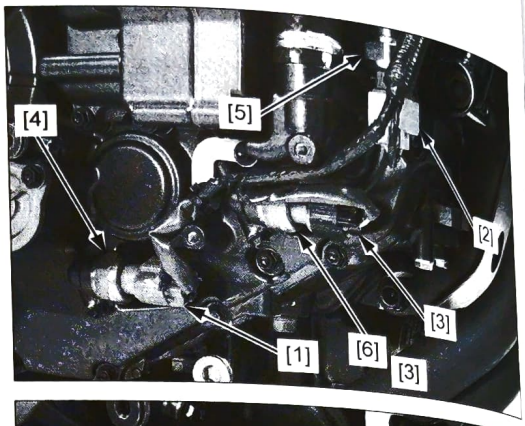

NOTE:

- These three clutch EOP sensors are the same parts.

Installation is in the reverse order of removal.

TORQUE:
No.1/No.2 clutch EOP sensor:
20 N·m (2.0 kgf·m, 15 lbf·ft)
Clutch line EOP sensor:
20 N·m (2.0 kgf·m, 15 lbf·ft)



NOTE:

- Replace the O-ring [1] with a new one.
- Coat a new O-ring with engine oil.
- Route the wire properly (page 1-27).

EOT SENSOR

REMOVAL/INSTALLATION

Drain the engine oil (page 3-12).

Disconnect the EOT sensor 2P (Black) connector [1].

Remove the EOT sensor [2] and sealing washer [3].

Installation is in the reverse order of removal.

TORQUE:
EOT sensor:
15 N·m (1.5 kgf·m, 11 lbf·ft)

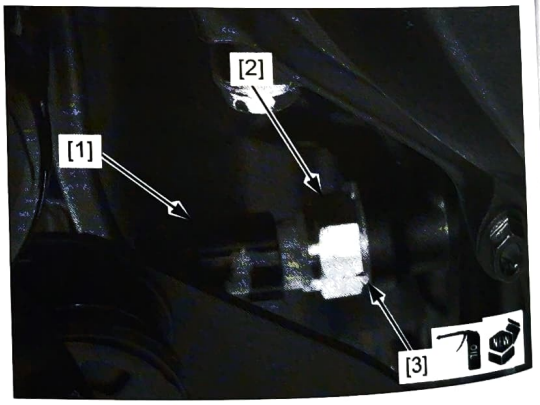

NOTE:

- Apply engine oil to the EOT sensor threads and seating surface.
- Replace the sealing washer with a new one.

Fill the engine oil with the recommended engine oil (page 1-27).

EOP SENSOR

REMOVAL/INSTALLATION

Place the motorcycle on its sidestand on a level surface.

Drain the engine oil (page 3-12).

Remove the left engine cover (page 2-11).

Disconnect the EOP sensor 3P (Black) connector [1].

Remove the EOP sensor [2] and O-ring [3].

Installation is in the reverse order of removal.

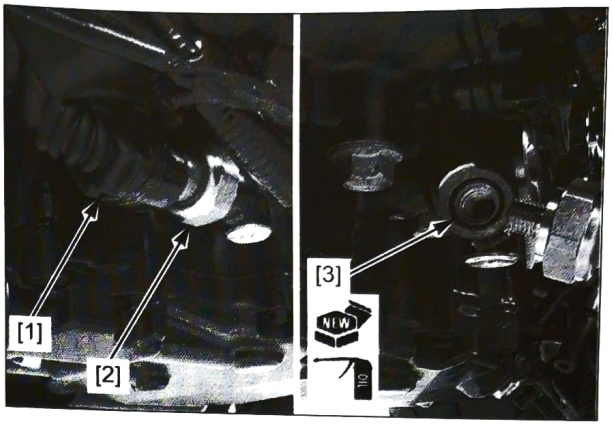

NOTE:

- Replace the O-ring with a new one.
- Apply engine oil to the O-ring.
- Route the wire properly.

TORQUE:

EOP sensor:

22 N·m (2.2 kgf·m, 16 lbf·ft)

Fill the engine oil with the recommended engine oil (page 3-12).

NEUTRAL SWITCH

REMOVAL/INSTALLATION

Remove the radiator reserve tank (page 8-10).

Release the rubber cap [1].

Remove the following:

- Nut [2]
- Neutral switch terminal [3]
- Neutral switch [4]
- Sealing washer [5]

Installation is in the reverse order of removal.

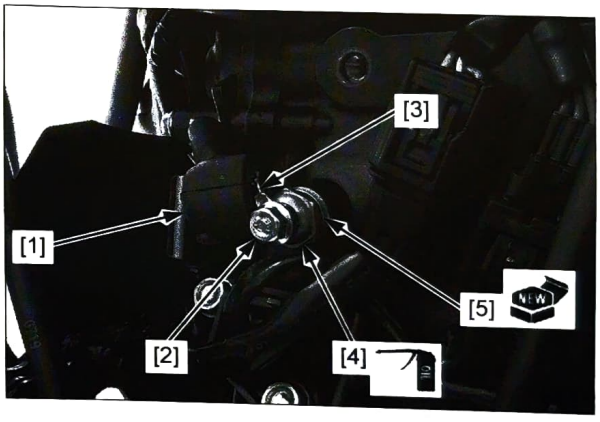

TORQUE:

Neutral switch:

12 N·m (1.2 kgf·m, 9 lbf·ft)

Neutral switch terminal nut:

1.7 N·m (0.2 kgf·m, 1.3 lbf·ft)

NOTE:

- Apply engine oil to the neutral switch threads and seating surface.
- Replace the sealing washer with a new one.

TCM

REMOVAL/INSTALLATION

Remove the battery (page 21-5).

Disconnect the TCM 33P (Black) connector [1] and TCM 33P (Gray) connector [2].

Unhook the rubber band [3].

Remove the TCM [4].

Installation is in the reverse order of removal.

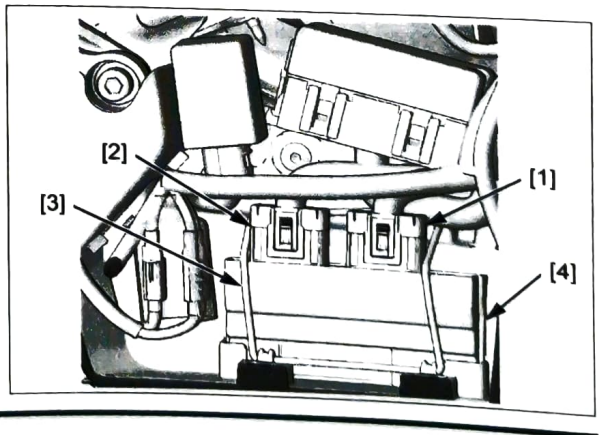

NOTE:

- If the TCM is replaced, perform the clutch initialize learning procedure (page 13-65).

POWER/GROUND LINE INSPECTION

POWER INPUT LINE

Disconnect the TCM 33P (Black) connector (page 13-63).

Turn the ignition switch ON.

Measure the voltage between the 33P (Black) connector [1] and ground.

TOOL:
Test probe, 2 packs **07ZAJ-RDJA110**

CONNECTION: A7 (+) – Ground (–)

There should be battery voltage.

If there is no voltage, check the following:

- Open circuit in the Brown wire between the TCM and FI relay
- Faulty FI relay or its circuits

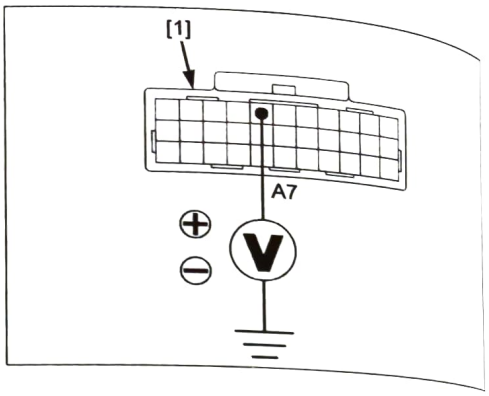

POWER GROUND LINE

Disconnect the TCM 33P (Black) connector (page 13-63).

Check for continuity between the wire harness side 33P (Black) connector [1] and ground.

TOOL:
Test probe, 2 packs **07ZAJ-RDJA110**

CONNECTION: A23 – Ground
A24 – Ground

There should be continuity at all times.

If there is no continuity, check for an open circuit in the Green wires.

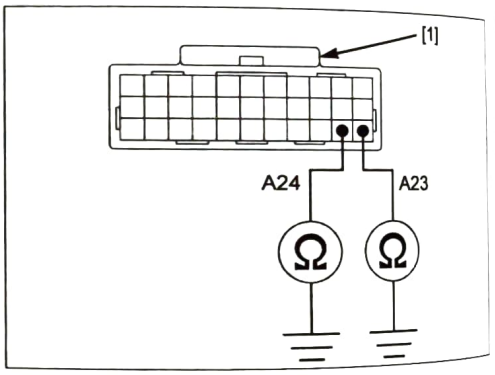

LOGIC GROUND LINE

Disconnect the TCM 33P (Black) connector (page 13-63).

Check for continuity between the wire harness side 33P (Black) connector [1] and ground.

TOOL:
Test probe, 2 packs **07ZAJ-RDJA110**

CONNECTION: A11 – Ground

There should be continuity at all times.

If there is no continuity, check for an open circuit in the Green/blue wire.

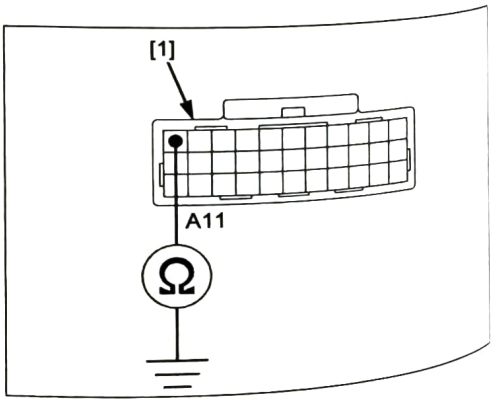

DCT RELAY

REMOVAL/INSTALLATION

Remove the battery (page 21-5).

Release the cover [1] and the DCT relay [2].

Installation is in the reverse order of removal.

– For relay inspection (page 4-64)

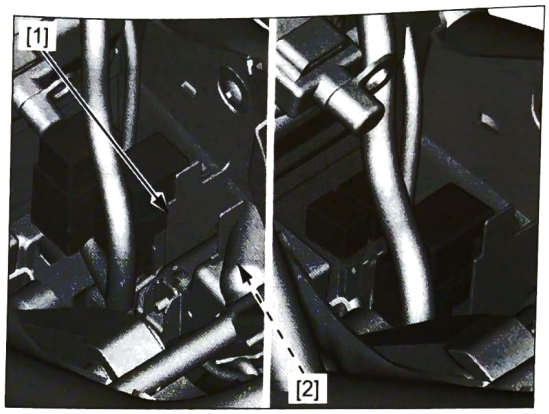

CLUTCH INITIALIZE LEARNING (TCM)

NOTE:

- If the TCM and/or clutch assembly are replaced, perform this procedure.
- Before starting this procedure, check the following:
  – PGM-FI system and DCT system have no DTC.
  – Engine idle speed is normal.
  – Transmission is in neutral and cooling fan stops.
- Do not operate the throttle during Clutch Initialize Learning.

1. Warm up the engine to the normal operating temperature (engine oil temperature: 50 – 110°C/ 122 – 230°F) then stop it.

NOTE:

- If the TCM is replaced with a new one, the shift indicator [1] and S mode level indicator [2] will display in the figure as shown when the ignition switch is turned ON.
  In this status, the Clutch Initialization Learning is necessary.
- When the shift indicator displays as shown, the engine must be warmed before proceeding:
  – Large "L": extremely low oil temperature indicator
  – Small "L": low oil temperature indicator

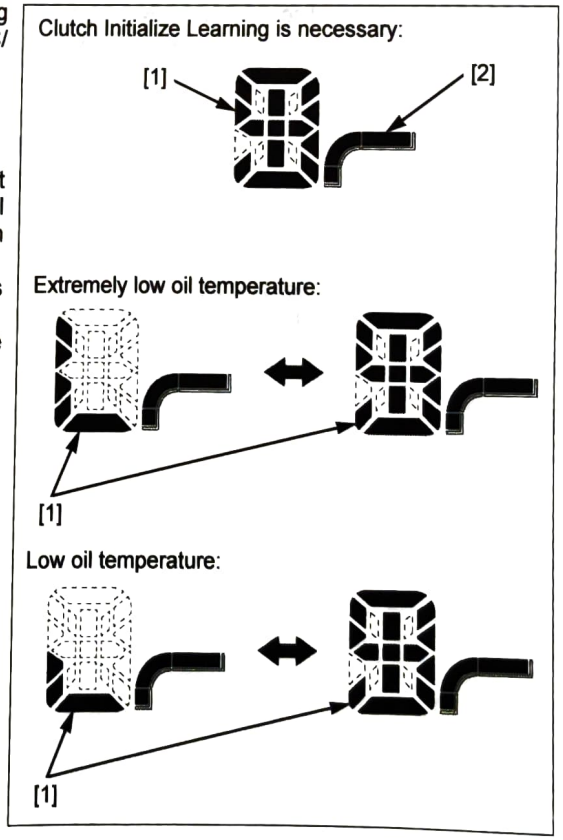

2. Turn the ignition switch ON while pushing the D-S side of the N-D switch [1].

   The MIL [2] will come on.

   Release the N-D switch after the MIL goes off.

   Each indicator displays as shown.





When only the dual clutch assembly is replaced (when in the neutral gear):



When the TCM is replaced:



3. Push the N-D switch [1] in the sequence as follows:

- Push the D-S side of the N-D switch
- Push the D-S side of the N-D switch
- Push the N side of the N-D switch
- Push the D-S side of the N-D switch
- Push the N side of the N-D switch

The TCM is ready to Clutch Initialize Learning when the shift indicator [2] and S mode level indicator [3] light as shown.

NOTE:

- When the shift indicator displays as follows, the engine is not warmed up enough.
  - Large "L": extremely low oil temperature
  - Small "L": low oil temperature

  If so, warm up the engine until the "L" on the shift indicator goes off.
  Stop the engine and perform steps 2 and 3 again.



Ready to Clutch Initialize Learning:

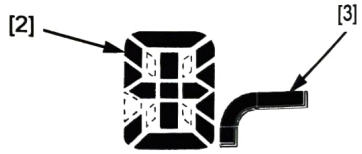

Extremely low oil temperature:

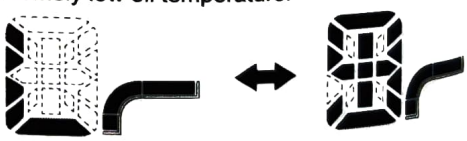

Low oil temperature:

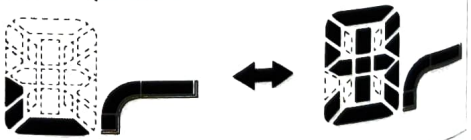

4. Start the engine and let it idle.

   The shift indicator and S mode level indicator light during Clutch Initialize Learning.

   Then each indicator displays as follows:

- The Clutch Initialize Learning is successful:
  – Shift indicator displays "N".
  – S mode level indicator goes off.
- The Clutch Initialize Learning is unsuccessful:
  – The shift indicator and S mode level indicator stay on.

NOTE:

- If the Clutch Initialize Learning is unsuccessful, perform the initialize learning procedure from step 2 again.

5. Stop the engine.

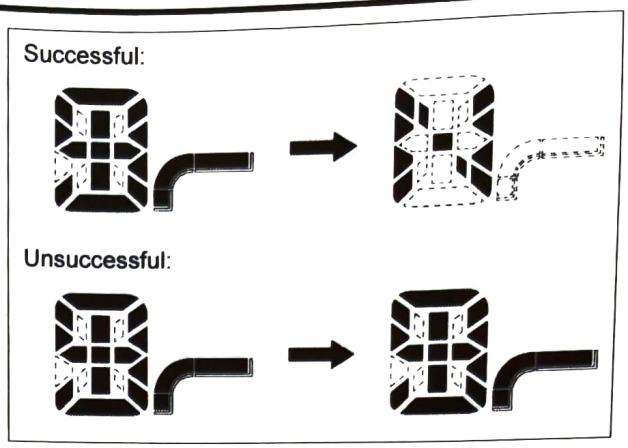

MEMO

14. CRANKCASE/TRANSMISSION/BALANCER

SERVICE INFORMATION 14-2

TROUBLESHOOTING 14-4

COMPONENT LOCATION 14-5

BALANCER 14-7

CRANKCASE SEPARATION 14-12

TRANSMISSION 14-14

CRANKCASE ASSEMBLY 14-27

SERVICE INFORMATION

GENERAL

- Be careful not to damage the crankcase mating surfaces when servicing.
- Clean the oil passages before assembling the crankcase halves.
- Prior to assembling the crankcase halves, apply sealant to their mating surfaces. Wipe off excess sealant thoroughly.

MT type

- The crankcase must be separated to service the following:
  - Transmission
  - Crankshaft (page 15-4)
  - Piston/cylinder (page 15-12)
- The following components must be removed before separating the crankcase:
  - Engine (page 16-4)
  - Clutch (page 12-9)
  - Gearshift linkage (page 12-20)
  - Primary drive gear (page 12-18)
  - Balancer (page 14-7)
  - Flywheel (page 11-6)
  - Oil pump (page 9-6)
  - Starter motor (page 6-7)
  - VS sensor (page 4-60)
  - GP sensor (page 4-61)
  - Neutral switch (page 22-24)

DCT type

- The crankcase must be separated to service the following:
  - Transmission
  - Crankshaft (page 15-4)
  - Piston/cylinder (page 15-12)
- The following components must be removed before separating the crankcase:
  - Engine (page 16-4)
  - Dual clutch (page 13-48)
  - Gearshift linkage (page 13-55)
  - Balancer (page 14-7)
  - Flywheel (page 11-6)
  - Cylinder head (page 10-17)
  - Oil pump (page 9-6)
  - Starter motor (page 6-7)
  - Shift control motor/reduction gears (page 13-52)
  - Mainshaft sensors (page 13-59)
  - ECT sensor (page 4-57)
  - VS sensor (page 4-60)
  - Neutral switch (page 13-63)

TOOLS

Gear holder, 2.5
07724-0010100

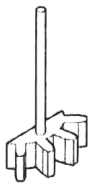

or 07724-001A100 (U.S.A. only)

Bearing remover shaft set, 25 mm
07936-ZV10100

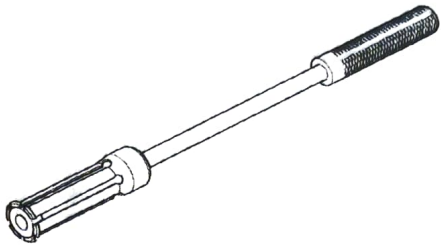

or 07936-ZV1A100 (U.S.A. only)

Remover weight
07741-0010201

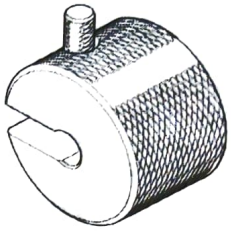

or 07936-371020A (U.S.A. only)
or commercially available 3/8" x 16 slide hammer (U.S.A. only)

Driver, 15 x 280L
07949-3710001

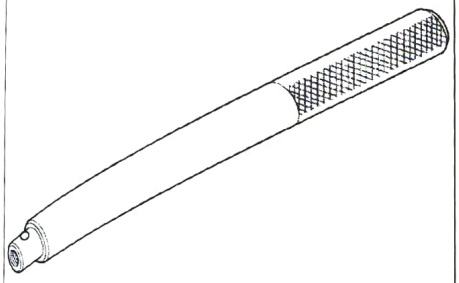

Attachment, 52 x 55 mm
07746-0010400

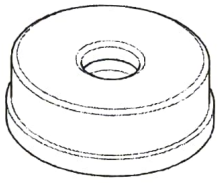

Pilot, 25 mm
07746-0040600

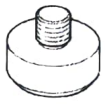

Pilot, 12 mm
07746-0040200



Seal driver, 14 x 22 mm
07PPD-YE10100

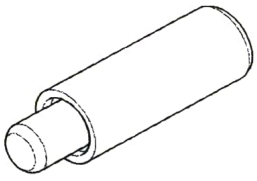

TROUBLESHOOTING

Hard to shift

- Improper clutch operation
- Incorrect engine oil weight
- Bent shift fork
- Bent shift fork shaft
- Bent shift fork claw
- Damaged shift drum groove
- Bent gearshift spindle
  - MT type (page 12-20)
  - DCT type (page 13-55)

Transmission jumps out of gear

- Worn gear dogs
- Worn gear shifter groove
- Bent shift fork shaft
- Worn or bent shift forks
- Broken shift drum stopper arm
  - MT type (page 12-20)
  - DCT type (page 13-55)
- Broken shift drum stopper arm return spring
  - MT type (page 12-20)
  - DCT type (page 13-55)
- Broken gearshift spindle return spring
  - MT type (page 12-20)
  - DCT type (page 13-55)

Excessive engine noise

- Worn or damaged transmission gear
- Worn or damaged transmission bearings
- Worn or damaged balancer

COMPONENT LOCATION

MT type:

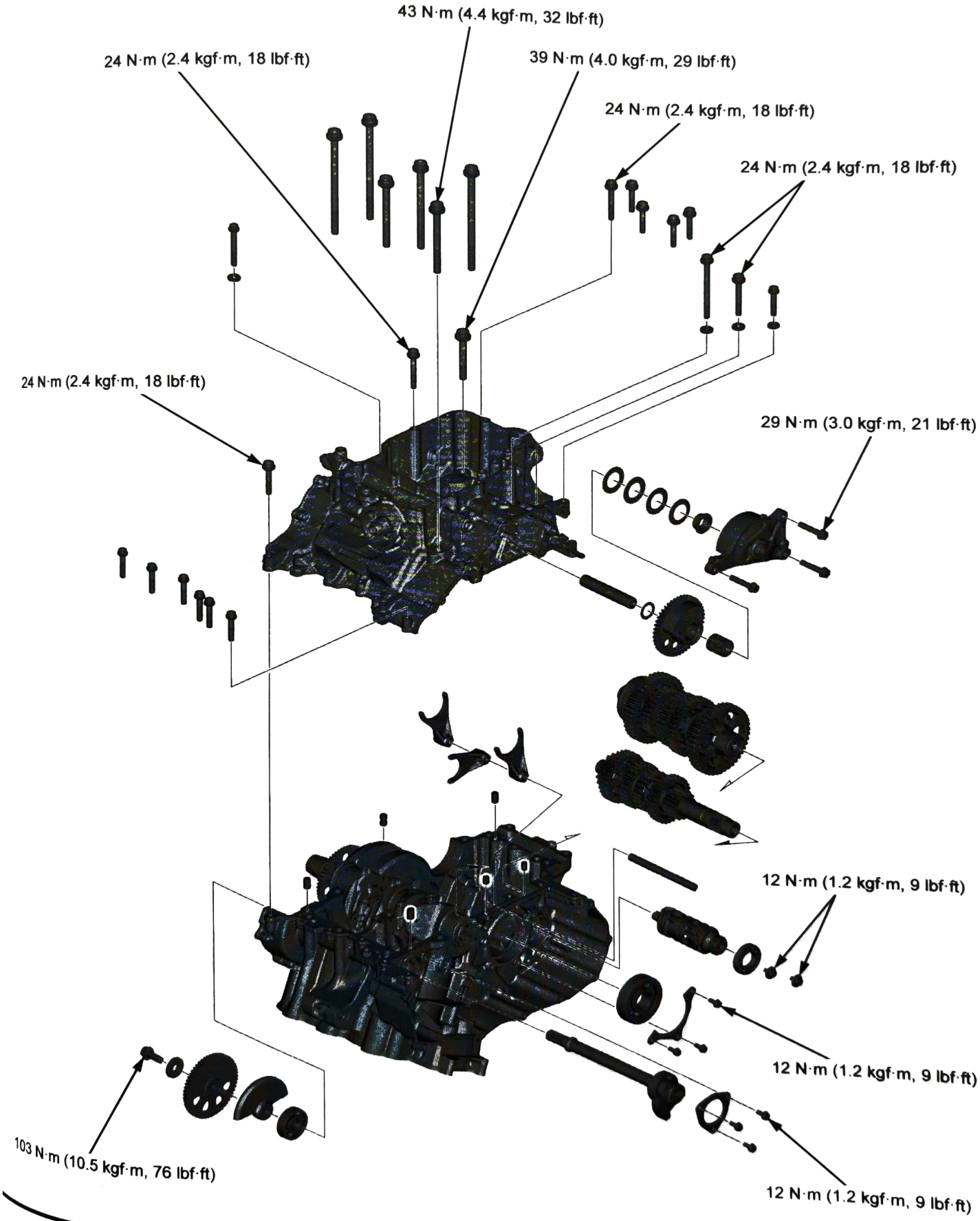

DCT type:

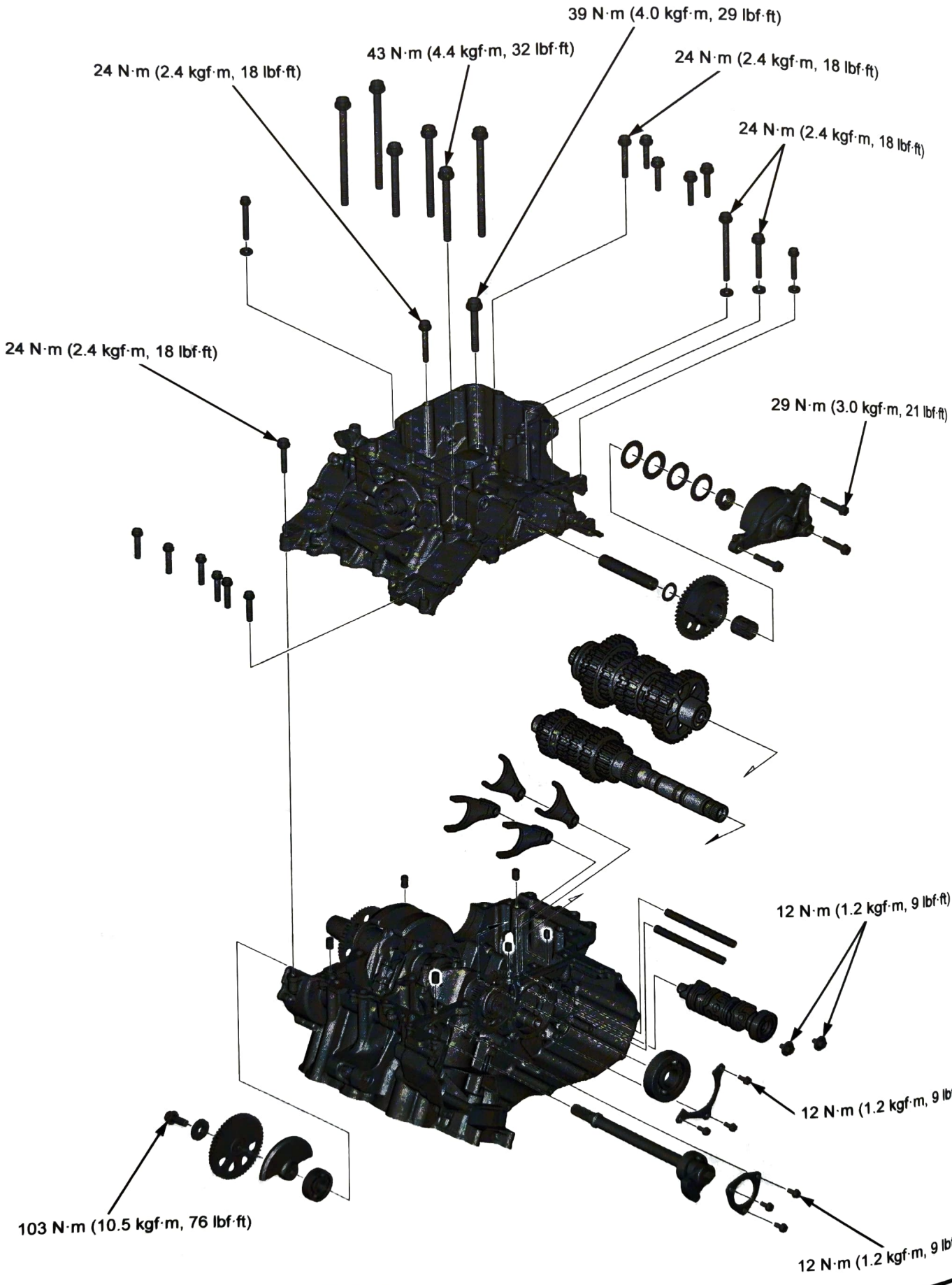
39 N·m (4.0 kgf·m, 29 lbf·ft)
43 N·m (4.4 kgf·m, 32 lbf·ft)
24 N·m (2.4 kgf·m, 18 lbf·ft)
24 N·m (2.4 kgf·m, 18 lbf·ft)
24 N·m (2.4 kgf·m, 18 lbf·ft)
24 N·m (2.4 kgf·m, 18 lbf·ft)
29 N·m (3.0 kgf·m, 21 lbf·ft)
12 N·m (1.2 kgf·m, 9 lbf·ft)
12 N·m (1.2 kgf·m, 9 lbf·ft)
103 N·m (10.5 kgf·m, 76 lbf·ft)
12 N·m (1.2 kgf·m, 9 lbf·ft)

FRONT BALANCER

REMOVAL

Remove the flywheel (page 11-6).

Remove the right crankcase cover:

- MT type (page 12-5)
- DCT type (page 13-38)

Install the special tool between the front balancer drive and driven gears.

TOOL:
Gear holder, 2.5 [1] **07724-0010100 or 07724-001A100 (U.S.A. only)**

Remove the front balancer shaft bolt [2], washer [3], and front balancer driven gear [4].

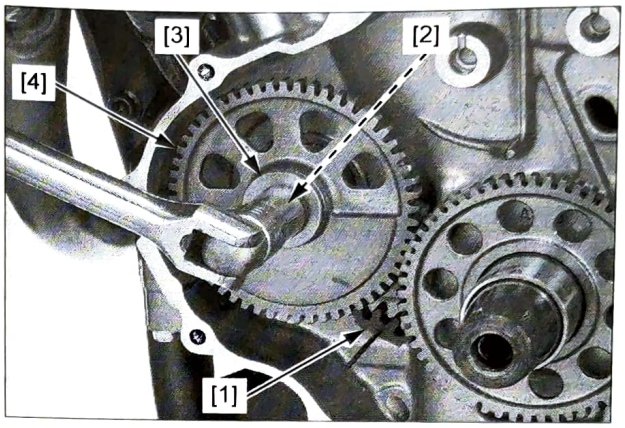

Remove the left front balancer weight [1].

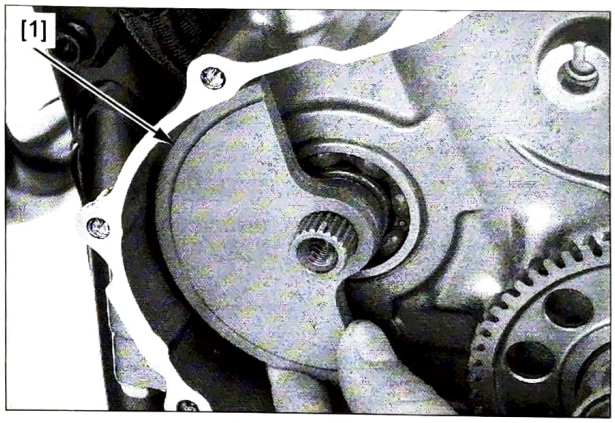

Remove the front balancer bearing set plate bolts [1] and set plate [2].

Remove the front balancer shaft [3].

Check for damage of the front balancer shaft, and replace it if necessary.

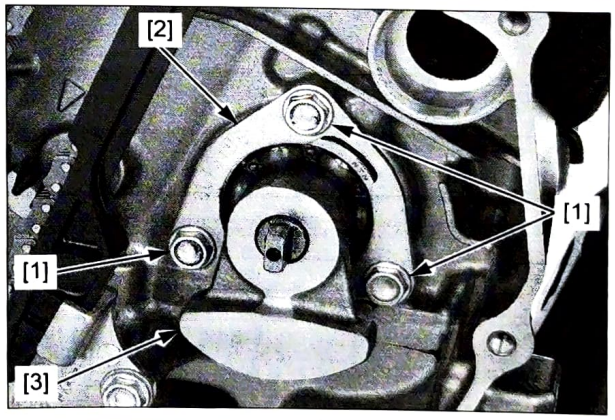

Remove the left front balancer bearing [1].

Check that the left front balancer bearing turns smoothly and quietly, and replace it if necessary.

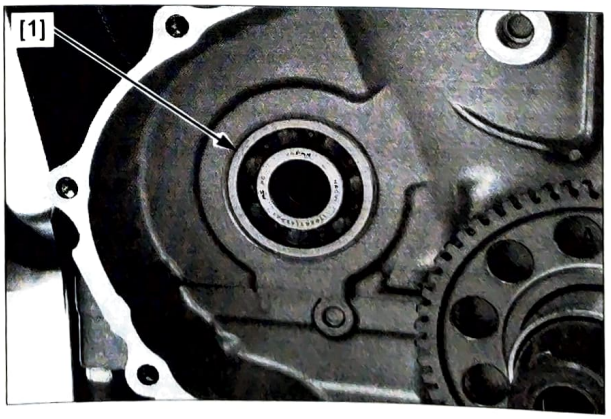

INSTALLATION

Apply engine oil to the left front balancer bearing rolling area and contact surface.

Install the left front balancer bearing [1].

NOTE:

- Install the left front balancer bearing with the marked side facing out.

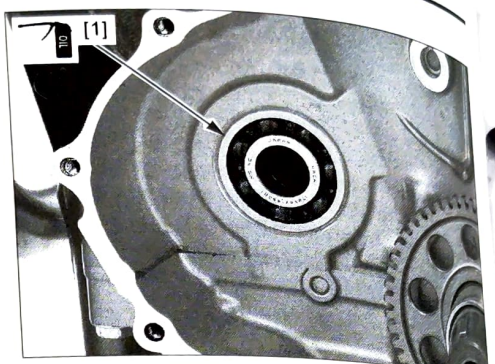

Install the front balancer shaft [1].

Apply locking agent to the front balancer bearing set plate bolts threads (page 1-21).

Install the set plate [2] and front balancer bearing set plate bolts [3].

NOTE:

- Install the set plate with its "OUTSIDE" mark [4] facing out.

Tighten the front balancer bearing set plate bolts to the specified torque.

TORQUE: 12 N·m (1.2 kgf·m, 9 lbf·ft)

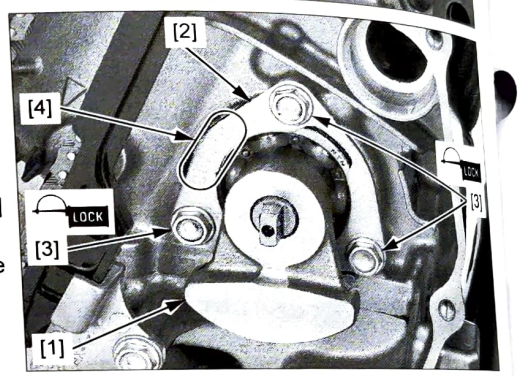

Install the left front balancer weight [1].

NOTE:

- Align the left front balancer weight wide tooth with the front balancer shaft clinched tooth.

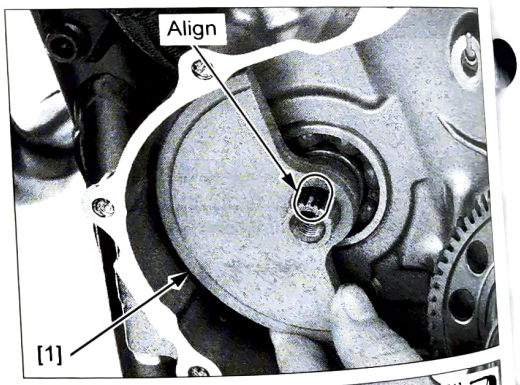

Apply engine oil to the front balancer driven gear teeth.

Install the front balancer driven gear [1].

NOTE:

- Align the front balancer driven gear wide tooth with the front balancer shaft clinched tooth.
- Make sure that the drive gear index line [2] is positioned between the front balancer driven gear index lines [3].

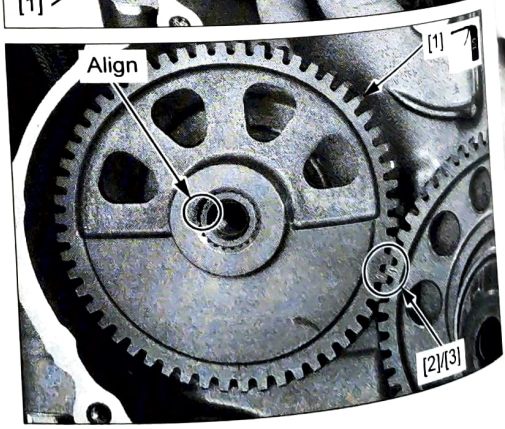

Install the special tool below between the front balancer drive gear and driven gear.

TOOL:
Gear holder, 2.5 [1] **07724-0010100 or 07724-001A100 (U.S.A. only)**

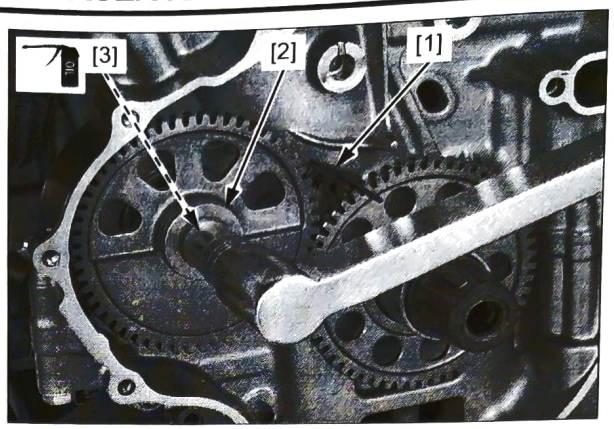

Apply engine oil to the front balancer shaft bolt threads and seating surface.

Install the washer [2] and front balancer shaft bolt [3].

Tighten the front balancer shaft bolt to the specified torque.

TORQUE: 103 N·m (10.5 kgf·m, 76 lbf·ft)

Install the right crankcase cover:

- MT type (page 12-7)
- DCT type (page 13-41)

Install the flywheel (page 11-8).

REAR BALANCER

REMOVAL

Remove the right crankcase cover:

- MT type (page 12-5)
- DCT type (page 13-38)

Remove the rear balancer shaft holder bolts [1] and rear balancer shaft holder [2].

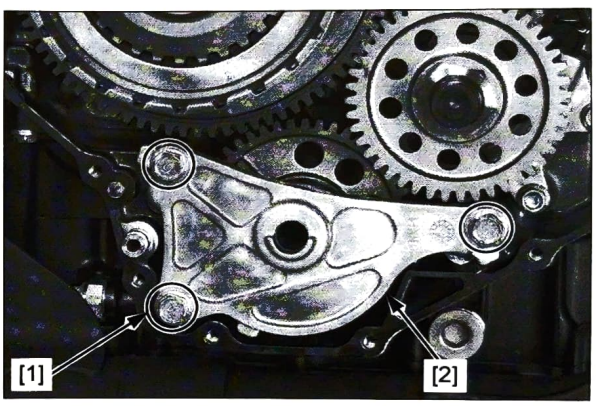

Remove the following:

- Collar [1]
- Thrust spring [2]
- Washers [3]
- Thrust bearing [4]

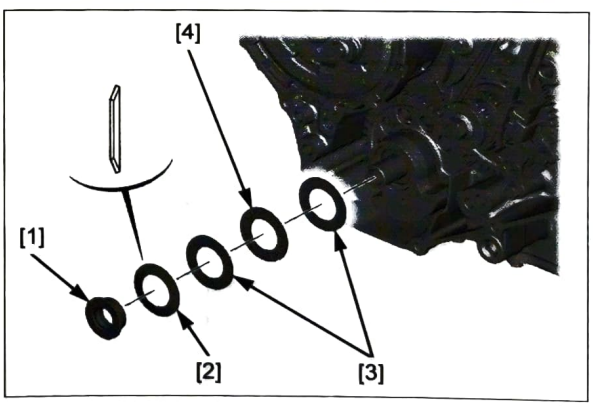

Remove the following:

- Rear balancer driven gear [1]
- Needle bearing [2]

Check the needle bearing for wear or damage, smooth operation, and replace if necessary.

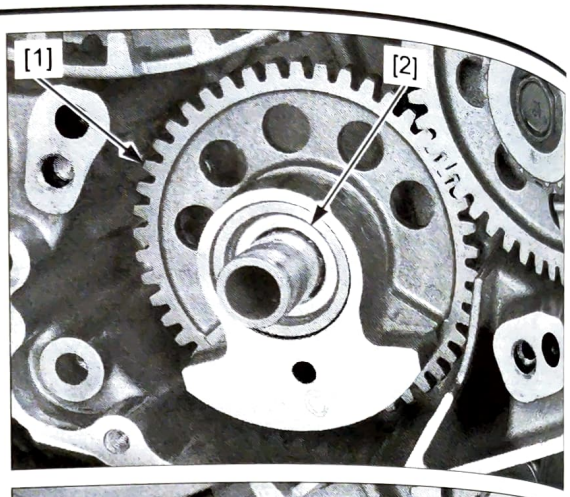

Remove the rear balancer gear shaft [1] and rear balancer washer [2].

Check for damage of the rear balancer gear shaft, and replace if necessary.

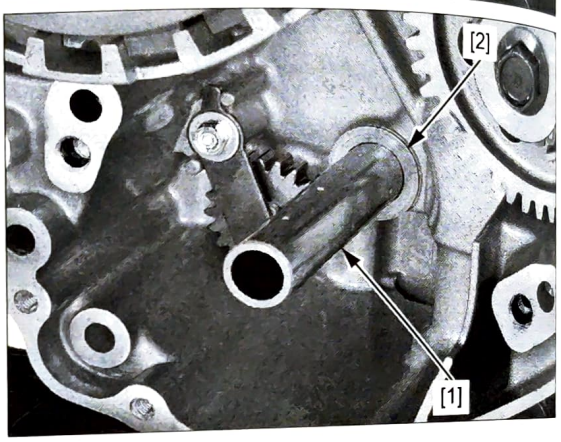

INSTALLATION

Apply molybdenum oil solution to the rear balancer washer seating surface.

Install the rear balancer gear shaft [1] and rear balancer washer [2].

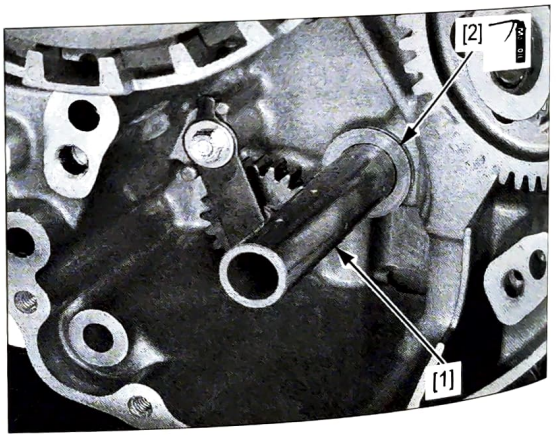

If you are replacing the rear balancer driven gear and/or needle bearing, record the balancer driven gear I.D. code [1] off of the balancer weight.

If you are reusing the rear balancer driven gear, measure the balancer driven gear journal I.D.

Determine the replacement needle bearing parts No. with reference to the balancer driven gear I.D. code or the measured balancer driven gear journal I.D.

Refer to the rear balancer needle bearing selection table below for bearing selection.

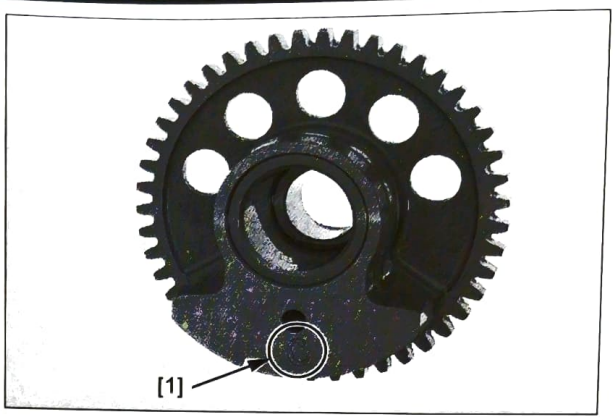

NEEDLE BEARING O.D.:

91015-MJP-G51 (Blue mark): Thickest
91016-MJP-G51 (White mark): ↕
91017-MJP-G51 (Green mark): Thinnest

REAR BALANCER NEEDLE BEARING SELECTION TABLE:

	REAR BALANCER DRIVEN GEAR I.D. CODE		
	a	b	c
	27.000 – 27.005 mm (1.0630 – 1.0632 in)	26.996 – 27.000 mm (1.0628 – 1.0630 in)	26.992 – 26.996 mm (1.0627 – 1.0628 in)
NEEDLE BEARING PARTS NO.	91015-MJP-G51	91016-MJP-G51	91017-MJP-G51

Coat the needle bearing and rear balancer driven gear teeth with engine oil.

Install the following:

- Needle bearing [1]
- Rear balancer driven gear [2]

NOTE:

- Align the oil pump drive gear [3] tooth of rear balancer driven gear with the oil pump driven gear [4] tooth.
- Make sure that the drive gear index line [5] is positioned between the rear balancer driven gear index lines [6].

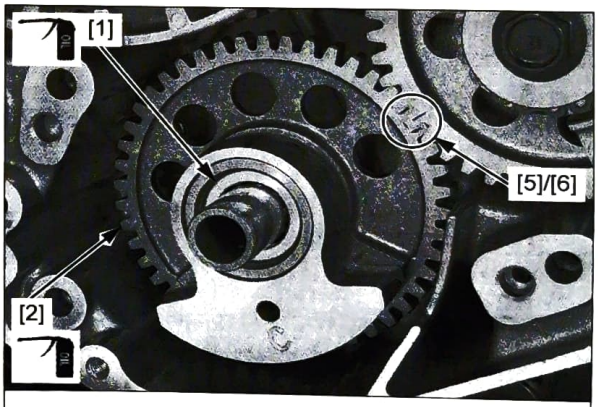

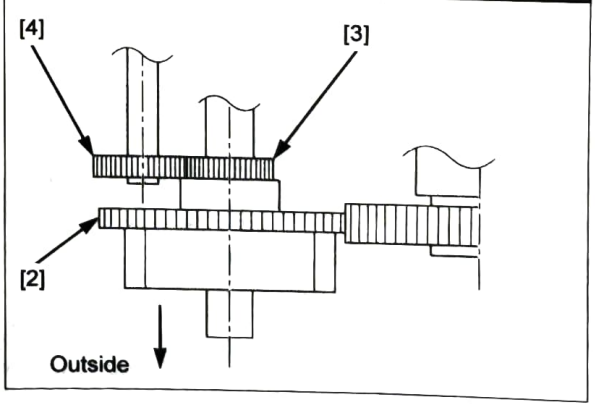

Coat the thrust bearing with engine oil.

Apply molybdenum oil solution to the thrust spring sliding surface.

Install the following:

- Washers [1]
- Thrust bearing [2]
- Thrust spring [3]
- Collar [4]

NOTE:

- Install the thrust spring as shown.

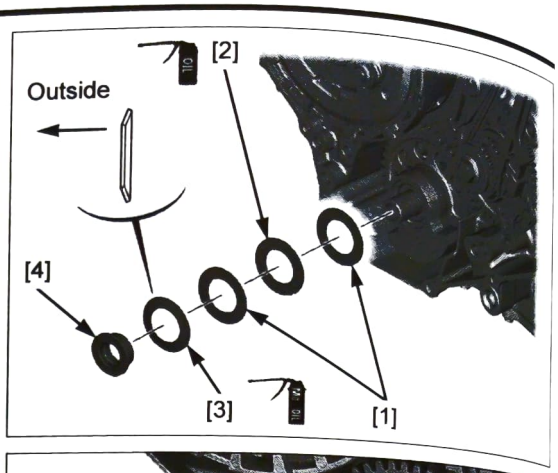

Install the rear balancer shaft holder [1].

NOTE:

- Align the dowel pins of the rear balancer shaft holder with the crankcase holes.

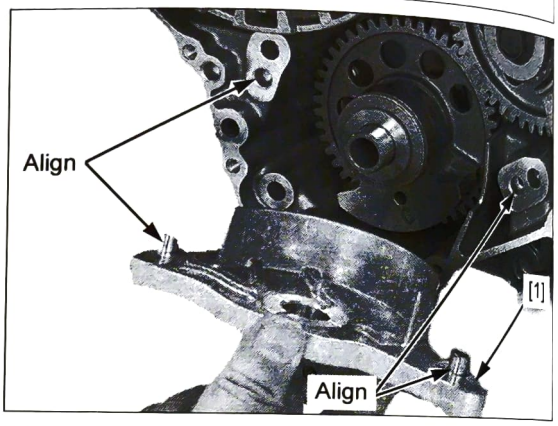

Install and tighten the rear balancer shaft holder bolts [1] to the specified torque.

TORQUE: 29 N·m (3.0 kgf·m, 21 lbf·ft)

Install the right crankcase cover:

- MT type (page 12-7)
- DCT type (page 13-41)

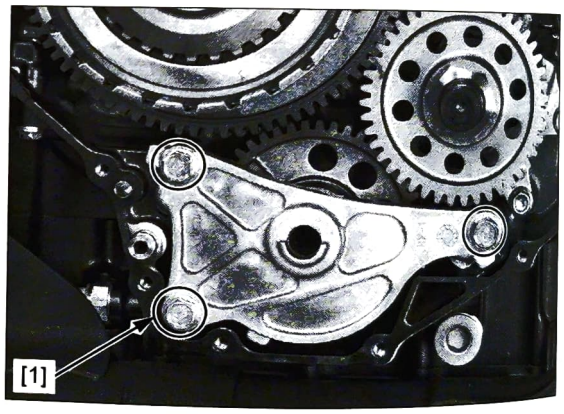

CRANKCASE SEPARATION

Remove the engine (page 16-4).

Remove the bolts [1], water hose flange [2], and O-ring [3].

Remove the necessary parts for separating the crankcase by referring to the Service Information in the beginning of this section (page 14-2).

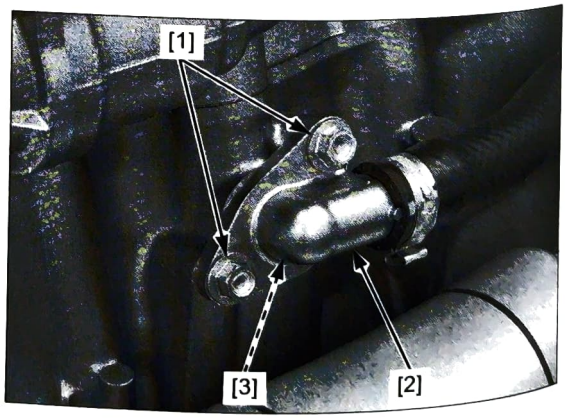

DCT type: Remove the following:

- Cam chain guide plate bolts [1]
- Cam chain guide plate [2]
- Cam chain [3]
- Timing sprocket [4]

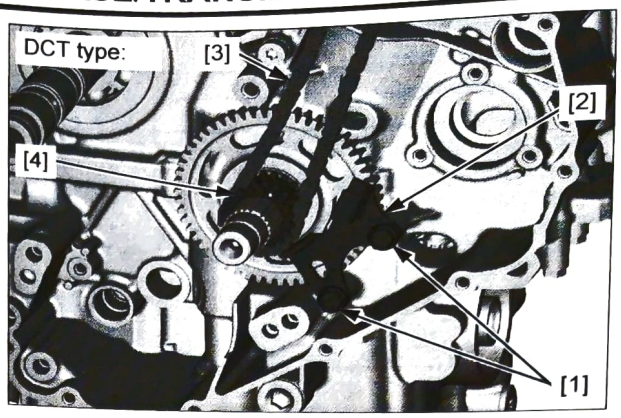

Place the engine upside down.

Loosen the following:

- Crankcase 6 mm bolts (short) [1]
- Crankcase 6 mm bolt (long) [2]

NOTE:

- Loosen the crankcase 6 mm bolts alternately from outside to inside in 2 or 3 steps.

Loosen the following:

- Crankcase 8 mm bolts (short) [3]
- Crankcase 8 mm bolts (middle) [4]
- Crankcase 8 mm bolt (long) [5]
- Crankcase 10 mm bolt [6]

NOTE:

- Loosen the crankcase 8 mm and 10 mm bolts in a crisscross pattern in 2 or 3 steps.

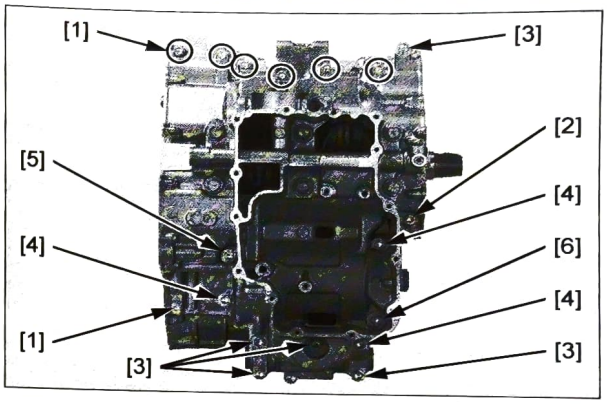

Remove the following:

- Crankcase 6 mm bolts (short) [1]
- Crankcase 6 mm bolt (long) [2]
- 6 mm sealing washers [3]
- Crankcase 8 mm bolts (short) [4]
- Crankcase 8 mm bolts (middle) [5]
- Crankcase 8 mm bolt (long) [6]
- 8 mm sealing washers [7]
- Crankcase 10 mm bolt [8]

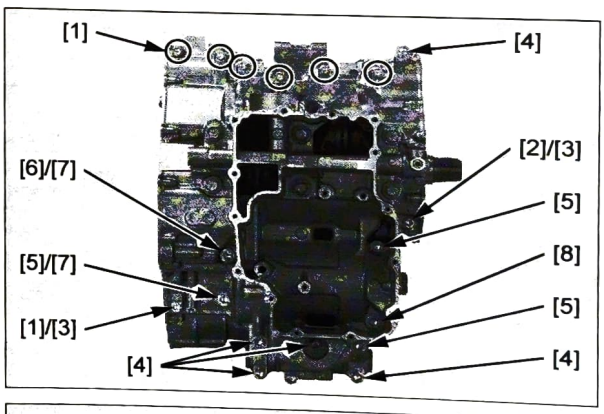

Loosen the following:

- Crankcase main journal bolts (short) [1]
- Crankcase main journal bolt (middle) [2]
- Crankcase main journal bolts (long) [3]

NOTE:

- Loosen the crankcase main journal bolts in a crisscross pattern in 2 or 3 steps.

Remove the crankcase main journal bolts.

Separate the lower crankcase from the upper crankcase.

NOTE:

- Do not pry the crankcase halves with a screwdriver.

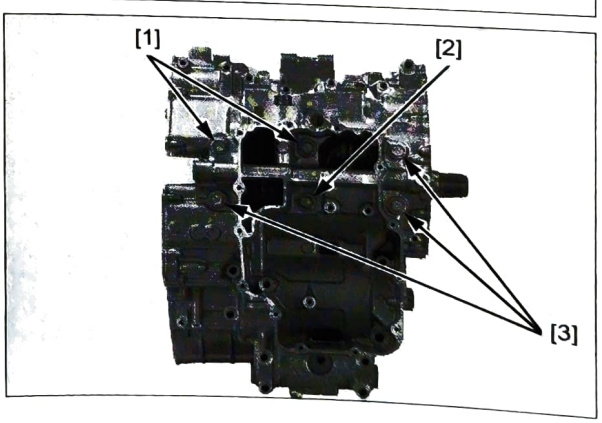

Remove the dowel pins [1], oil orifice A [2], and oil orifice B [3].

Clean any sealant off from the crankcase mating surface.

Clean the oil orifice in solvent thoroughly.

Check the oil orifice for clogs, and replace them if necessary.

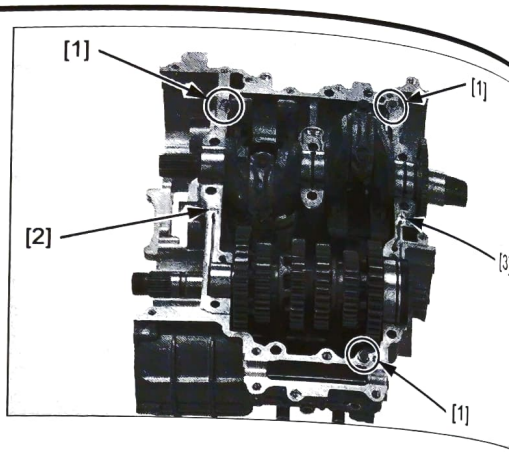

TRANSMISSION

REMOVAL

COUNTERSHAFT

Separate the crankcase halves (page 14-12).

Remove the countershaft assembly [1].

Remove the dowel pin [2].

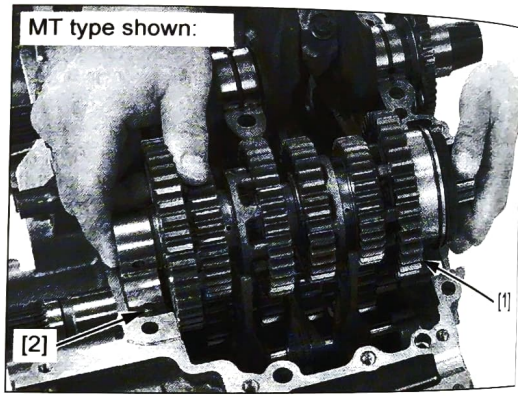

SHIFT FORK/SHIFT DRUM

Remove the countershaft (page 14-14).

Remove the shift drum bearing setting bolt/washer [1].

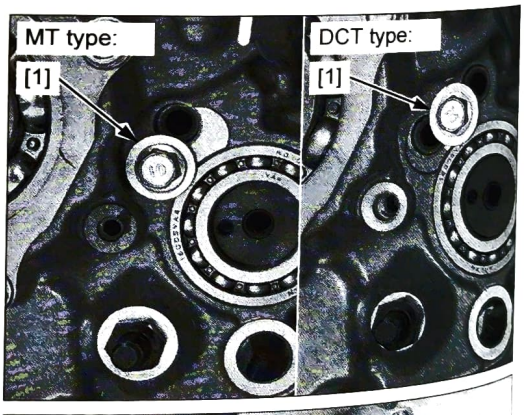

MT type: Remove the following:

- Shift fork shaft [1]
- Countershaft shift forks [2]
- Mainshaft shift fork [3]

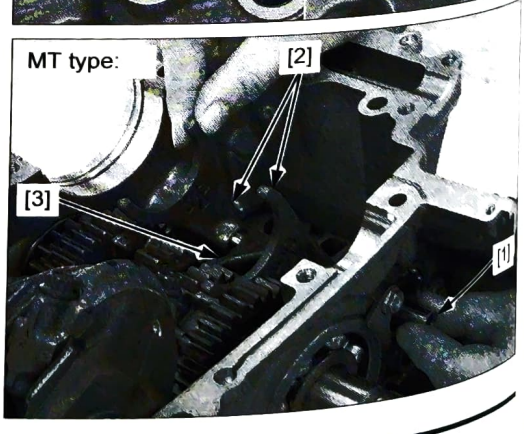

DCT type: Remove the following:

- Countershaft shift fork shaft [1]
- Countershaft shift forks [2]
- Mainshaft shift fork shaft [3]
- Mainshaft shift forks [4]

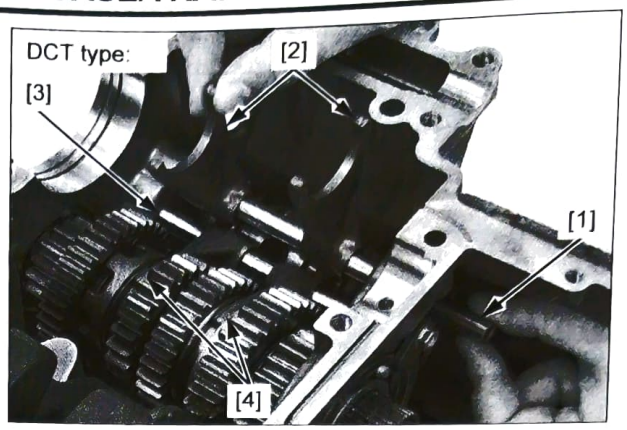

Remove the shift drum bearing setting bolt/washer [1].

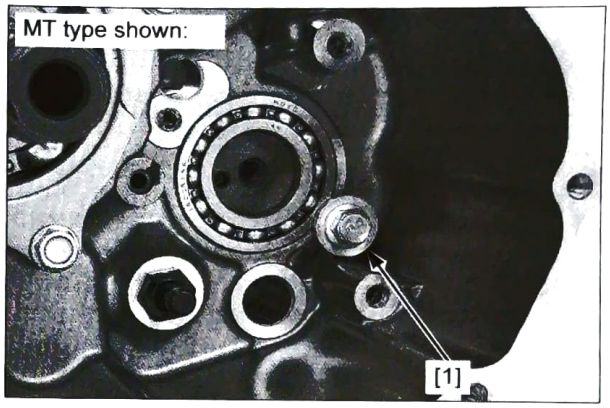

Remove the shift drum bearing [1] and shift drum [2].

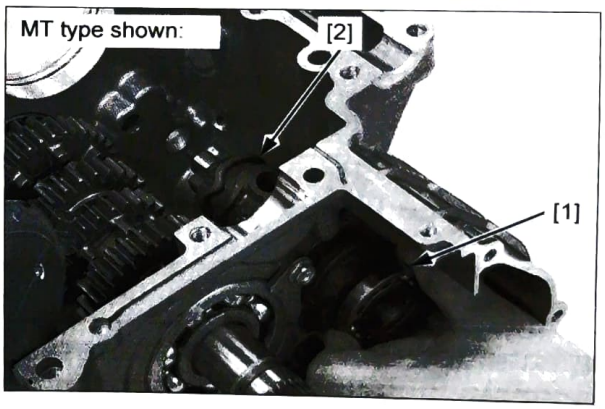

MAINSHAFT

Remove the shift forks/shift drum (page 14-14).

Remove the mainshaft bearing set plate bolts [1] and set plate [2].

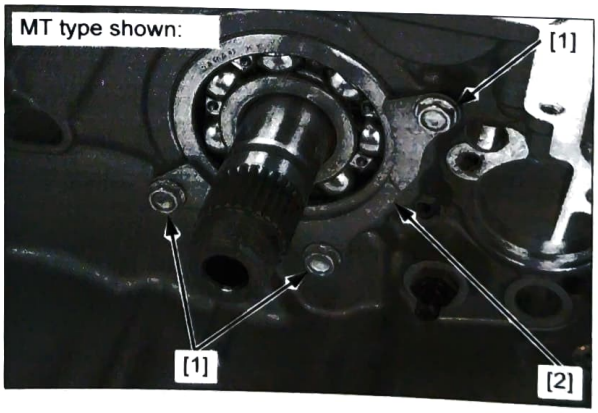

Remove the right mainshaft bearing [1] by moving the mainshaft assembly [2].

Remove the mainshaft assembly.

NOTE:

DCT type:

- When removing the mainshaft assembly, position the crankshaft [3] as shown.

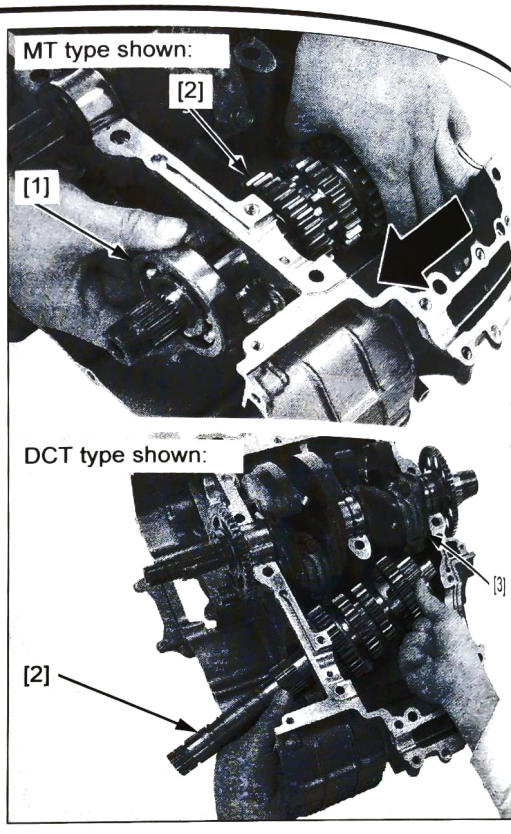

DISASSEMBLY/ASSEMBLY (MT type)

Clean all disassembled parts in solvent thoroughly.

NOTE:

- Do not expand the snap ring more than necessary for removal. To remove a snap ring, expand the snap ring and pull it off using the gear behind it.
- Keep track of the disassembled parts (gears, bushings, washers, and snap rings) by sliding them onto a tool or a piece of wire.
- Apply engine oil to the gear teeth, rotating surface and bearing.
- Apply molybdenum oil solution to the spline bushing outer surface, bushing inner and outer surface, shift fork grooves.

MAINSHAFT

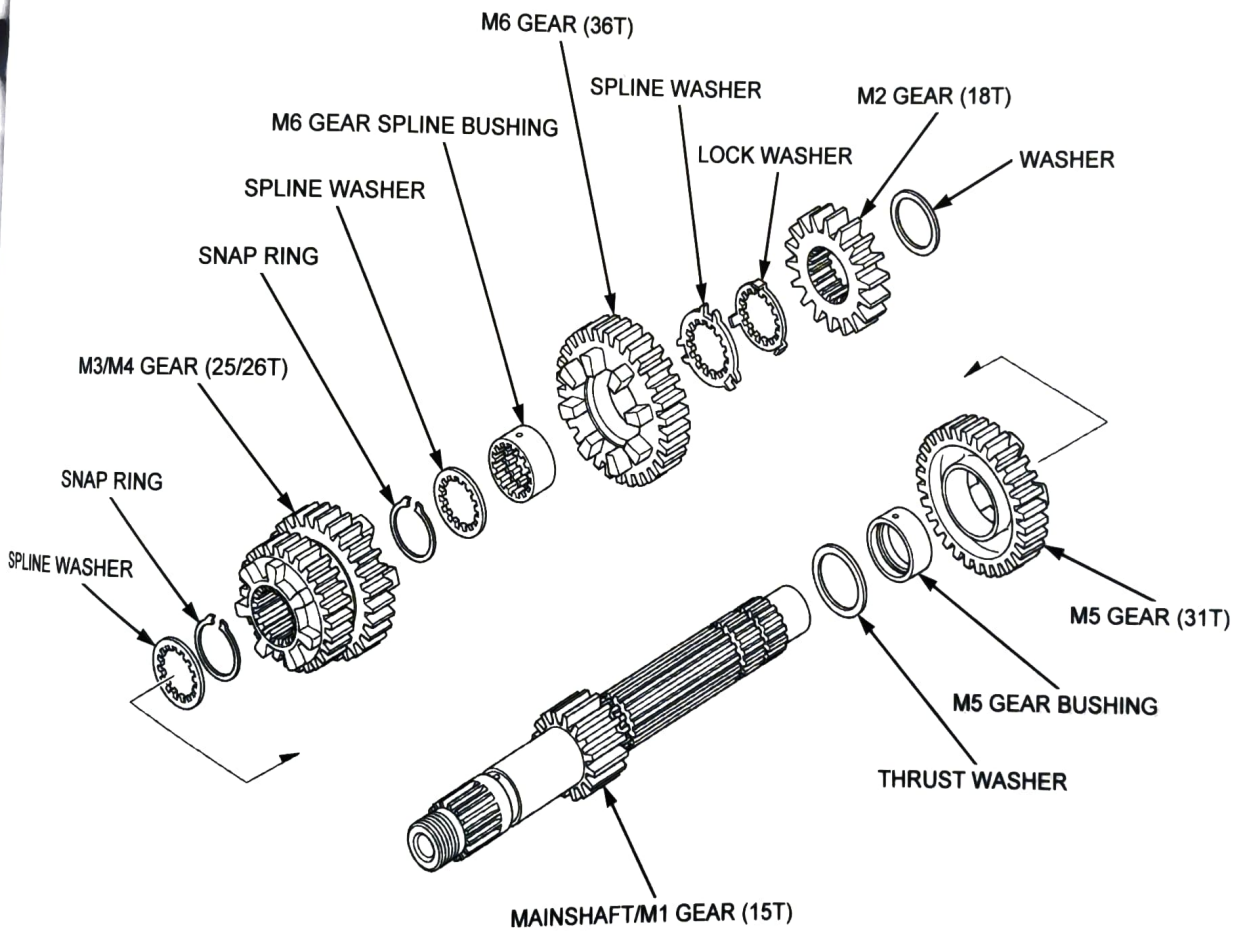

: Gear teeth, rotating surfaces

: Bushing surfaces, needle bearing surfaces, and shifter gear grooves/spline area

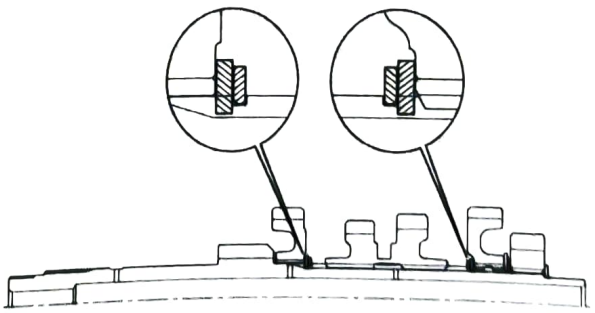

COUNTERSHAFT

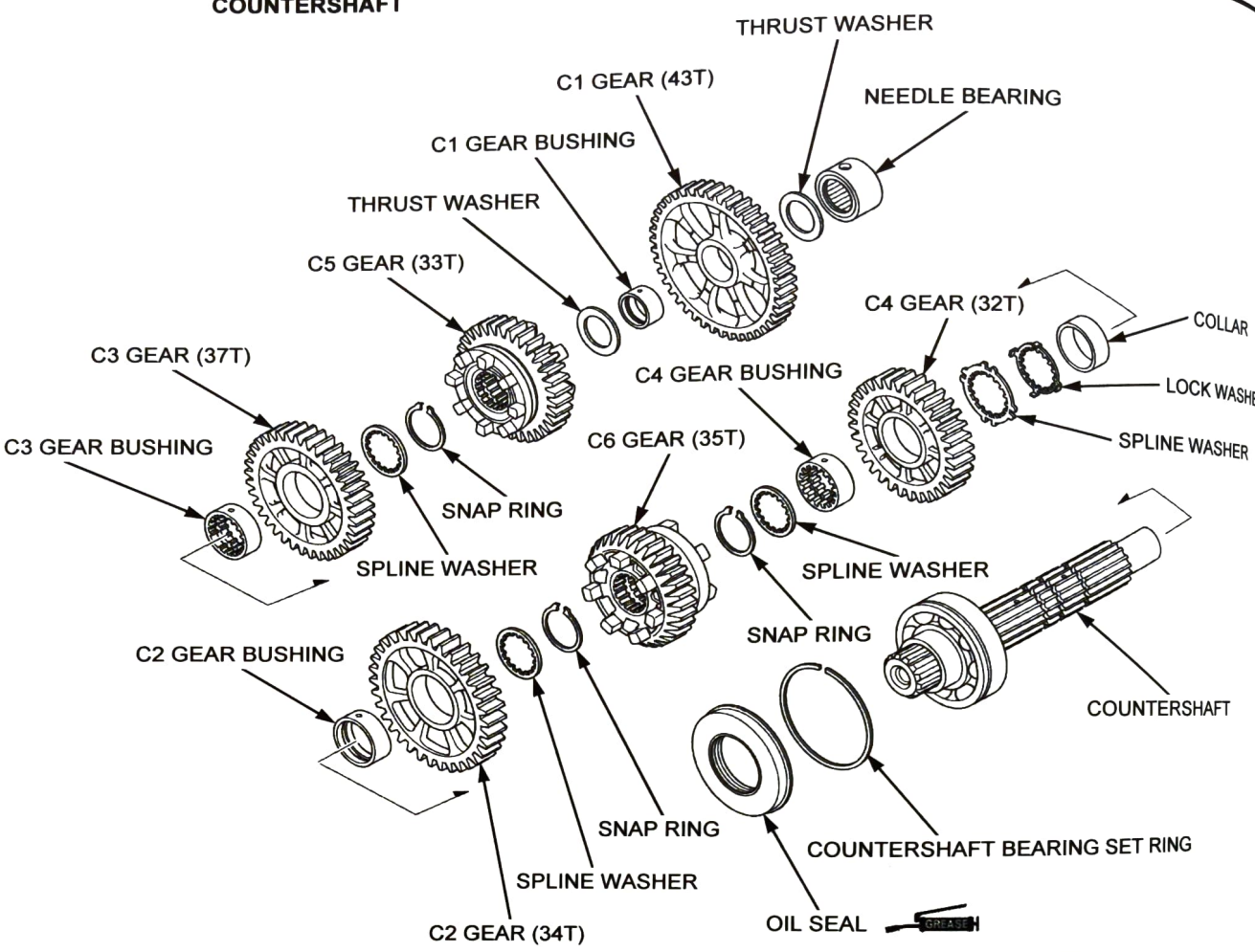

: Gear teeth, rotating surfaces

: Bushing/collar surfaces, needle bearing surfaces, and shifter gear grooves/spline area

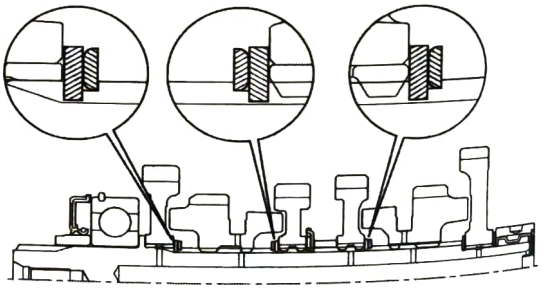

NOTE:

- Align the lock washer tabs with the spline washer grooves.
- Always install the thrust washers and snap rings with the chamfered (rolled) edge facing away from the thrust load.
- Install the snap rings [1] so that the end gap aligns with the groove of the splines.
- Make sure that the snap rings are fully seated in the shaft groove after installing them.

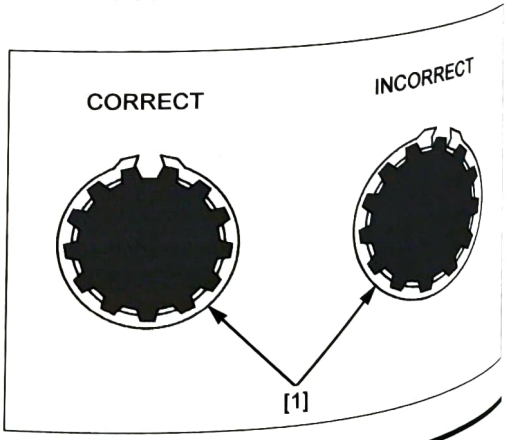

DISASSEMBLY/ASSEMBLY (DCT type)

Clean all disassembled parts in solvent thoroughly.

NOTE:

- Do not expand the snap ring more than necessary for removal. To remove a snap ring, expand the snap ring and pull it off using the gear behind it.
- Keep track of the disassembled parts (gears, bushings, washers, and snap rings) by sliding them onto a tool or a piece of wire.
- Apply engine oil to the gear teeth, rotating surface and bearing.
- Apply molybdenum oil solution to the spline bushing outer surface, bushing inner and outer surface, shift fork grooves.

MAINSHAFT

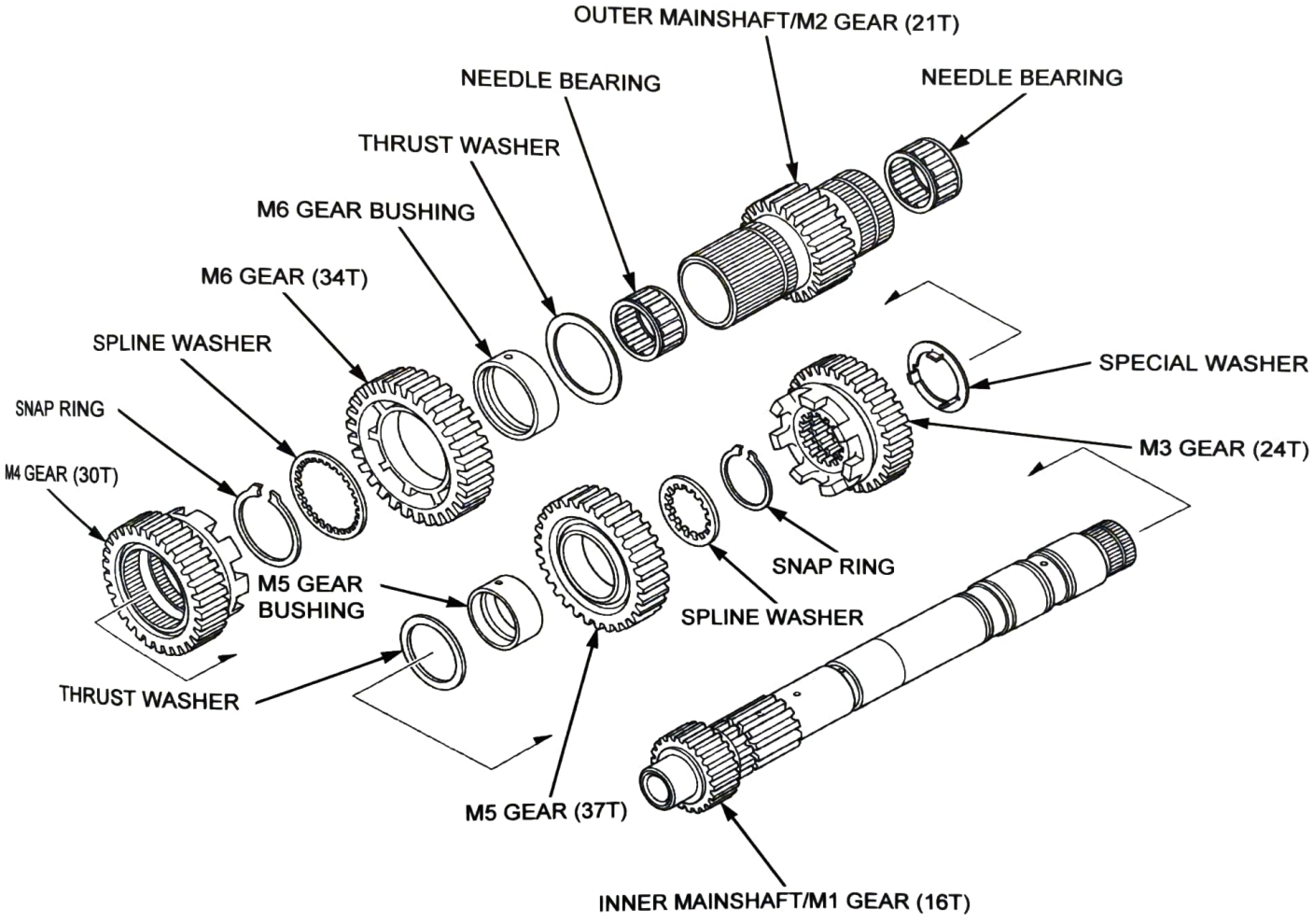

: Gear teeth, rotating surfaces

: Bushing surfaces, needle bearing surfaces, and shifter gear grooves/spline area

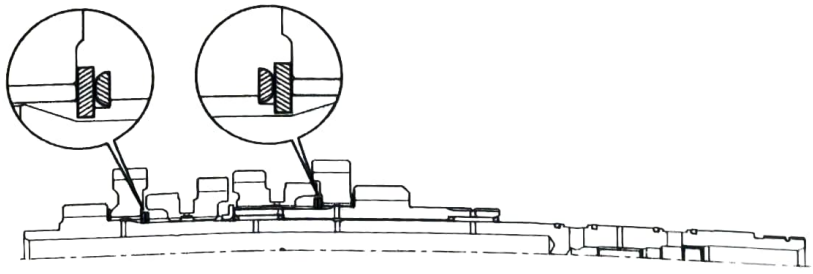

COUNTERSHAFT

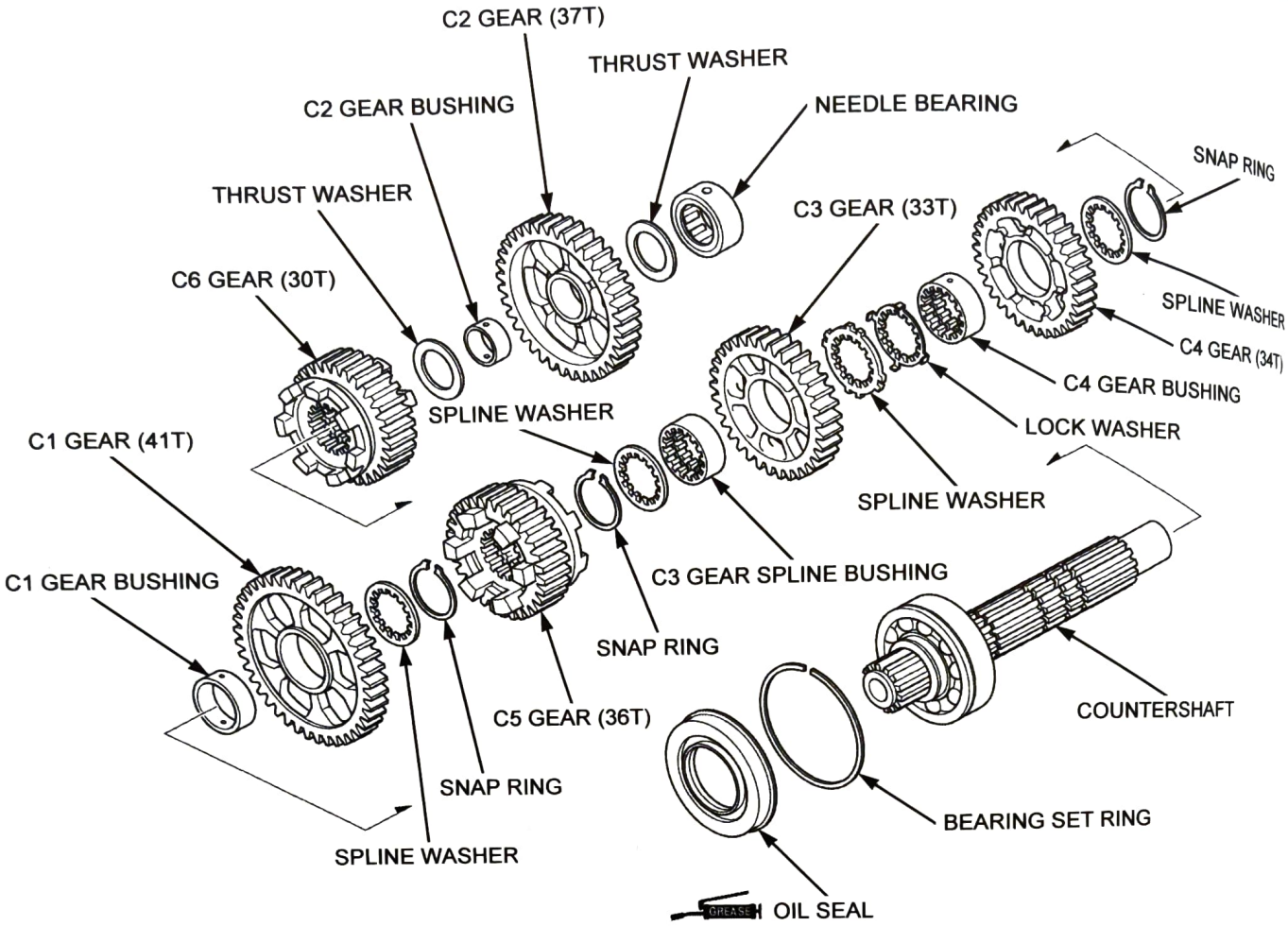

: Gear teeth, rotating surfaces

: Bushing surfaces, needle bearing surfaces, and shifter gear grooves/spline area

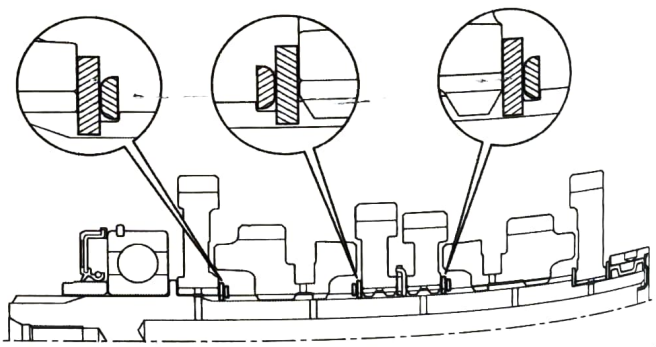

NOTE:

- Align the lock washer tabs with the spline washer grooves.
- Always install the thrust washers and snap rings with the chamfered (rolled) edge facing away from the thrust load.
- Install the snap rings [1] so that the end gap aligns with the groove of the splines.
- Make sure that the snap rings are fully seated in the shaft groove after installing them.

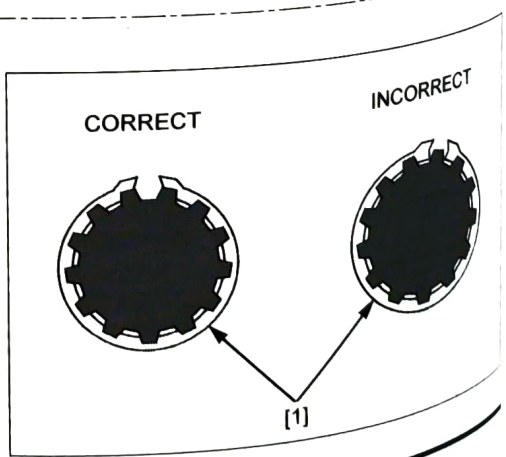

INSPECTION

Inspect the following parts for scratches, damage, abnormal wear, or deformation.

- Transmission gears
- Transmission bushings
- Transmission bearings
- Shift drum/bearing
- Shift forks
- Shift fork shafts

Measure each part according to CRANKCASE/ TRANSMISSION SPECIFICATIONS (page 1-7).

Replace any part if it is out of service limit.

UPPER CRANKCASE BEARING REPLACEMENT (MT type)

Before replacing the bearing, remove the following:

- Transmission (page 14-14)
- Crankshaft (page 15-4)
- Piston (page 15-12)

LEFT MAINSHAFT BEARING

Remove the left mainshaft bearing [1] using the below special tools.

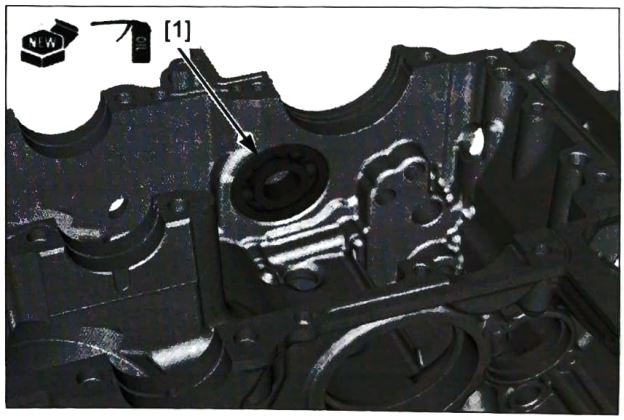

TOOLS:

Bearing remover shaft set, 25 mm	**07936-ZV10100 or 07936-ZV1A100 (U.S.A. only)**
Remover weight	**07741-0010201 or 07936-371020A (U.S.A. only) or commercially available 3/8" x 16 slide hammer (U.S.A. only)**

Apply engine oil to a new left mainshaft bearing.

Drive in the left mainshaft bearing until it is fully seated using the below special tools.

TOOLS:

Driver, 15 x 280L	**07949-3710001**
Attachment, 52 x 55 mm	**07746-0010400**
Pilot, 25 mm	**07746-0040600**

NOTE:

- Drive in a new bearing squarely with the marked side facing in.

Install the removed parts in the reverse order of removal.

UPPER CRANKCASE BEARING REPLACEMENT (DCT type)

Before replacing the bearings, remove the following:

- Transmission (page 14-14)
- Crankshaft (page 15-4)
- Piston (page 15-12)

LEFT MAINSHAFT BEARING

Remove the left mainshaft bearing [1] using the below special tools.

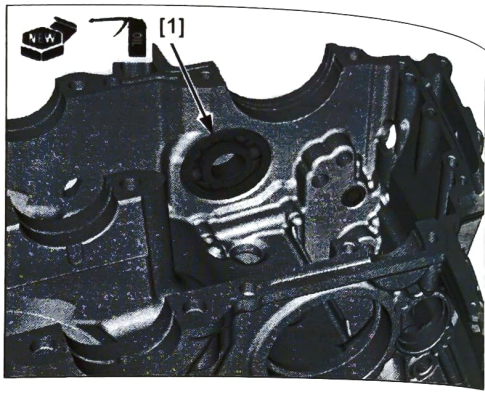

TOOLS:

Bearing remover shaft set, 25 mm	**07936-ZV10100 or 07936-ZV1A100 (U.S.A. only)**
Remover weight	**07741-0010201 or 07936-371020A (U.S.A. only) or commercially available 3/8" x 16 slide hammer (U.S.A. only)**

Apply engine oil to a new left mainshaft bearing.

Drive in the left mainshaft bearing until it is fully seated using the below special tools.

TOOLS:

Driver, 15 x 280L	**07949-3710001**
Attachment, 52 x 55 mm	**07746-0010400**
Pilot, 25 mm	**07746-0040600**

NOTE:

- Drive in a new bearing squarely with the marked side facing in.

Install the removed parts in the reverse order of removal.

SHIFT DRUM NEEDLE BEARING

Drive out the shift drum needle bearing [1].

Apply engine oil to a new needle bearing.

Drive in the needle bearing until it is in position as shown using the below special tools.

TOOLS:

Driver, 15 x 280L	**07949-3710001**
Pilot, 12 mm	**07746-0040200**

NOTE:

- Drive in a new needle bearing squarely with the marked side facing out.

Install the removed parts in the reverse order of removal.

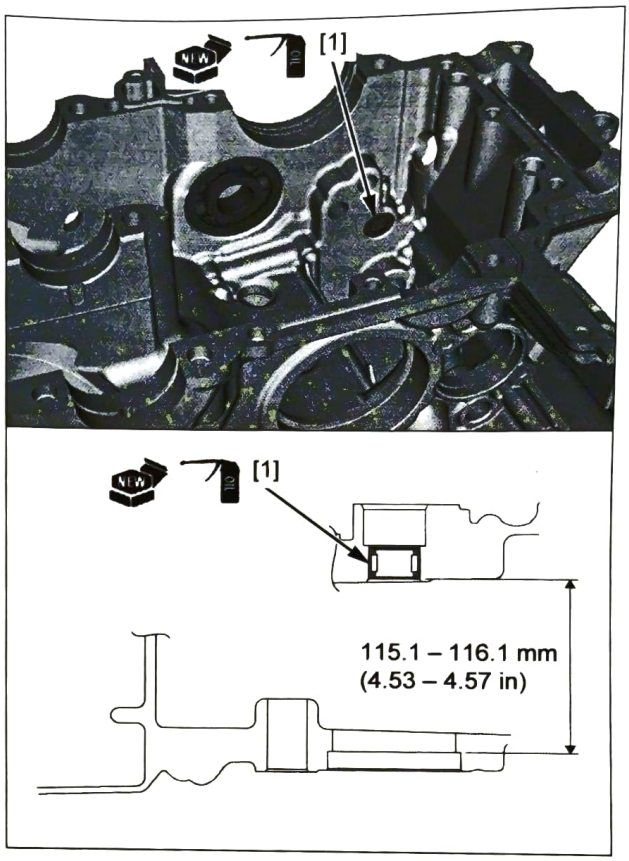

SHIFT CONTROL MOTOR REDUCTION GEAR BEARING

Heat the upper crankcase to 80°C (176°F) evenly using a heat gun.

NOTE:

- Do not use a torch to heat the upper crankcase; it may cause warping.

Tap the upper crankcase lightly and remove the following bearings.

- Radial ball bearing (607ZZ) [1]
- Radial ball bearing (696ZZ) [2]

Apply engine oil to new bearings.

Drive in the bearings squarely until they are fully seated.

NOTE:

- Drive in the bearings with the marked side facing toward the outside of the crankcase.

Install the removed parts in the reverse order of removal.

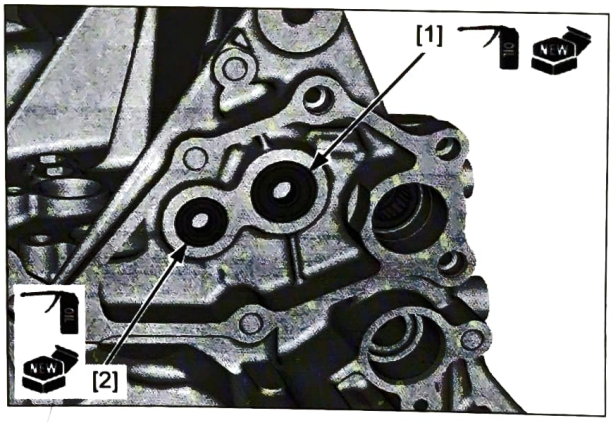

GEARSHIFT SPINDLE NEEDLE BEARING

Heat the upper crankcase to 80°C (176°F) evenly using a heat gun.

NOTE:
- Do not use a torch to heat the upper crankcase; it may cause warping.

Tap the upper crankcase lightly and remove the gearshift spindle needle bearing [1].

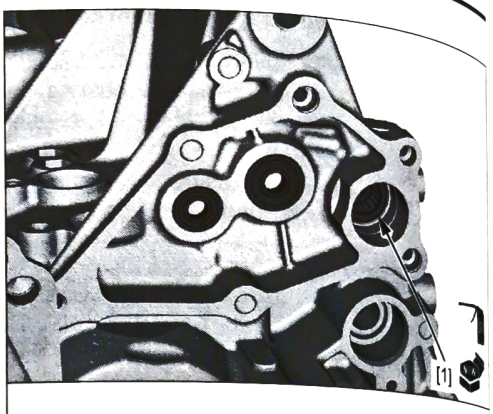

Apply engine oil to a new needle bearing.

Drive in the needle bearing until it is in position as shown using the below special tool.

TOOL:
Seal driver, 14 x 22 mm **07PPD-YE10100**

NOTE:
- Drive in the needle bearing with the marked side facing toward the outside of the crankcase.

Install the removed parts in the reverse order of removal.

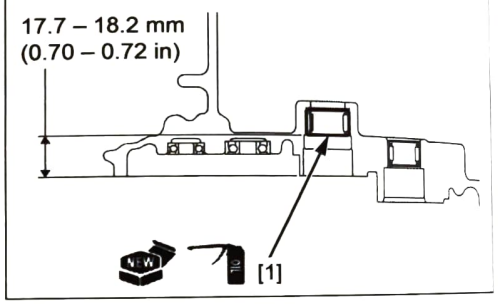

INSTALLATION

MAINSHAFT

Install the mainshaft assembly [1] into the upper crankcase.

NOTE:
DCT type:
- When installing the mainshaft assembly, position the crankshaft [2] as shown.

Insert the mainshaft end to the left mainshaft bearing [3].

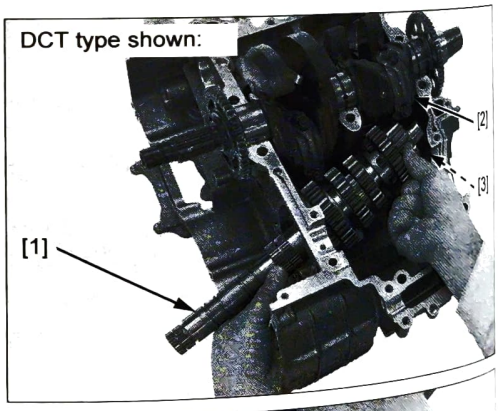

Apply engine oil to the right mainshaft bearing.

Install the right mainshaft bearing [1] into the upper crankcase.

NOTE:
- Install the bearing into the crankcase with the marked side facing out.

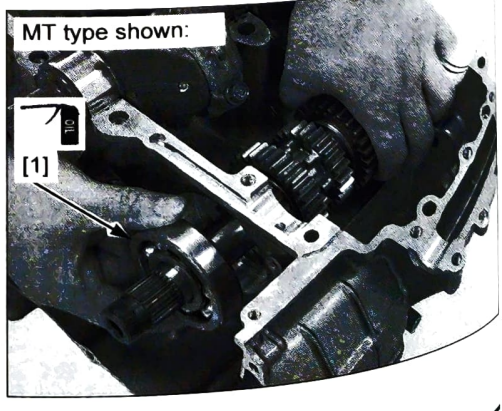

Apply locking agent to the mainshaft bearing set plate bolts threads (page 1-21).

Install the mainshaft bearing set plate [1].

Install and tighten the mainshaft bearing set plate bolts [2] to the specified torque.

TORQUE: 12 N·m (1.2 kgf·m, 9 lbf·ft)

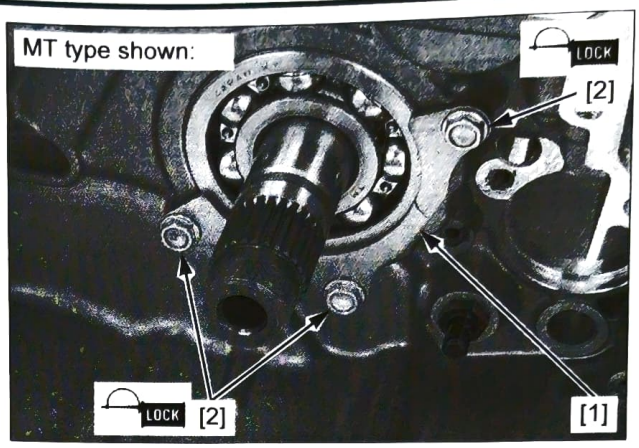

SHIFT DRUM/SHIFT FORK

Apply engine oil to the shift drum bearing.

Install the shift drum [1] and shift drum bearing [2] into the lower crankcase.

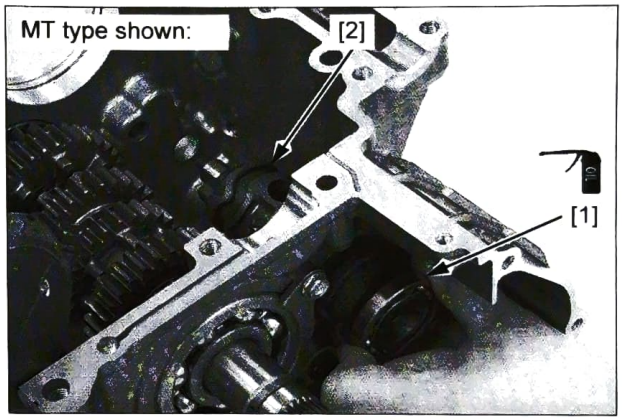

Apply locking agent to the shift drum bearing setting bolt/washer threads (page 1-21).

Install and tighten the shift drum bearing setting bolt/washer [1] to the specified torque.

TORQUE: 12 N·m (1.2 kgf·m, 9 lbf·ft)

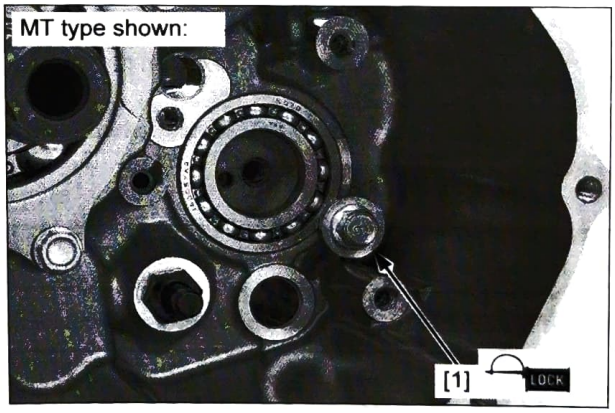

The shift forks have the following identification marks:

- MT type:
  - "C" mark [1]: mainshaft shift fork
  - No mark [2]: left/right countershaft shift fork
- DCT type:
  - "L" mark [3]: left mainshaft shift fork
  - "R" mark [4]: right mainshaft shift fork
  - "C" mark [5]: countershaft shift fork

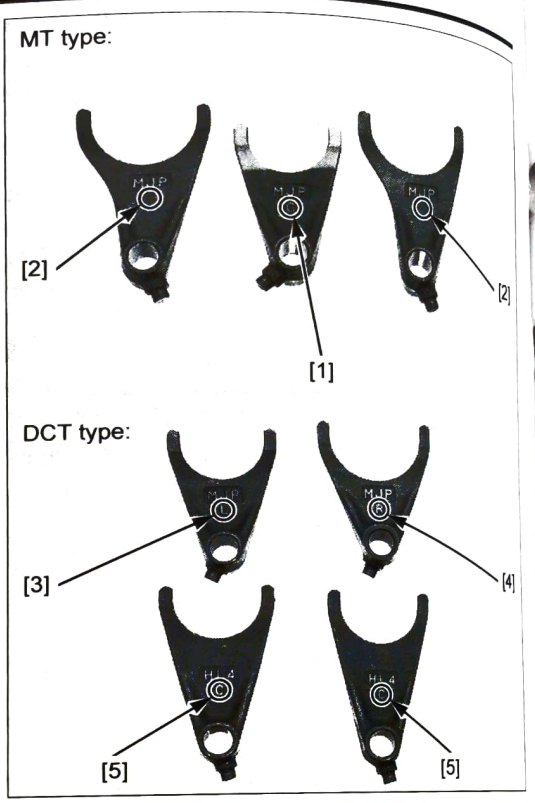

MT type: Apply molybdenum oil solution to the shift fork shaft outer surface.

Install the mainshaft shift fork [1] into the M3/M4 gear with the identification marks facing toward the right side of the engine.

Install the countershaft shift forks [2] with the identification marks facing toward the right side of the engine.

Insert the shift fork shaft [3].

NOTE:

- Make sure that each shift fork guide pin is positioned in the correct guide grooves of the shift drum.

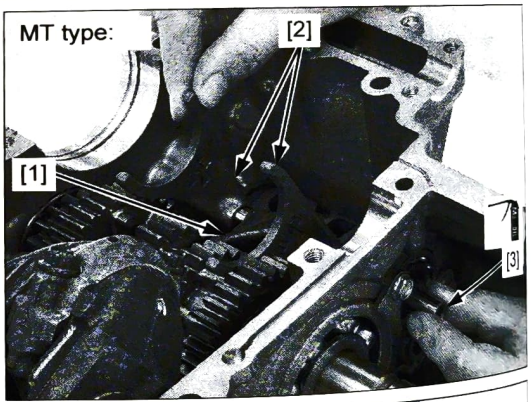

DCT type: Install the following with the identification marks facing toward the right side of the engine:

- Left mainshaft shift fork [1] into the M3 gear
- Right mainshaft shift fork [2] into the M4 gear

Apply molybdenum oil solution to the shift fork shafts outer surface.

Insert the mainshaft shift fork shaft [3].

Install the countershaft shift forks [4] with the identification marks facing toward the left side of the engine.

Insert the countershaft shift fork shaft [5].

NOTE:

- Make sure that each shift fork guide pin is positioned in the correct guide grooves of the shift drum.

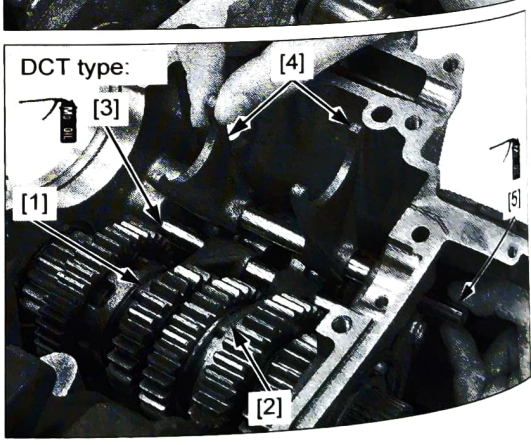

Apply locking agent to the shift drum bearing setting bolt/washer threads (page 1-21).

Install and tighten the shift drum bearing setting bolt/washer [1] to the specified torque.

TORQUE: 12 N·m (1.2 kgf·m, 9 lbf·ft)

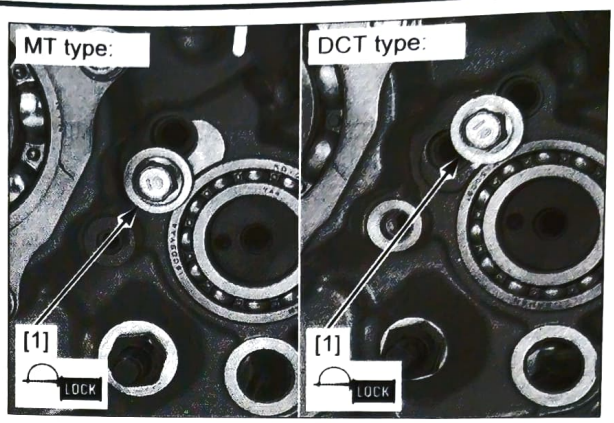

COUNTERSHAFT

Install the dowel pin [1] into the upper crankcase hole.

Install the countershaft assembly [2].

NOTE:

- Align the needle bearing cap hole [3] with the dowel pin.
- Align the set ring with the upper crankcase groove.
- Align the oil seal flange with the upper crankcase groove.

Assemble the crankcase halves (page 14-27).

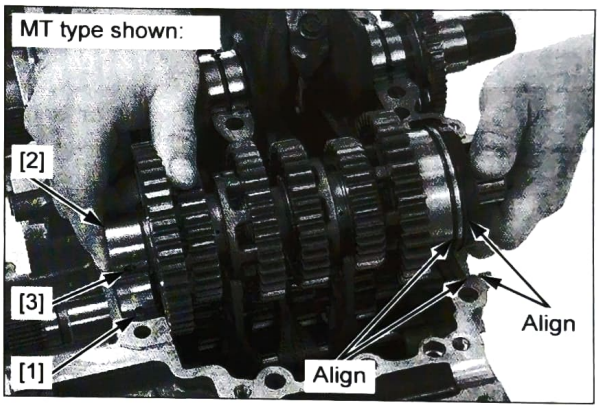

CRANKCASE ASSEMBLY

Apply liquid sealant (TB1207B manufactured by Three Bond or equivalent) to the crankcase mating surface as shown.

NOTE:

- Do not apply anymore liquid sealant than necessary.
- Do not apply liquid sealant to the crankcase main journal bolts area and the oil passage area.

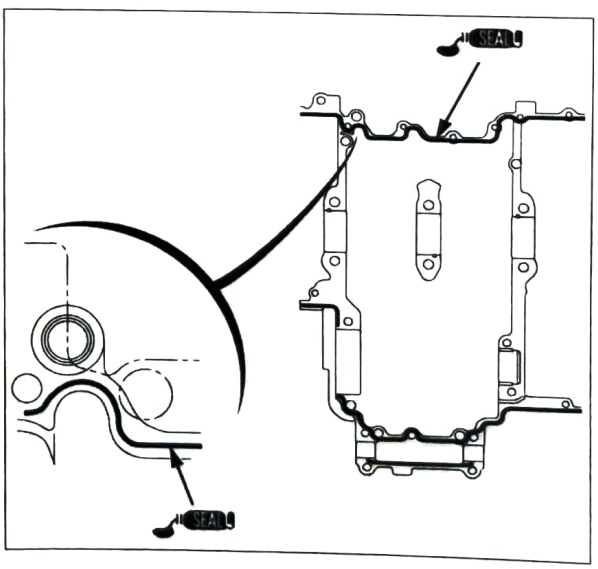

Install the dowel pins [1], oil orifice A [2], and oil orifice B [3] into the upper crankcase.

NOTE:
- Install the oil orifice A with its narrow hole side facing the upper crankcase.

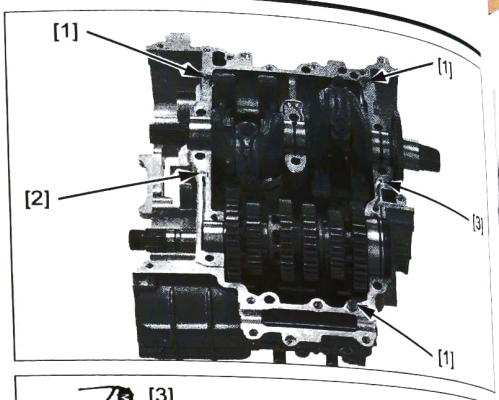

Apply molybdenum oil solution to the main journal bearing sliding surfaces on the lower crankcase.

Install the lower crankcase onto the upper crankcase.

NOTE:
- Make sure the upper and lower crankcases are seated securely.

Apply molybdenum oil solution to the following bolt threads and seating surfaces.

Install and tighten the following bolts to the specified torque:

– Crankcase main journal bolts (long) [1]
– Crankcase main journal bolt (middle) [2]
– Crankcase main journal bolts (short) [3]

TORQUE: 43 N·m (4.4 kgf·m, 32 lbf·ft)

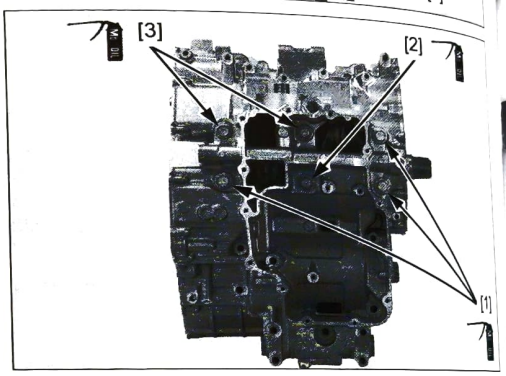

NOTE:
- Tighten the crankcase main journal bolts in a crisscross pattern in 2 or 3 steps.

Install the following:

– Crankcase 10 mm bolt [1]
– New 8 mm sealing washers [2]
– Crankcase 8 mm bolt (long) [3]
– Crankcase 8 mm bolts (middle) [4]
– Crankcase 8 mm bolts (short) [5]
– New 6 mm sealing washers [6]
– Crankcase 6 mm bolt (long) [7]
– Crankcase 6 mm bolts (short) [8]

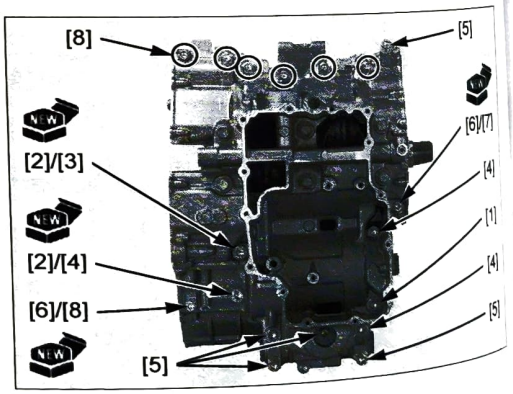

Tighten the following bolts to the specified torque:

- Crankcase 10 mm bolt [1]
- Crankcase 8 mm bolt (long) [2]
- Crankcase 8 mm bolts (middle) [3]
- Crankcase 8 mm bolts (short) [4]

TORQUE:
Crankcase 10 mm bolt:
39 N·m (4.0 kgf·m, 29 lbf·ft)
Crankcase 8 mm bolt (long/middle/short):
24 N·m (2.4 kgf·m, 18 lbf·ft)

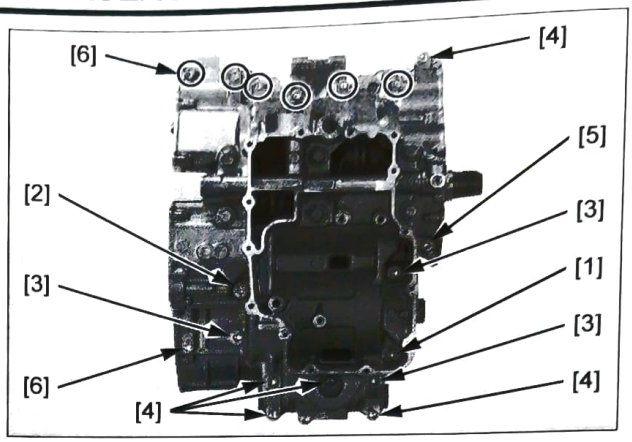

NOTE:
- Tighten the crankcase 10 mm and 8 mm bolts in a crisscross pattern in 2 or 3 steps.

Tighten the crankcase 6 mm bolt (long) [5] and 6 mm bolt (short) [6] securely.

NOTE:
- Tighten the crankcase 6 mm bolts alternately from inside to outside in 2 or 3 steps.

DCT type: Install the timing sprocket [1].

NOTE:
- Install the timing sprocket with its punch mark [2] facing outside as shown.
- Align the timing sprocket wide teeth with the crankshaft wide teeth.

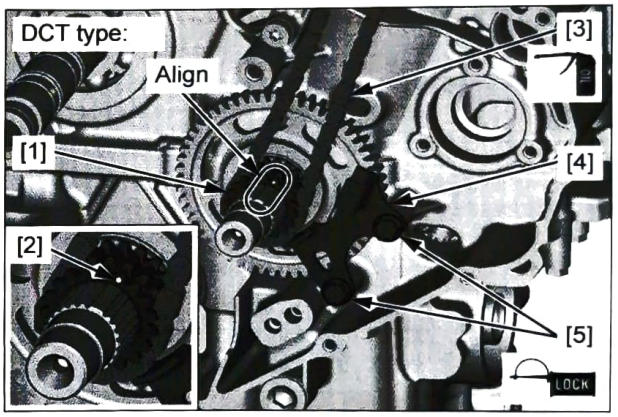

Coat the cam chain with engine oil.

Install the cam chain [3].

Apply locking agent to the cam chain guide plate bolts threads (page 1-21).

Install the cam chain guide plate [4] and cam chain guide plate bolts [5].

Tighten the cam chain guide plate bolts securely.

Install the removed parts to the crankcase by referring to the Service Information in the beginning of this section (page 14-2).

Coat a new O-ring with engine oil.

Install the O-ring [1] into the groove of the water hose flange [2].

Install and tighten the bolts [3] securely.

Install the engine (page 16-9).

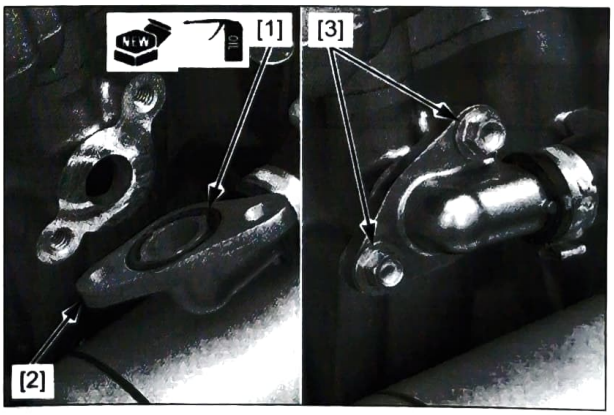

MEMO

15. CRANKSHAFT/PISTON/CYLINDER

SERVICE INFORMATION 15-2

TROUBLESHOOTING 15-2

COMPONENT LOCATION 15-3

CRANKSHAFT 15-4

MAIN JOURNAL BEARING 15-6

CRANKPIN BEARING 15-9

PISTON/CYLINDER 15-12

SERVICE INFORMATION

GENERAL

- The crankcase must be separated to service the crankshaft, pistons and connecting rods.
- Mark and store the connecting rods, crankpin bearing caps, crankpin bearing and main journal bearing to be sure of their correct locations for reassembly.
- The crankpin bearing and main journal bearing are select fits and are identified by color codes. Select replacement bearings from the selection tables. After selecting new bearings, recheck the oil clearance with plastigauge. Incorrect oil clearance can cause severe engine damage.
- Clean the oil passages in the upper crankcase with compressed air before installing the pistons.

TROUBLESHOOTING

Cylinder compression is too low, hard to starting, or poor performance at low speed
- Leaking cylinder head gasket
- Loose spark plug
- Worn, stuck or broken piston ring
- Worn or damaged cylinder and piston

Cylinder compression too high, overheating, or knocking
- Excessive carbon built-up on piston head or combustion chamber

Excessive smoke
- Worn cylinder, piston, or piston ring
- Improper installation of piston rings
- Scored or scratched piston or cylinder inner surface

Abnormal noise
- Worn piston pin or piston pin hole
- Worn connecting rod small end
- Bent connecting rod
- Worn cylinder, piston, or piston rings
- Worn main journal bearings
- Worn crankpin bearings

Engine vibration
- Excessive crankshaft runout

COMPONENT LOCATION

MT type shown:

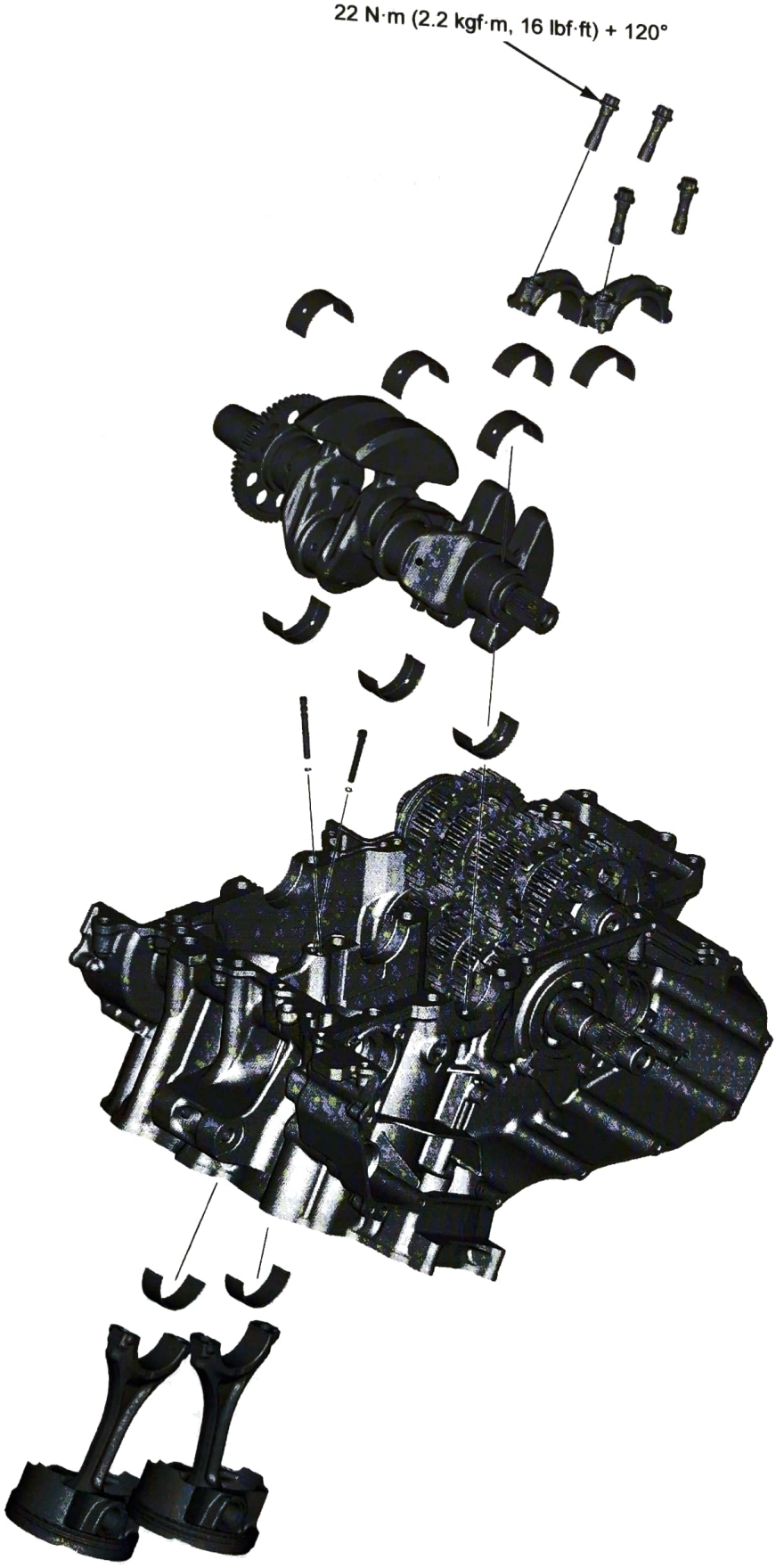

CRANKSHAFT

Separate the crankcase halves (page 14-12).

SIDE CLEARANCE INSPECTION

Measure the connecting rod side clearance.

SERVICE LIMIT: 0.35 mm (0.014 in)

If the clearance exceeds the service limit, replace the connecting rod.
Recheck and if it is still out of limit, replace the crankshaft.

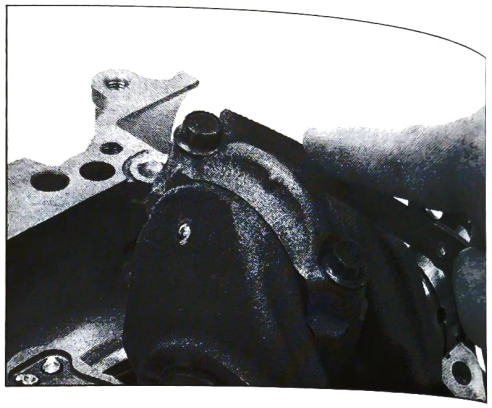

REMOVAL

NOTICE

Mark the crankpin bearing caps and bearings as you remove them to indicate the correct cylinder for reassembly.

Remove the crankpin bearing cap bolts [1] and crankpin bearing caps [2].

Remove the crankshaft [3].

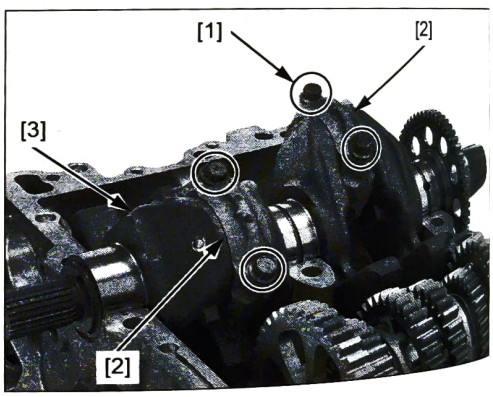

INSPECTION

Support the crankshaft [1] on both end journals.

Set a dial gauge on the crankshaft.

Rotate the crankshaft two revolutions (720°) and read the runout.

SERVICE LIMIT:
0.03 mm (0.001 in)

Check the balancer drive gear teeth for abnormal wear or damage.

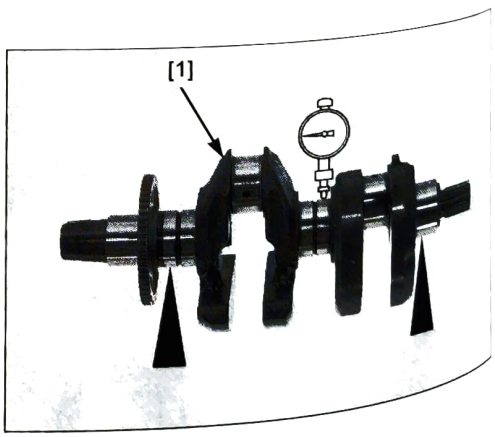

INSTALLATION

Apply molybdenum oil solution to the main journal bearing [1] sliding surfaces on the upper crankcase.

Apply molybdenum oil solution to the crankpin bearing [2] sliding surfaces on the connecting rods.

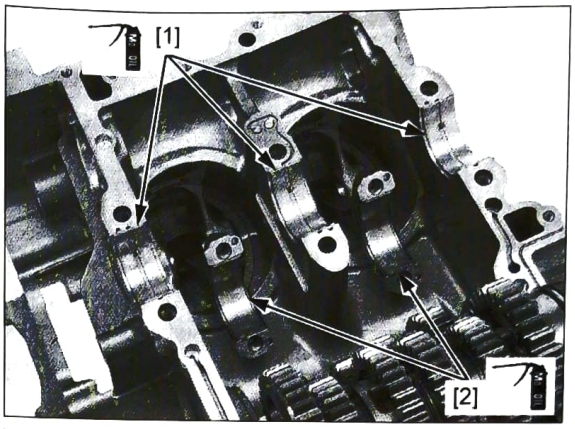

Apply molybdenum oil solution to the thrust surfaces of the crankshaft as shown.

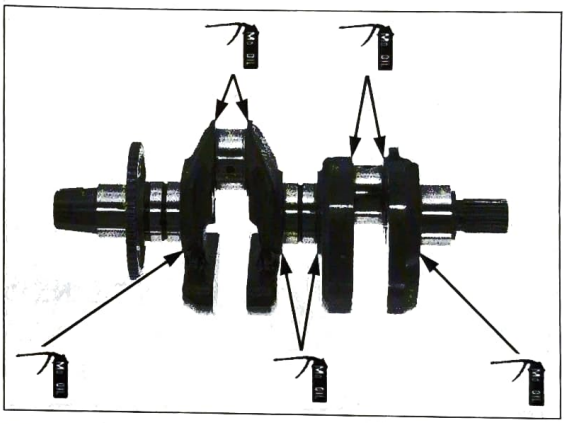

Install the crankshaft [1] onto the upper crankcase and set the connecting rods onto the crankpins.

NOTE:

- Be careful not to damage the crankpin, main journal and main journal bearings.

Apply molybdenum oil solution to the crankpin bearing sliding surfaces on the crankpin bearing caps [2].

Install the crankpin bearing caps.

NOTE:

- Align the I.D. code number on the crankpin bearing caps and connecting rods.

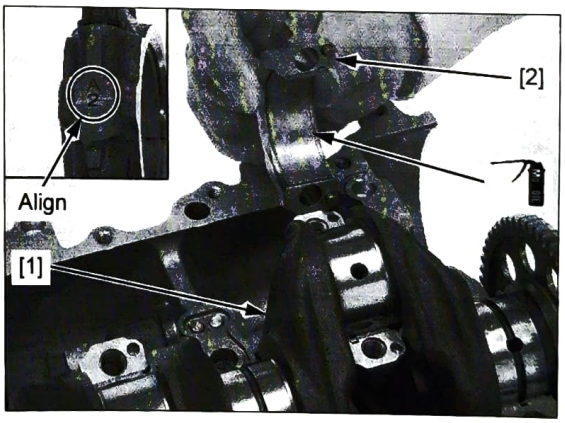

Apply engine oil to new crankpin bearing cap bolt threads and seating surfaces.

Install and tighten the crankpin bearing cap bolts [1] to the specified torque in 2 or 3 steps alternately.
Then tighten the bolts 120°.

TORQUE: 22 N·m (2.2 kgf·m, 16 lbf·ft) + 120°

Assemble the crankcase halves (page 14-27).

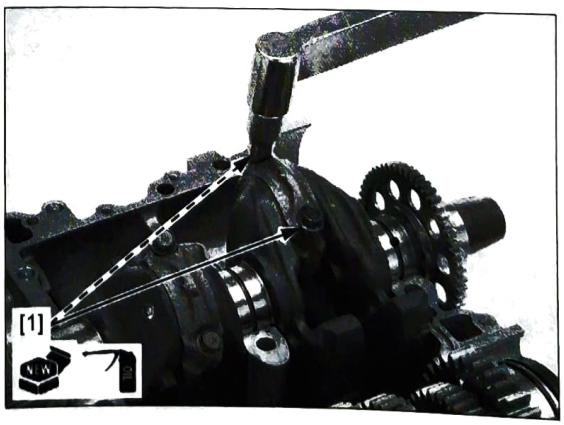

MAIN JOURNAL BEARING

NOTICE

Do not interchange the main journal bearings. They must be installed in their original locations or the correct bearing oil clearance may not be obtained, resulting in severe engine damage.

Remove the crankshaft (page 15-4).

BEARING INSPECTION

Inspect the main journal bearings [1] on the upper and lower crankcase halves for unusual wear or peeling.

Check the main journal bearing tabs for damage.

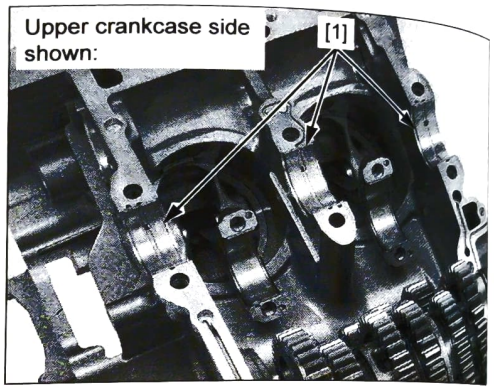

OIL CLEARANCE INSPECTION

NOTE:

- Do not rotate the crankshaft during inspection.

Clean off any oil from the main journal bearings and main journals.

Install the crankshaft [1] onto the upper crankcase.

Lay a strip of plastigauge [2] lengthwise on each main journal and be sure to avoid the oil hole.

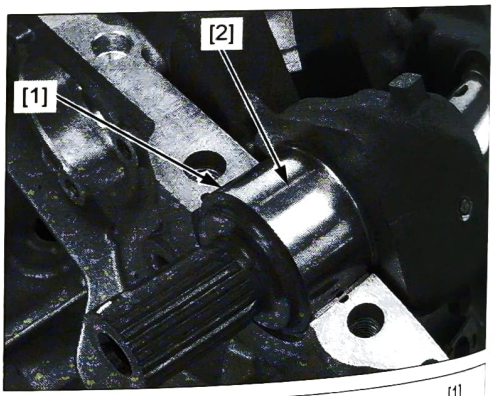

Install the dowel pins [1].

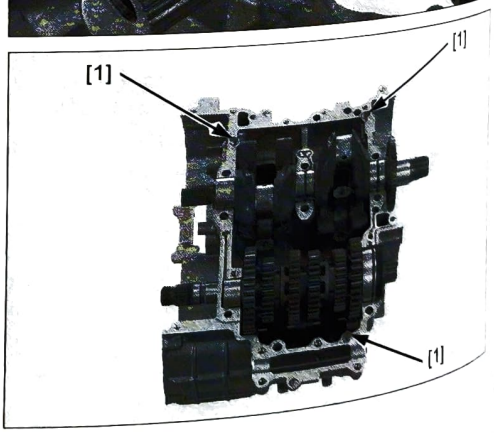

Install the lower crankcase onto the upper crankcase.

NOTE:

- Make sure the upper and lower crankcases are seated securely.

Apply molybdenum oil solution to the following bolt threads and seating surfaces.

Install and tighten the following bolts to the specified torque:

- Crankcase main journal bolts (long) [1]
- Crankcase main journal bolt (middle) [2]
- Crankcase main journal bolts (short) [3]

TORQUE: 43 N·m (4.4 kgf·m, 32 lbf·ft)

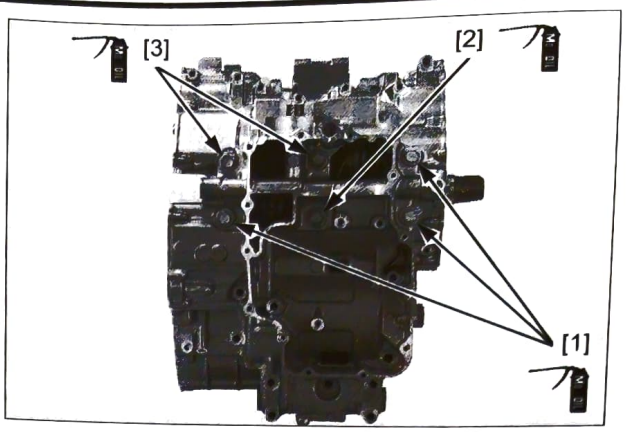

NOTE:

- Tighten the crankcase main journal bolts in a crisscross pattern in 2 or 3 steps.

Loosen the following:

- Crankcase main journal bolts (short) [1]
- Crankcase main journal bolt (middle) [2]
- Crankcase main journal bolts (long) [3]

NOTE:

- Loosen the crankcase main journal bolts in a crisscross pattern in 2 or 3 steps.

Remove the crankcase main journal bolts.

Separate the lower crankcase from the upper crankcase.

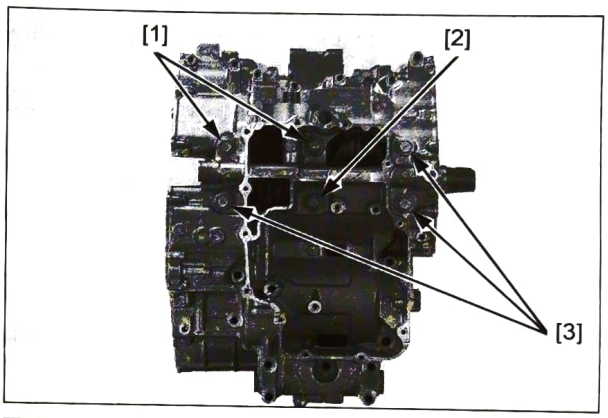

Measure the compressed plastigauge at its widest point on each main journal to determine the oil clearance.

SERVICE LIMIT: 0.05 mm (0.002 in)

If the oil clearance exceeds the service limit, select the replacement bearing (page 15-7).

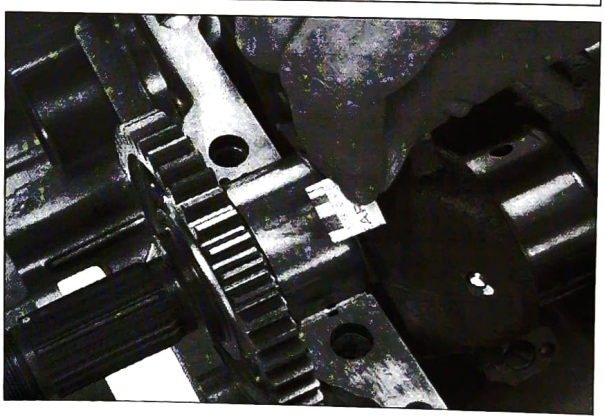

MAIN JOURNAL BEARING SELECTION

Record the crankcase bearing support I.D. code letters [1] from left side of the upper crankcase as shown.

NOTE:

- Letters (A, B or C) on the left side of the upper crankcase are the bearing support I.D. codes from left to right.

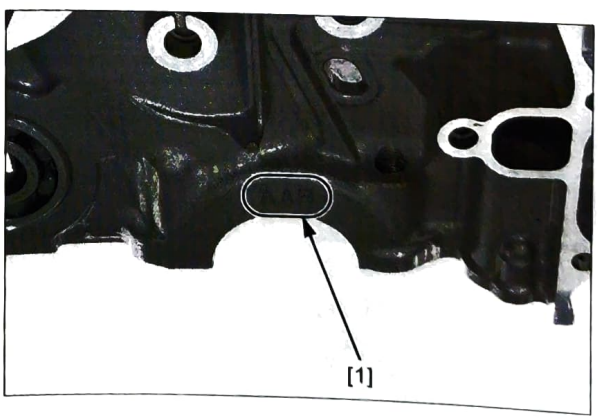

If you are replacing the crankshaft, record the corresponding main journal O.D. code numbers [1] from the crank weight.

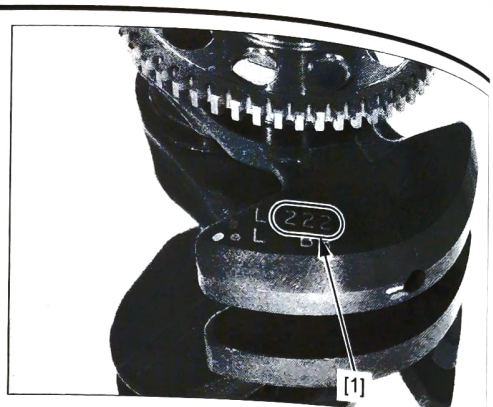

NOTE:

- Numbers (1, 2 or 3) on the crank weight are main journal O.D. codes from left to right.

If you are reusing the crankshaft, measure the main journal O.D. with a micrometer.

Determine the replacement bearing color code [1] with the main journal O.D. code number or the measured main journal O.D., and the crankcase bearing support I.D. code.

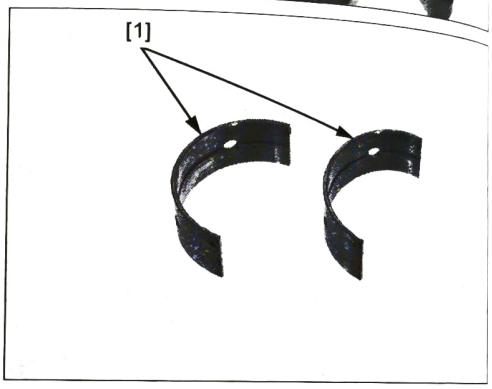

Refer to the main journal bearing selection table below for bearing selection.

MAIN JOURNAL BEARING THICKNESS:

A: Blue: Thickest
B: Black:
C: Brown:
D: Green:
E: Yellow: Thinnest

MAIN JOURNAL BEARING SELECTION TABLE:

			BEARING SUPPORT I.D. CODE		
			A	B	C
			47.000 – 47.006 mm (1.8504 – 1.8506 in)	47.006 – 47.012 mm (1.8506 – 1.8509 in)	47.012 – 47.018 mm (1.8509 – 1.8511 in)
MAIN JOURNAL O.D. CODE NUMBER	1	44.004 – 44.010 mm (1.7324 – 1.7327 in)	E (Yellow)	D (Green)	C (Brown)
	2	43.998 – 44.004 mm (1.7322 – 1.7324 in)	D (Green)	C (Brown)	B (Black)
	3	43.992 – 43.998 mm (1.7320 – 1.7322 in)	C (Brown)	B (Black)	A (Blue)

NOTICE

After selecting new bearings, recheck the clearance with a plastigauge. Incorrect clearance can cause severe engine damage.

BEARING INSTALLATION

Clean the main journal bearing outer surfaces and crankcase bearing inserts.

Install the main journal bearings [1].

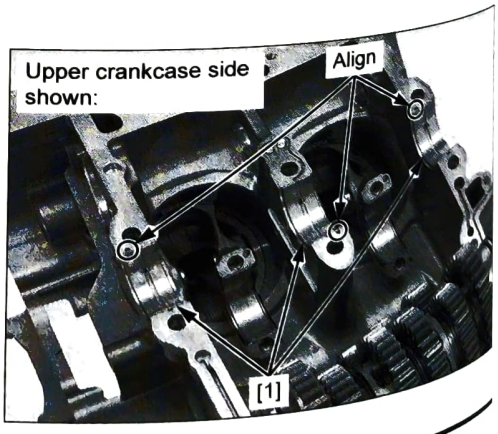

NOTE:

- Install the main journal bearing by aligning each tab with each groove.

CRANKPIN BEARING

NOTICE

Do not interchange the crankpin bearings. They must be installed in their original locations or the correct bearing oil clearance may not be obtained, resulting in severe engine damage.

Remove the crankshaft (page 15-4).

BEARING INSPECTION

Check the crankpin bearings [1] for unusual wear or peeling.

Check the crankpin bearing tabs for damage.

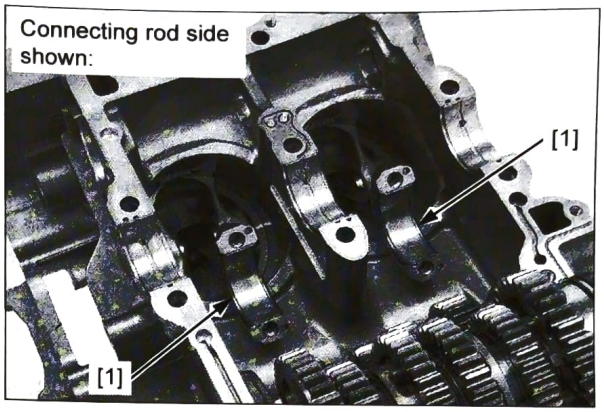

OIL CLEARANCE INSPECTION

NOTE:

- Do not rotate the crankshaft during inspection.

Clean off any oil from the crankpin bearings and crankpins.

Carefully install the crankshaft [1] onto the upper crankcase.

Set the connecting rods onto the crankpins.

Lay a strip of plastigauge [2] lengthwise on each crankpin and be sure to avoid the oil holes.

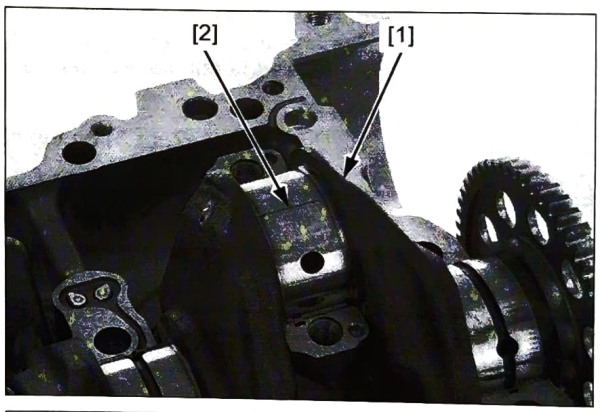

Install the crankpin bearing caps [1].

NOTE:

- Align the I.D. code number on the crankpin bearing caps and connecting rods.

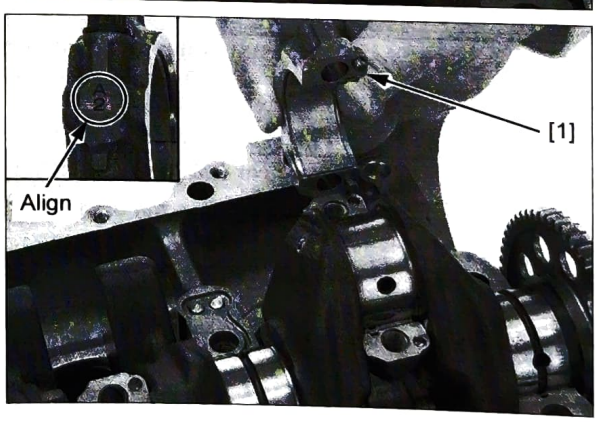

Apply engine oil to the crankpin bearing cap bolt (reuse) threads and seating surfaces.

Install and tighten the crankpin bearing cap bolts [1] to the specified torque in 2 or 3 steps alternately.
Then tighten the bolts 90°.

TORQUE: 22 N·m (2.2 kgf·m, 16 lbf·ft) + 90°

Remove the crankpin bearing cap bolts and crankpin bearing caps [2].

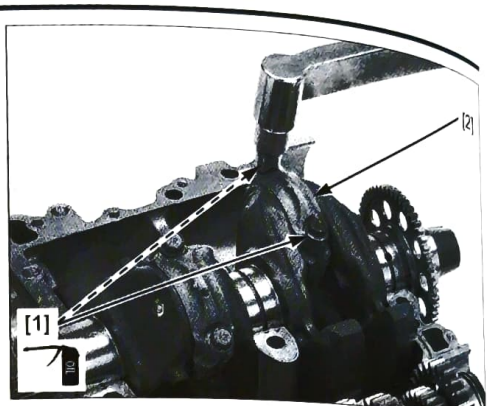

Measure the compressed plastigauge at its widest point on each crankpin to determine the oil clearance.

SERVICE LIMIT: 0.065 mm (0.0026 in)

If the oil clearance exceeds the service limit, select the correct replacement bearings (page 15-10).

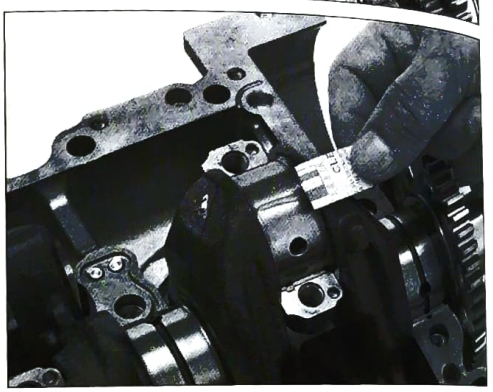

BEARING SELECTION

Record the connecting rod I.D. code number [1] or measure the connecting rod I.D.

NOTE:

- Numbers (1, 2, or 3) on the connecting rods are the connecting rod I.D. codes.
- When measure the connecting rod I.D., install the crankpin bearing cap without installing the crankpin bearing.

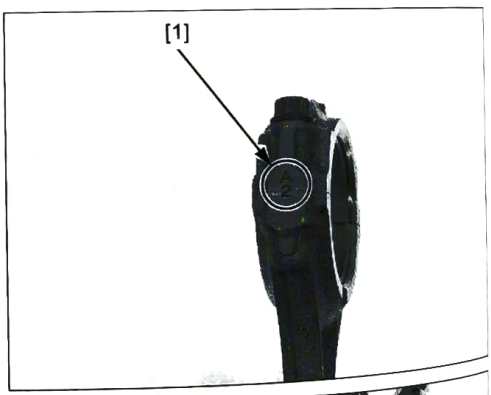

If you are replacing the crankshaft, record the corresponding crankpin O.D. code letter [1].

NOTE:

- Letters (A, B, or C) on the crank weight are the crankpin O.D. codes from left to right.

If you are reusing the crankshaft, measure the crankpin O.D. with a micrometer.

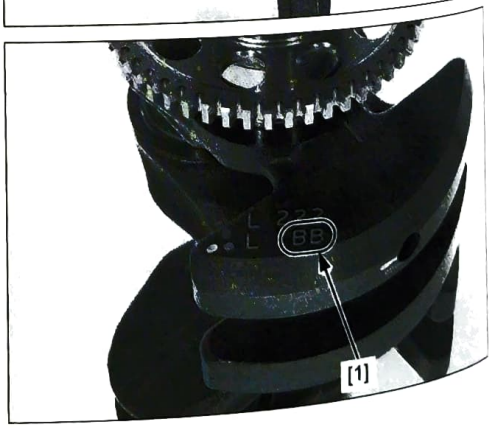

Determine the replacement bearing color code [1] with the connecting rod I.D. code number or the measured connecting rod I.D., and the crankpin O.D. code letter or measured crankpin O.D.

Refer to the crankpin bearing selection table below for bearing selection.

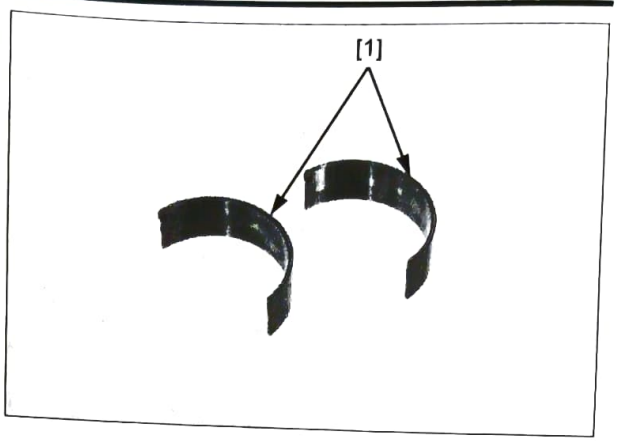

CRANKPIN BEARING THICKNESS:

A: Blue: Thickest
B: Black:
C: Brown:
D: Green:
E: Yellow: Thinnest

CRANKPIN BEARING SELECTION TABLE:

			CONNECTING ROD I.D. CODE		
			1	2	3
			47.000 – 47.006 mm (1.8504 – 1.8506 in)	47.006 – 47.012 mm (1.8506 – 1.8509 in)	47.012 – 47.018 mm (1.8509 – 1.8511 in)
CRANKPIN O.D. CODE	A	43.992 – 43.998 mm (1.7320 – 1.7322 in)	E (Yellow)	D (Green)	C (Brown)
	B	43.986 – 43.992 mm (1.7317 – 1.7320 in)	D (Green)	C (Brown)	B (Black)
	C	43.980 – 43.986 mm (1.7315 – 1.7317 in)	C (Brown)	B (Black)	A (Blue)

NOTICE

After selecting new bearings, recheck the clearance with a plastigauge. Incorrect clearance can cause severe engine damage.

BEARING INSTALLATION

Clean the crankpin bearing outer surfaces, crankpin bearing cap and connecting rod.

Install the crankpin bearings [1] onto the crankpin bearing cap and connecting rod.

NOTE:

- Install the crankpin bearings by aligning each tab with each groove.

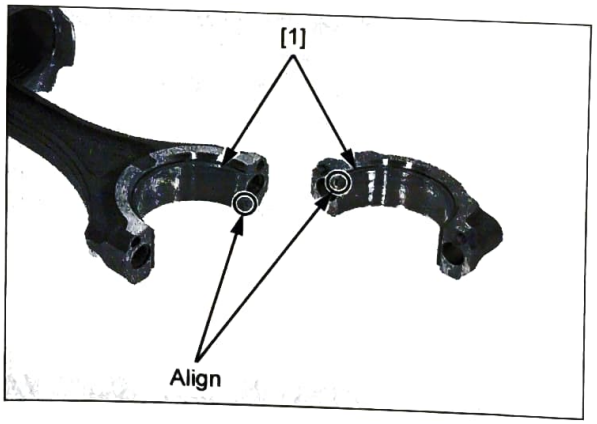

PISTON/CYLINDER

PISTON/CONNECTING ROD REMOVAL

NOTICE

- *Before piston removal, place a clean shop towel around the connecting rod to prevent damaging the cylinder inner surface.*
- *Do not try to remove the piston/connecting rod assembly from bottom of the cylinder; the assembly will get stuck in the gap between the cylinder sleeve and the upper crankcase.*
- *Do not interchange the crankpin bearing. They must be installed in their original locations or the correct bearing oil clearance may not be obtained resulting in severe engine damage.*

Remove the following:

– Transmission (page 14-14)
– Crankshaft (page 15-4)

Remove the piston/connecting rod assembly [1] from the top of the cylinder.

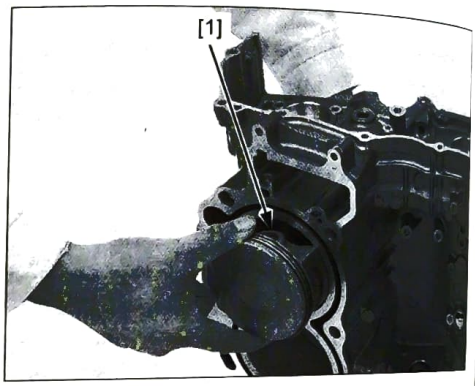

PISTON REMOVAL

Remove the piston pin clips [1].

Push the piston pin [2] out of the piston [3] and connecting rod [4].

Remove the piston.

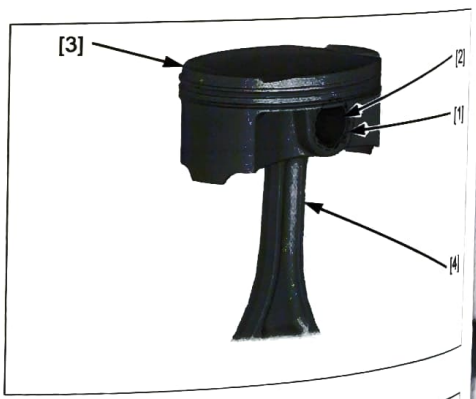

PISTON RING REMOVAL

Spread each piston ring ends and remove them by lifting up at a point opposite the gap.

NOTE:

- Be careful not to damage the piston ring by spreading the ends too far.

Clean carbon deposits from the piston ring grooves with a ring that will be discarded.

NOTE:

- Never use a wire brush; it will scratch the groove.

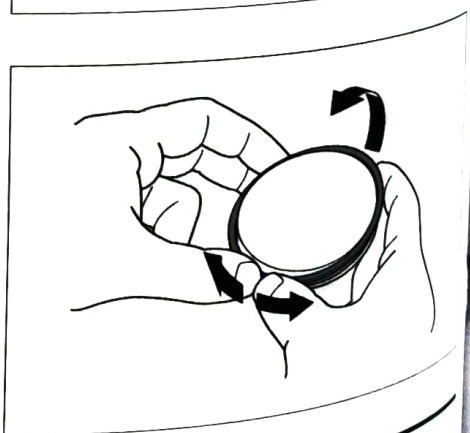

INSPECTION

Inspect the following parts for scratches, damage, abnormal wear, or deformation.

- Cylinder
- Piston
- Piston rings
- Piston pin
- Connecting rod small end

Measure each part and calculate the clearance according to CRANKSHAFT/PISTON/CYLINDER SPECIFICATIONS (page 1-8).

Replace any part if it is out of service limit.

PISTON RING INSTALLATION

Clean the piston ring grooves thoroughly.

Install the piston rings.

NOTE:

- Apply engine oil to the piston ring surfaces entirely and piston ring grooves.
- Avoid piston and piston ring damage during installation.
- Install the top ring [1] and second ring [2] with their marks [3] facing up.
  Install the top ring and second ring in the correct position as shown.
- To install the oil ring [4], install the spacer [5] first, then install the side rails [6].

After installation, the rings should rotate freely in the ring groove.

Stagger the piston ring end gaps 120° apart from each other.
Stagger the side rail end gaps as shown.

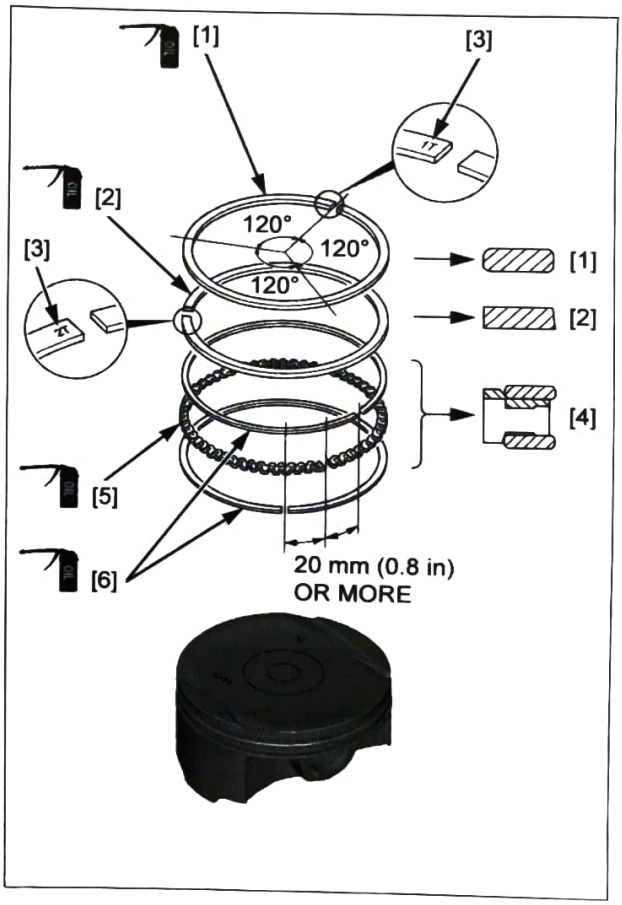

PISTON INSTALLATION

Apply engine oil to the piston pin hole inner surface.

Apply molybdenum oil solution to the connecting rod small end inner surface.

Assemble the piston [1] and connecting rod [2] with the connecting rod "MKS" mark [3] facing to the piston "MKS" mark [4] side.

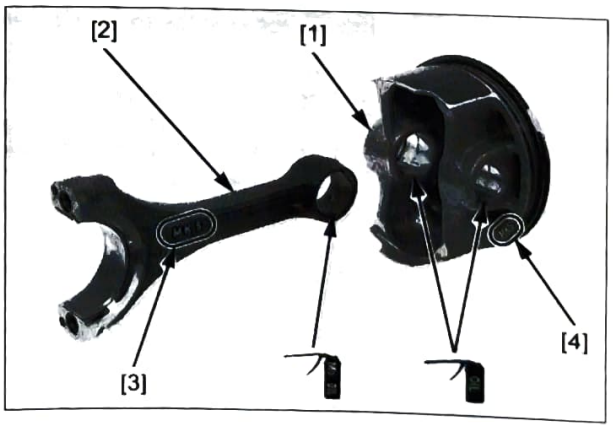

Apply molybdenum oil solution to the piston pin outer surface.

Install the piston pin [1].

Secure the piston pin using new piston pin clips [2].

NOTE:
- Make sure that the piston pin clips are seated securely.
- Do not align the piston pin clip end gap with the piston cut-out [3] as shown.

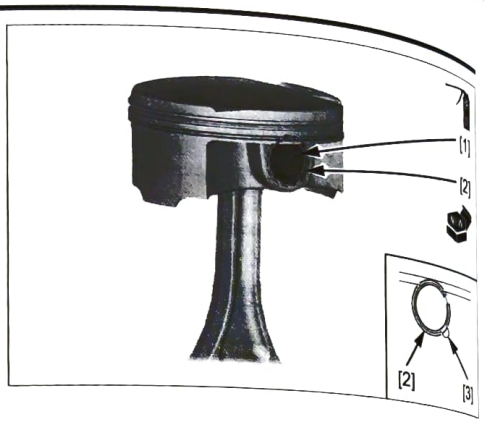

PISTON/CONNECTING ROD INSTALLATION

Apply engine oil to the piston and cylinder inner surface.

Install the piston/connecting rod assemblies [1] into the cylinders using a commercially available piston ring compressor tool [2].

NOTICE

- *While installing the piston, be careful not to damage the top surface of the cylinder, especially around the cylinder bore.*
- *Be careful not to damage the cylinder inner surface with the connecting rod.*

NOTE:
- When reusing the connecting rods, they must be installed in their original locations.
- Install the piston/connecting rod assembly with the "IN" mark [3] facing the intake side.
- Make sure the piston ring compressor tool sits flush on the top surface of the cylinder.

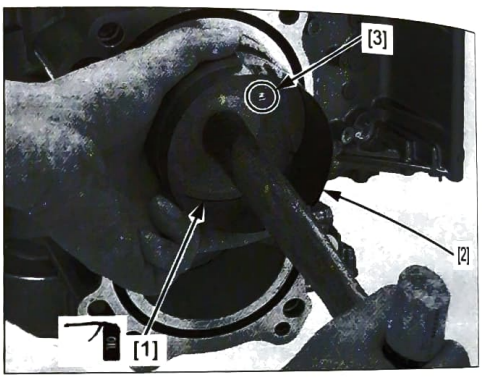

Use the handle of a plastic hammer or equivalent tool to tap the piston into the cylinder.

Install the following:

– Crankshaft (page 15-5)
– Transmission (page 14-24)

PISTON OIL JET REMOVAL/INSTALLATION

Separate the crankcase halves (page 14-12).

Remove the piston oil jets [1] and O-rings [2].

Installation is in the reverse order of removal.

NOTE:
- Replace the O-rings with new ones.
- Apply engine oil to new O-rings.
- Install the piston oil jets into the holes of upper crankcase as shown.

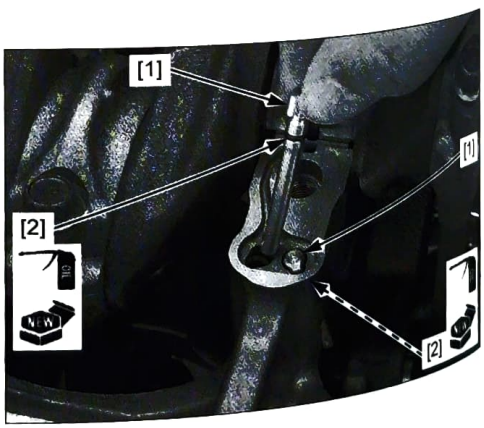

16. ENGINE REMOVAL/INSTALLATION

SERVICE INFORMATION 16-2

COMPONENT LOCATION 16-3

ENGINE REMOVAL 16-4

ENGINE INSTALLATION 16-9

SERVICE INFORMATION

GENERAL

- A hoist or equivalent is required to support the motorcycle when removing and installing the engine.
- When removing/installing the engine, tape the frame around the engine beforehand for frame protection.
- When installing the engine, be sure to tighten the engine mounting fasteners to the specified torque in the specified sequence. If you mistake the torque or sequence, loosen all mounting fasteners, then tighten them again to the specified torque in the correct sequence.
- MT type:
  The following components can be serviced with the engine installed in the frame.
  – Starter motor (page 6-7)
  – Throttle body (page 7-11)
  – Water pump (page 8-10)
  – Oil pump (page 9-6)
  – Rocker arm (page 10-7)
  – Camshaft (page 10-11)
  – Cylinder head/valves (page 10-17)
  – Flywheel (page 11-6)
  – Stator (page 11-6)
  – Clutch (page 12-9)
  – Primary drive gear (page 12-18)
  – Gearshift linkage (page 12-20)
  – Balancer (page 14-7)
- DCT type:
  The following components can be serviced with the engine installed in the frame.
  – Starter motor (page 6-7)
  – Throttle body (page 7-11)
  – Water pump (page 8-10)
  – Oil pump (page 9-6)
  – Rocker arm (page 10-7)
  – Camshaft (page 10-11)
  – Cylinder head/valves (page 10-17)
  – Flywheel (page 11-6)
  – Stator (page 11-6)
  – Balancer (page 14-7)
  – Shift control motor/reduction gears (page 13-52)
  – Primary drive gear (page 13-51)
  – Dual clutch (page 13-48)
  – Gearshift linkage (page 13-55)
- The following components require engine removal for service.
  – Transmission (page 14-14)
  – Crankshaft (page 15-4)
  – Piston/cylinder (page 15-12)

COMPONENT LOCATION

DCT type shown:

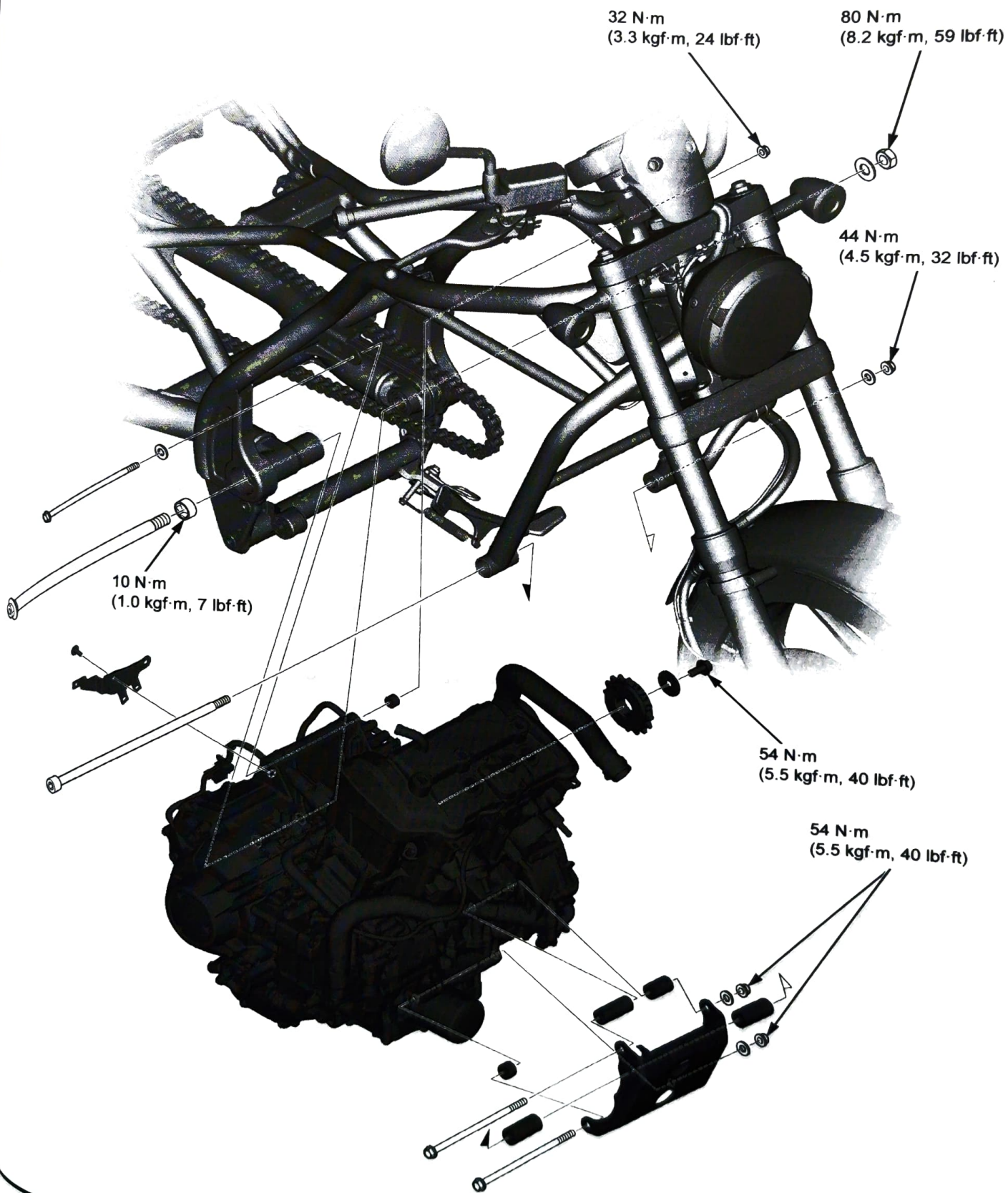

ENGINE REMOVAL

Support the motorcycle using a safety stand or hoist.

MT type:
- Remove the following:
  - Horn (page 22-25)
  - Exhaust pipe (page 2-17)
  - ABS modulator assembly (page 20-25)
  - Radiator reserve tank (page 8-10)
  - Gearshift spindle cover (page 12-20)
  - Thermostat (page 8-6)
  - Swingarm (page 18-8)

DCT type:
- Remove the following:
  - Horn (page 22-25)
  - Exhaust pipe (page 2-17)
  - ABS modulator assembly (page 20-25)
  - Radiator reserve tank (page 8-10)
  - Shift control motor cover (page 13-52)
  - Thermostat (page 8-6)
  - Swingarm (page 18-8)

Support the main step bracket so it does not hang from the brake hose. Do not twist the brake hose.

Remove the bracket bolts [1] and the right main step bracket [2] from frame.

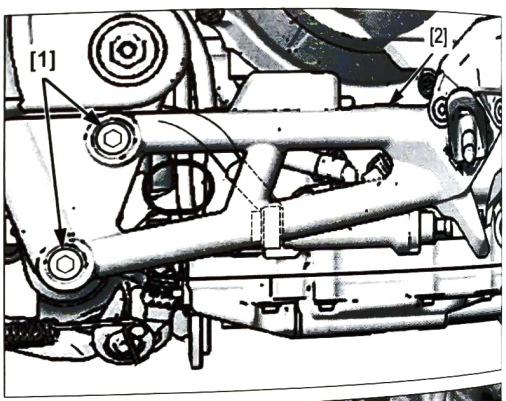

MT type:

Release the rubber cap [1] from the EOP switch [2].

Remove the terminal screw [3] and disconnect the EOP switch terminal [4].

Release the wire clips [5].

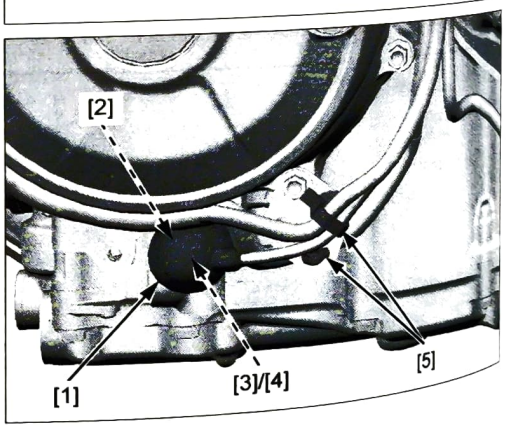

DCT type: Disconnect the CKP sensor 3P (Black) connector [1] and the EOP sensor 3P (Black) connector [2].

Release the wire clips [3].

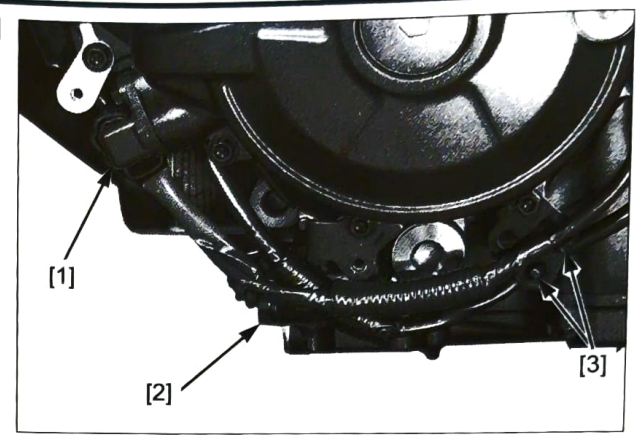

Disconnect the sidestand switch 2P (Black) connector [1].

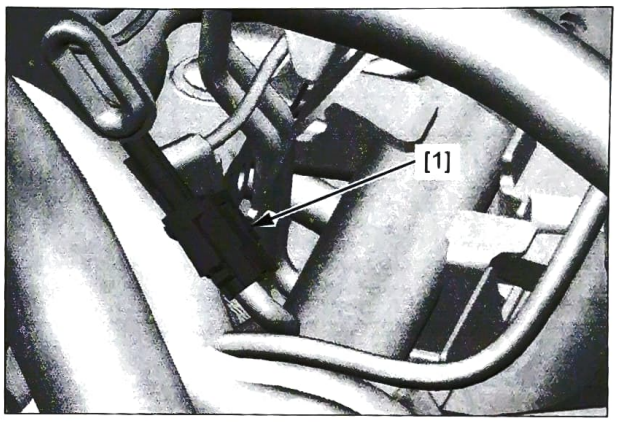

MT type: Release the rubber cap [1] from the neutral switch [2].

Disconnect the following:

- Neutral switch terminal [3]
- GP sensor 3P (Black) connector [4]

Remove the following:

- Socket bolt [5]
- Harness clip stay [6]

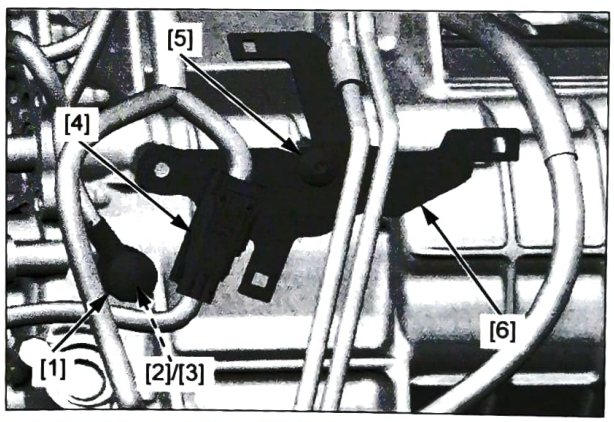

DCT type: Release the rubber cap [1] from the neutral switch [2].

Disconnect the following:

- Neutral switch terminal [3]
- TR sensor 3P (Black) connector [4]
- Inner mainshaft sensor 3P (Black) connector [5]
- Shift spindle angle sensor 3P (Blue) connector [6]

Remove the following:

- Socket bolt [7]
- Harness clip stay [8]

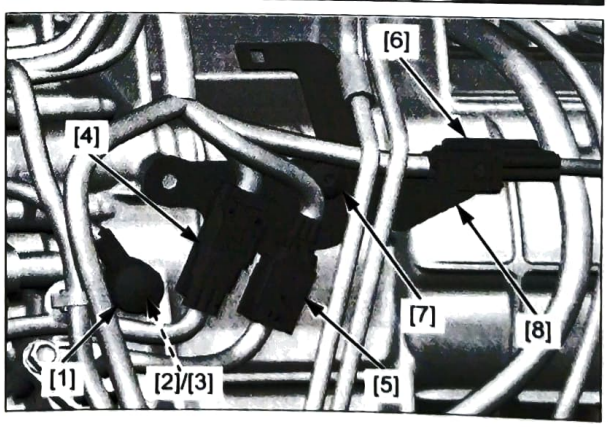

Release the boots [1].

Remove the starter motor cable terminal nut/washer [2] and disconnect the starter motor terminal [3].

Remove the bolt [4] and disconnect the battery (–) negative cable [5].

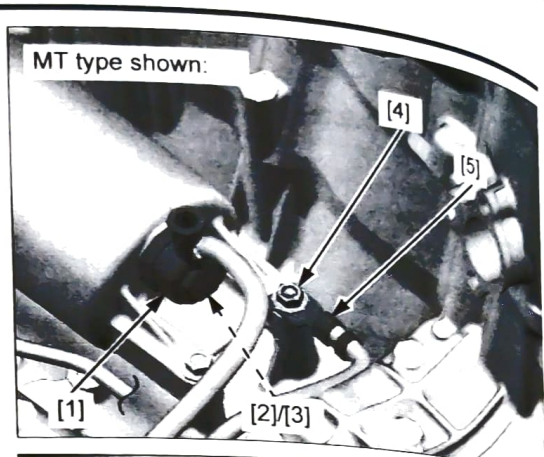

Disconnect the ECT sensor 2P (Black) connector [1].

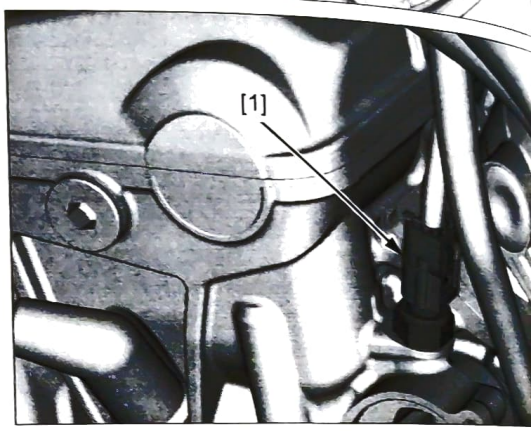

DCT type: Disconnect the shift control motor 2P (Black) connector [1].

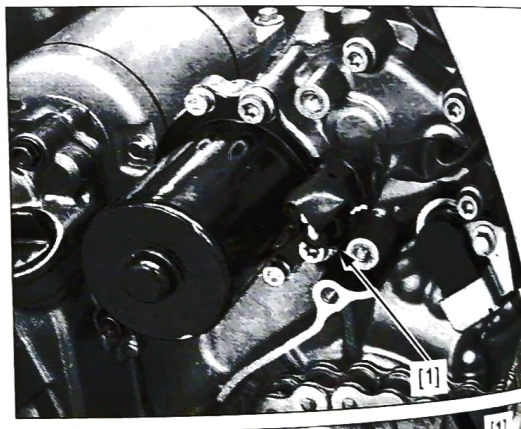

MT type: Remove the bolt [1] and clutch cable holder [2].

Disconnect the clutch cable [3] from the clutch lifter lever [4].

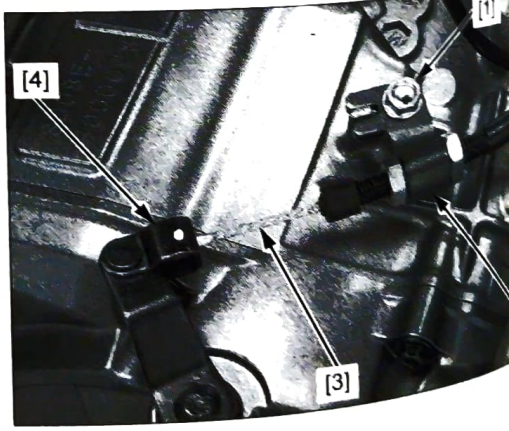

DCT type: Remove the wire clamp [1].

Disconnect the following:

- No.1 clutch EOP sensor 3P (Gray) connector [2]
- No.2 clutch EOP sensor 3P (Black) connector [3]
- Clutch line EOP sensor 3P (Gray) connector [4]

Remove the wire clip [5] from the stay [6].

Remove the bolt [7] and the stay.

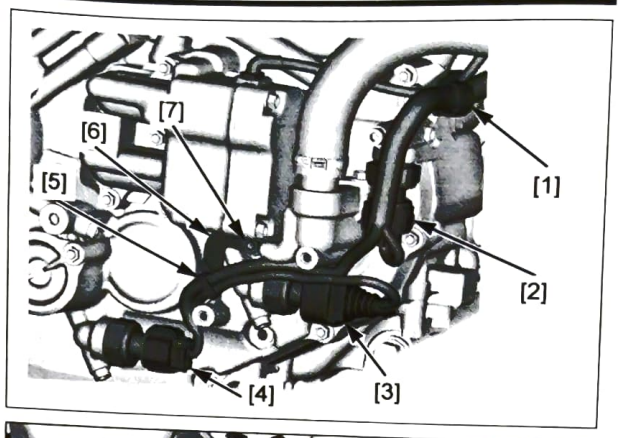

DCT type: Disconnect the EOT sensor 2P (Black) connector [1].

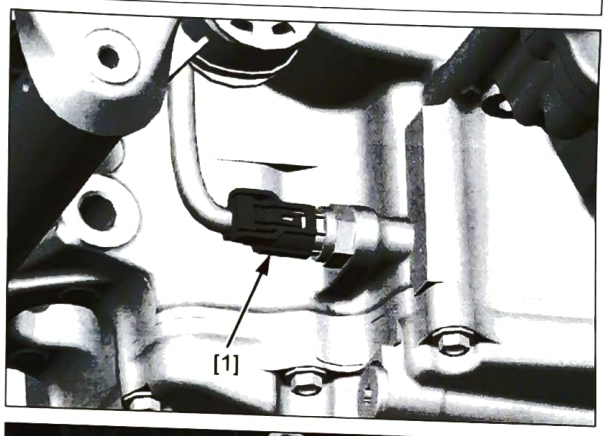

Fully slacken the drive chain (page 3-17).

Remove the drive sprocket bolt [1] and washer [2].

Remove the drive sprocket [3] from the countershaft and drive chain.

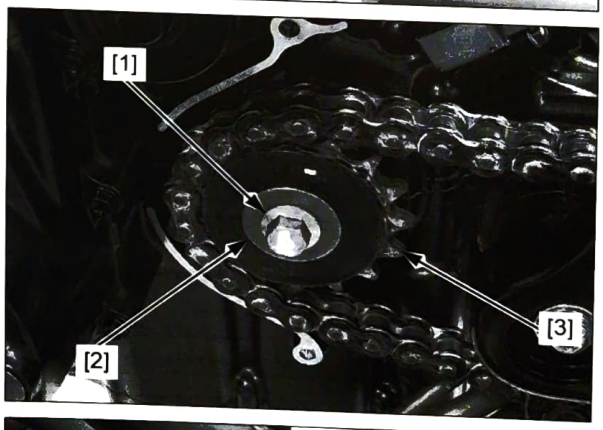

Support the engine using a jack or other adjustable support.

Remove the following:

- Rear upper engine hanger nut [1]
- Collar [2]
- Rear upper engine hanger bolt [3]
- Washer [4]

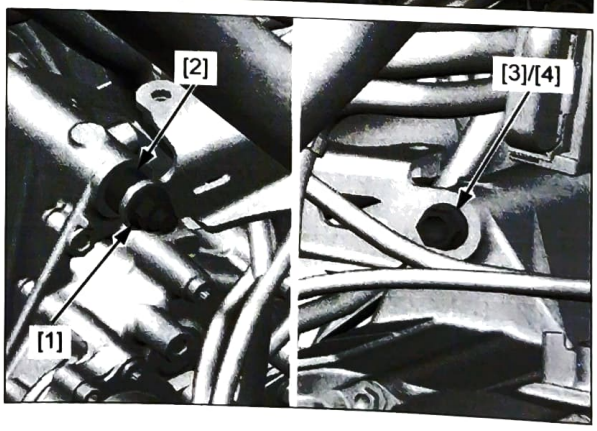

Remove the following:

- Front engine hanger nuts [1]
- Two washers [2]
- Front engine hanger bolts [3] and socket bolt [4]
- Five collars [5]

Carefully maneuver the engine and remove it out of the frame to the right.

NOTE:

- During engine removal, hold the engine securely and be careful not to damage the frame and engine.
- Note the direction of the bolts.
- Mark and store all the bolts, nuts, and collars to ensure that they are reinstalled in their original locations.

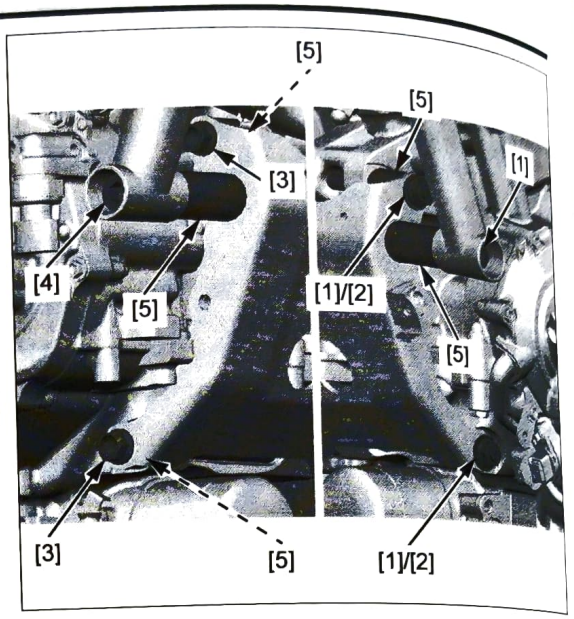

ENGINE INSTALLATION

Place the jack or other adjustable support under the engine.

NOTE:

- During engine installation, hold the engine securely and be careful not to damage the frame and engine.
- Carefully align the mounting points with the jack to prevent damage to the engine, frame, water hoses, brake pipes, wires, and cables.

Apply engine oil to the swingarm pivot nut threads and seating surface.

Loosely install the following into the correct position.

- Swingarm pivot adjust bolt [1], pivot bolt[2], washer [3], and nut [4]
- Rear upper bolt [5], washer [6], collar [7], and nut [8]
- Front engine hanger upper bracket bolt [9], engine hanger bracket [10], collars [11], washer [12], and nut [13]
- Front engine hanger lower bracket bolt [14], collar [15], washer [16], and nut [17]
- Front engine hanger socket bolt [18], collars [19], washer [20], and nut [21]

NOTE:

- The jack height must be continually adjusted to relieve stress for ease of bolt installation.

Route the hoses, wires, and cables properly (page 1-27).

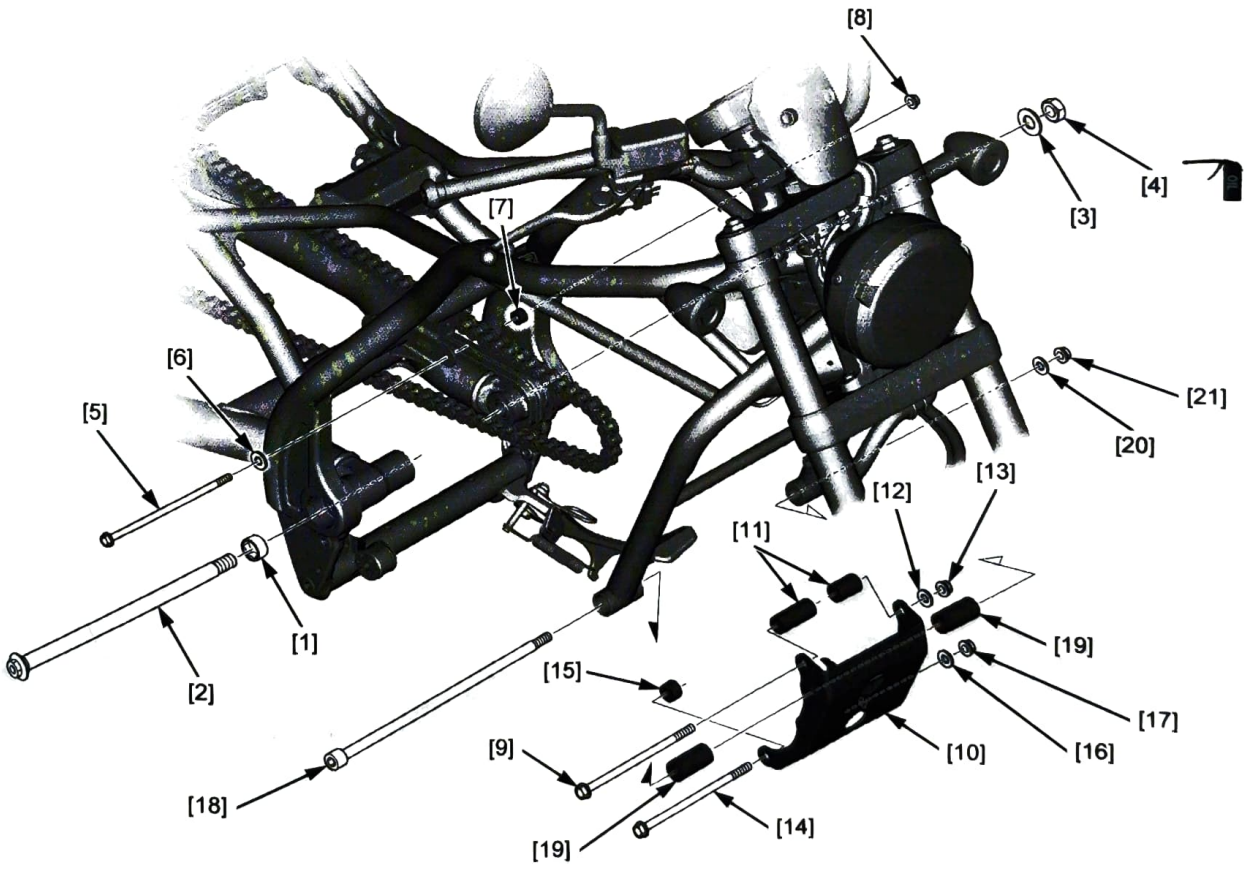

Tighten the front engine hanger bracket nuts [1] to the specified torque.

TORQUE: 54 N·m (5.5 kgf·m, 40 lbf·ft)

Tighten the swingarm pivot adjust bolt and nut to the specified torque (page 18-8).

TORQUE:
Swingarm pivot adjust bolt:
10 N·m (1.0 kgf·m, 7 lbf·ft)
Swingarm pivot nut:
80 N·m (8.2 kgf·m, 59 lbf·ft)

Tighten the rear upper engine hanger nut [2] to the specified torque.

TORQUE: 32 N·m (3.3 kgf·m, 24 lbf·ft)

Tighten the front engine hanger nut [3] to the specified torque.

TORQUE: 44 N·m (4.5 kgf·m, 32 lbf·ft)

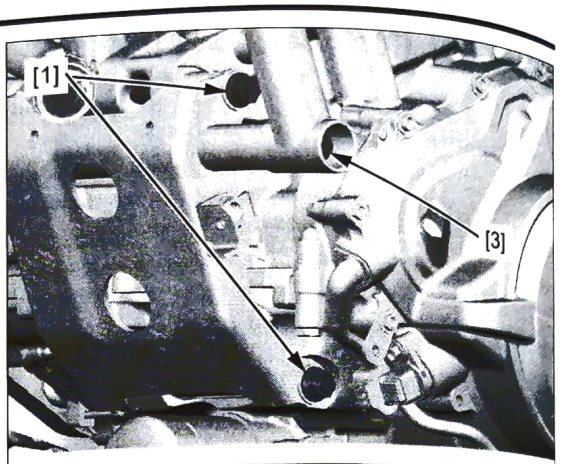

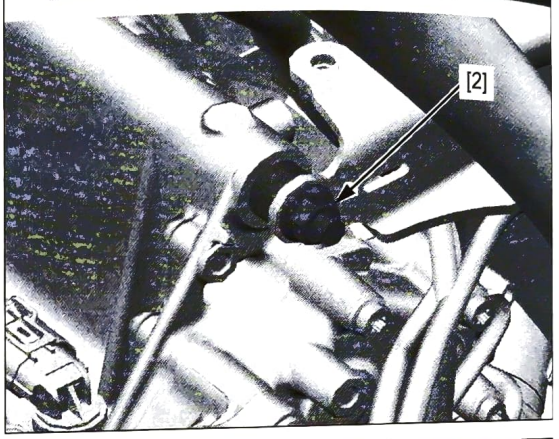

Install the drive sprocket [1] in the drive chain.

NOTE:
- Install the drive sprocket with the mark [2] side facing out.

Install the drive sprocket onto the countershaft.

Install the washer [3] and drive sprocket bolt [4].

Tighten the drive sprocket bolt to the specified torque.

TORQUE: 54 N·m (5.5 kgf·m, 40 lbf·ft)

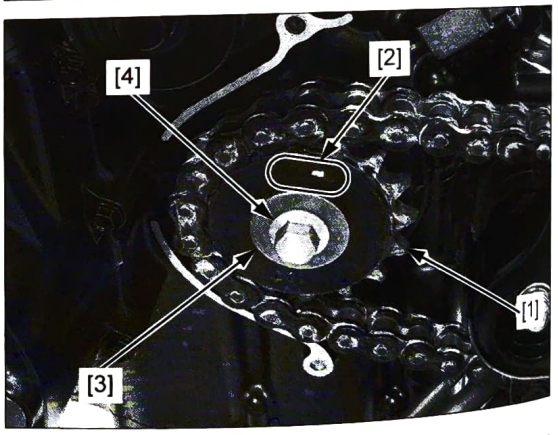

DCT type: Connect the EOT sensor 2P (Black) connector [1].

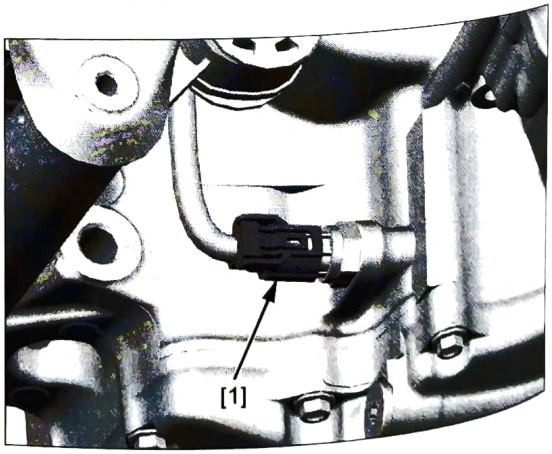

DCT type: Connect the following:

- Clutch line EOP sensor 3P (Gray) connector [1]
- No.1 clutch EOP sensor 3P (Gray) connector [2]
- No.2 clutch EOP sensor 3P (Black) connector [3]

Install the stay [4] and the clutch EOP sensor wire stay bolt [5].
Tighten the clutch EOP sensor wire stay bolt to the specified torque.

TORQUE: 12 N·m (1.2 kgf·m, 9 lbf·ft)

Install the wire clip [6] and wire clamp [7].

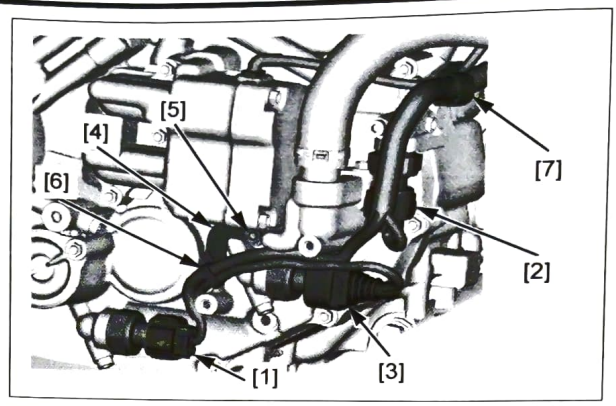

MT type: Connect the clutch cable [1] to the clutch lifter arm [2].

Install the clutch cable holder [3] and bolt [4].

NOTE:

- Align the clutch cable holder slit with the frame tab.

Tighten the clutch cable lock nut to the specified torque.

TORQUE:
Clutch cable lock nut:
8.5 N·m (0.9 kgf·m, 6.3 lbf·ft)

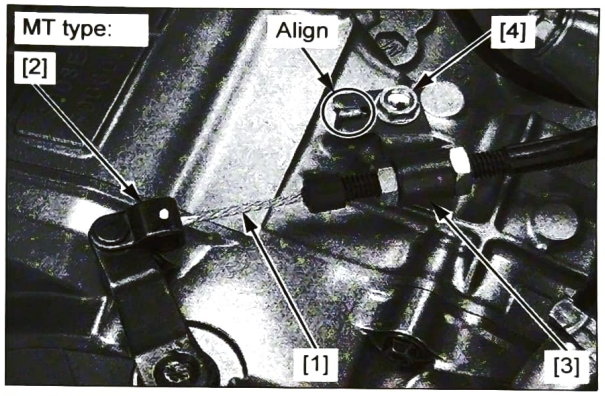

DCT type: Connect the shift control motor 2P (Black) connector [1].

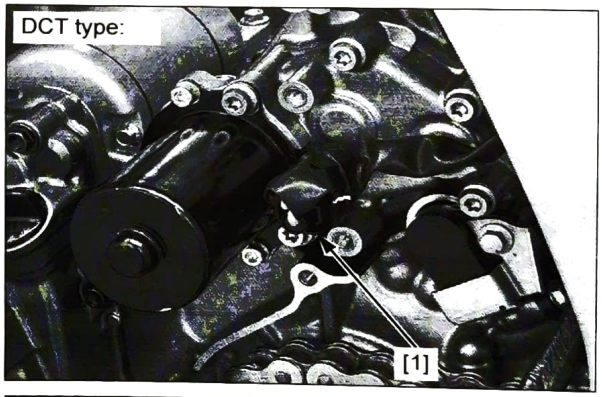

Connect the ECT sensor 2P (Black) connector [1].

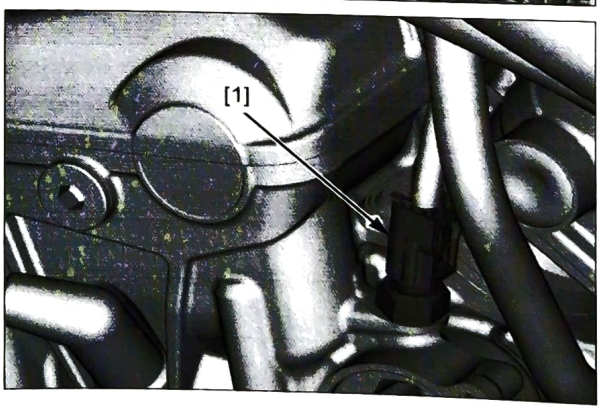

Connect the starter motor terminal [1] and install the starter motor cable terminal washer/nut [2].

Install the boots [3].

Connect the battery negative (–) cable [5] and install the bolt [4].

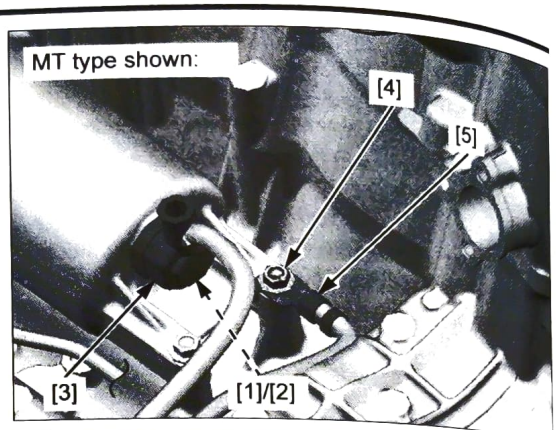

MT type: Install the following:

- Harness clip stay [1]
- Socket bolt [2]

Connect the following:

- Neutral switch terminal [3]
- GP sensor 3P (Black) connector [4]

Install the rubber cap [5].

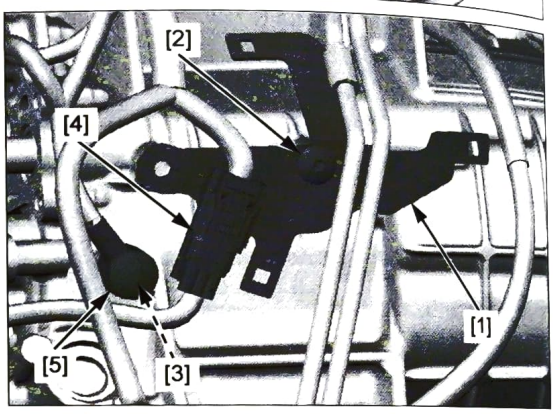

DCT type: Install the following:

- Harness clip stay [1]
- Socket bolt [2]

Connect the following:

- Neutral switch terminal [3]
- TR sensor 3P (Black) connector [4]
- Inner mainshaft sensor 3P (Black) connector [5]
- Shift spindle angle sensor 3P (Blue) connector [6]

Install the rubber cap [7].

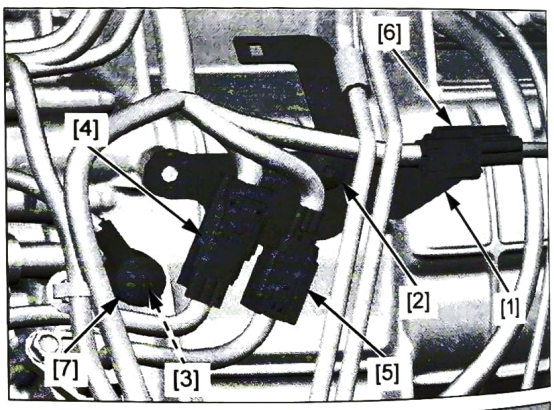

Connect the sidestand switch 2P (Black) connector [1].

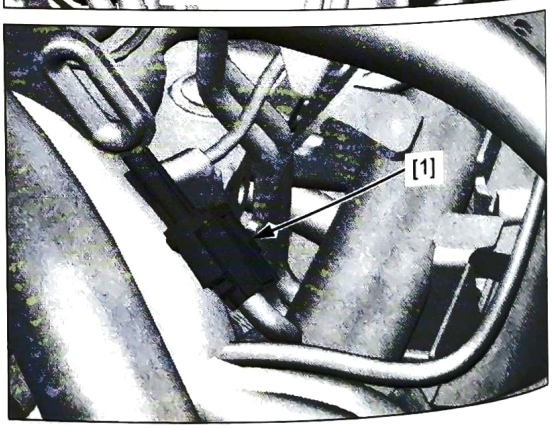

MT type: Install the wire clips [1].

Connect the EOP switch terminal [2] and Install the terminal screw [3].

Install the rubber cap [4].

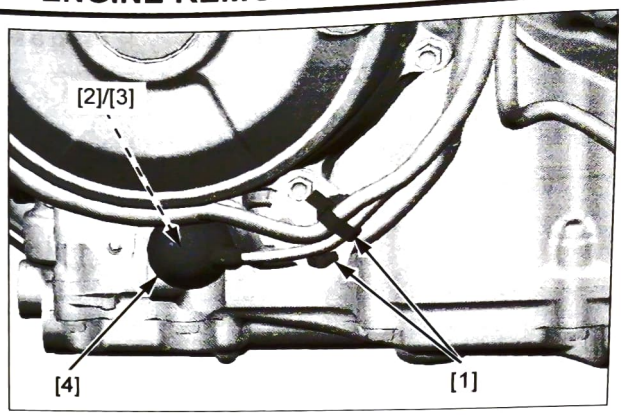

DCT type: Install the wire clips [1].

Connect the CKP sensor 3P (Black) connector [2] and the EOP sensor 3P (Black) connector [3].

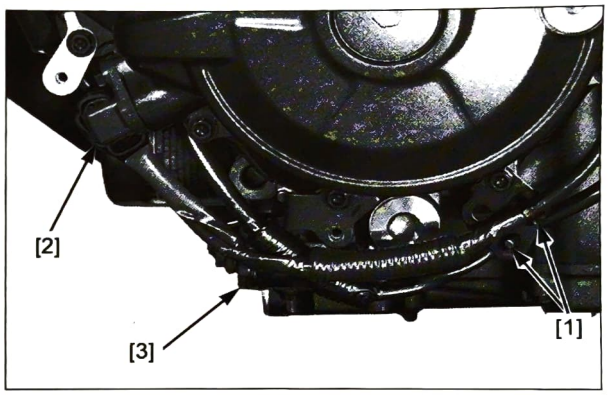

Install the right main step bracket [1] and bracket bolts [2].
Tighten the bracket bolts to the specified torque.

TORQUE: 37 N·m (3.8 kgf·m, 27 lbf·ft)

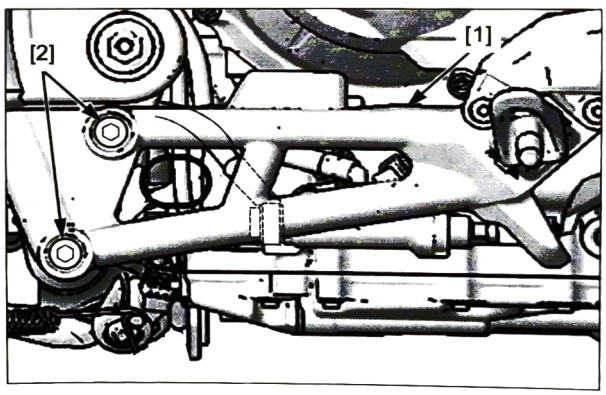

Support the motorcycle using a safety stand or hoist.

Install the following:

- MT type:
  - Radiator reserve tank (page 8-10)
  - Battery case (page 2-12)
  - Muffler/exhaust pipe (page 2-17)
  - Radiator (page 8-7)
  - CKP sensor (page 4-65)
  - Gearshift spindle cover (page 12-20)
  - Shift pedal (page 12-23)
  - Right rear engine cover (page 2-10)
  - Heel guards (page 2-10)
- DCT type:
  - Radiator reserve tank (page 8-10)
  - Battery case (page 2-12)
  - Muffler/exhaust pipe (page 2-17)
  - Radiator (page 8-7)
  - CKP sensor (page 4-65)
  - Shift control motor cover (page 13-52)
  - Clutch EOP sensor cover (page 2-10)
  - Heel guards (page 2-10)

Adjust the drive chain slack (page 3-17).

17. FRONT WHEEL/SUSPENSION/STEERING

SERVICE INFORMATION 17-2

TROUBLESHOOTING 17-4

COMPONENT LOCATION 17-5

HANDLEBAR 17-6

FRONT WHEEL 17-14

FORK 17-18

STEERING STEM 17-28

SERVICE INFORMATION

GENERAL

- A hoist or equivalent is required to support the motorcycle when servicing the front wheel, fork and steering stem.
- A contaminated brake disc or pad reduces stopping power. Discard contaminated pads and clean a contaminated disc with a high quality brake degreasing agent.
- Do not operate the brake lever after removing the front wheel.
- Use only tires marked "TUBELESS" and tubeless valves on rim marked "FOR TUBELESS".
- After the front wheel installation, check the brake operation by applying the brake lever.
- For brake system service (page 19-2).

TOOLS

Bearing remover head, 20 mm 07746-0050600 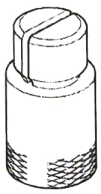	Bearing remover shaft 07746-0050100 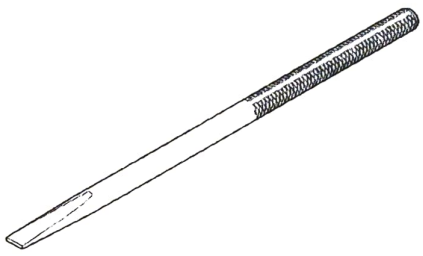	Driver 07749-0010000 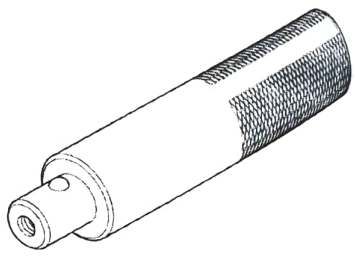
Attachment, 41.5 x 46.5 mm 07945-3330100 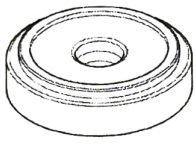	Attachment, 42 x 47 mm 07746-0010300 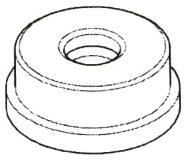	Attachment, 52 x 55 mm 07746-0010400 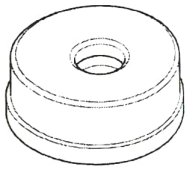
Pilot, 20 mm 07746-0040500 	Fork seal driver attachment, 43 mm 07947-KA40200 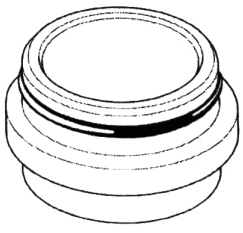	Fork seal driver 07947-KA50100 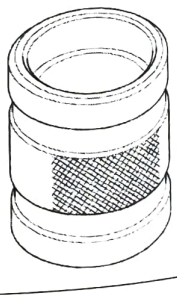

Steering stem socket 07916-3710101 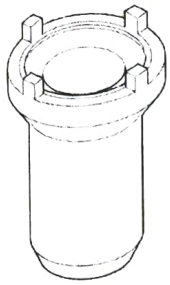	Ball race remover set 07953-MJ10000 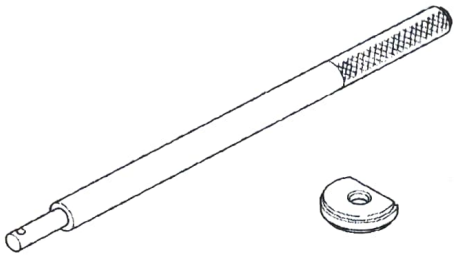 or 07953-MJ1000B (U.S.A. only)	Bearing remover 07946-3710500 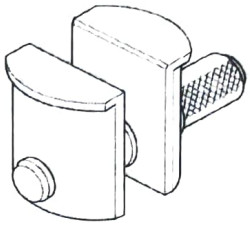
Steering stem driver 07946-MB00000 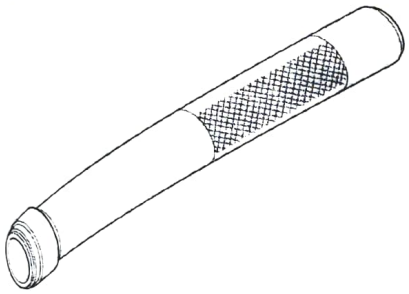	Remover attachment 07953-MJ10100  (not available in U.S.A.)	Remover shaft 07953-MJ10200 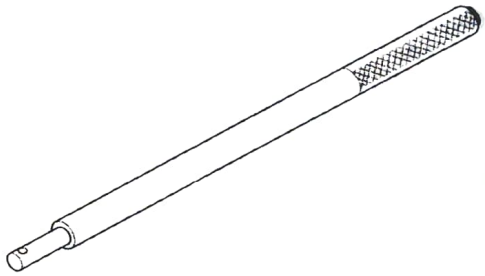 (not available in U.S.A.)

TROUBLESHOOTING

Hard steering
- Insufficient tire pressure
- Faulty tire
- Steering stem adjustment nut too tight
- Worn or damaged steering bearings
- Worn or damaged steering bearing races
- Bent steering stem

Steers to one side or does not track straight
- Bent axle
- Wheel installed incorrectly
- Worn or damaged wheel bearings
- Bent fork leg
- Damaged or loose steering bearings
- Damaged frame
- Faulty wheel bearing

Front wheel wobbles
- Bent rim
- Faulty tire
- Worn or damaged wheel bearings
- Loose axle
- Unbalanced tire and wheel

Wheel hard to turn
- Faulty wheel bearings
- Bent axle
- Brake drag (page 19-2)

Soft suspension
- Low tire pressure
- Weak fork spring
- Low fluid level in fork
- Incorrect fork fluid weight (low viscosity)

Stiff suspension
- High tire pressure
- Bent fork tube
- Fork slider binds
- High fluid level in fork
- Incorrect fork fluid weight (high viscosity)
- Clogged fork fluid passage

Front suspension noise
- Loose fork fasteners
- Incorrect fork fluid weight (low viscosity)
- Worn slider of fork tube bushing

COMPONENT LOCATION

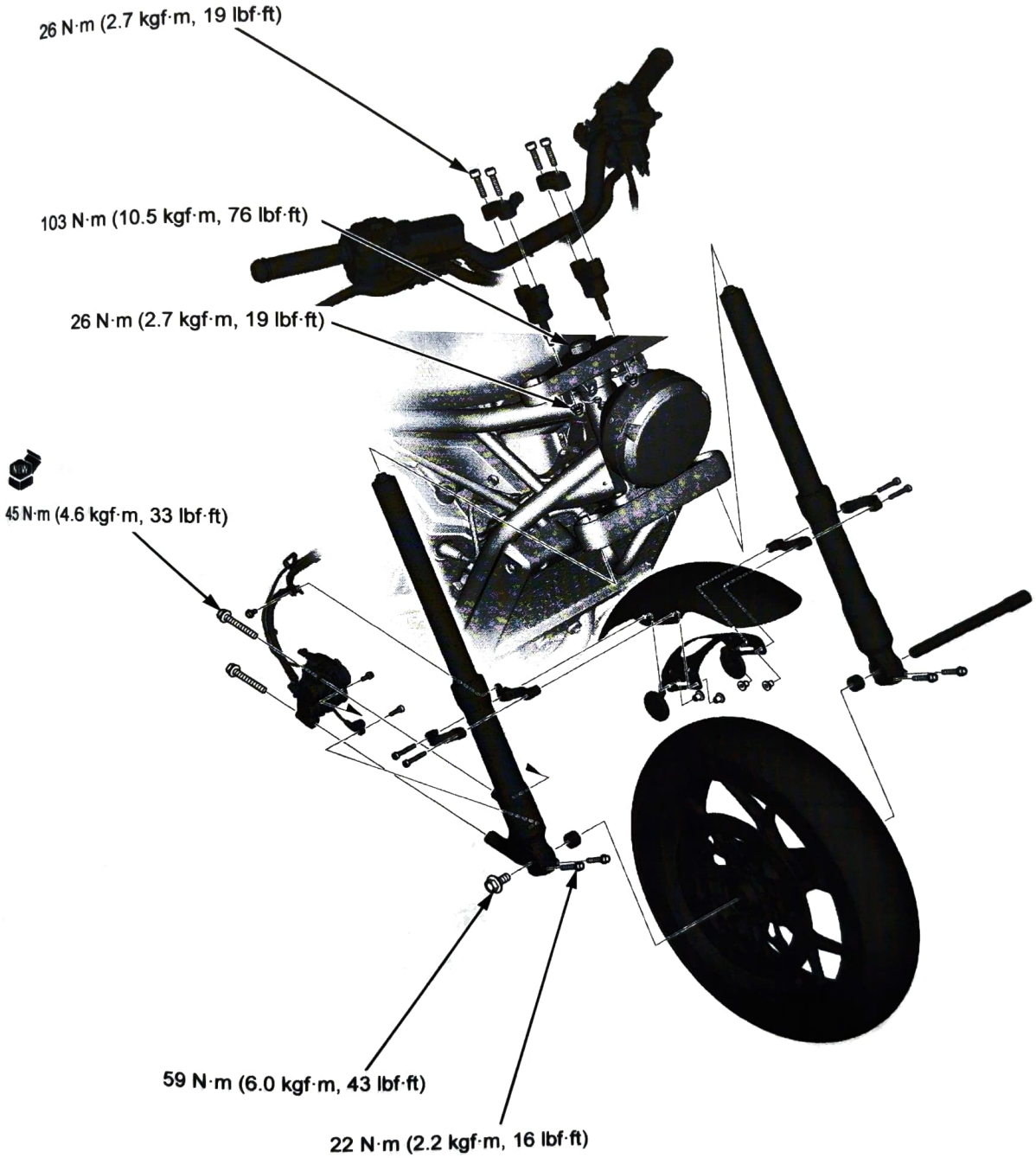

HANDLEBAR

REMOVAL

Remove the following:

- Rearview mirrors (page 2-6)
- Combination meter (page 22-8)

Remove the clamps [1] from the handle bar.

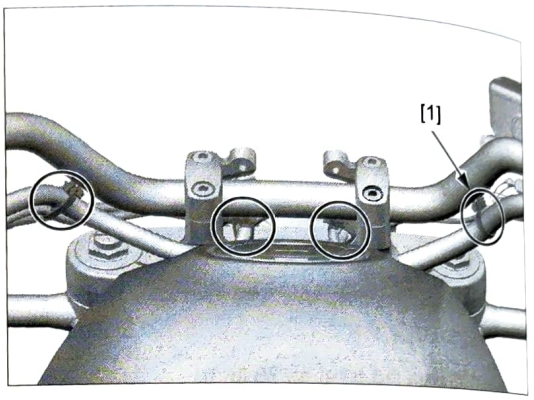

MT type: Remove the following:

- Clutch switch connectors (upper side) [1]
- Cruise cancel switch connectors (lower side) [2]
- Two socket bolts [3]
- Bracket holder [4]
- Clutch lever bracket [5]

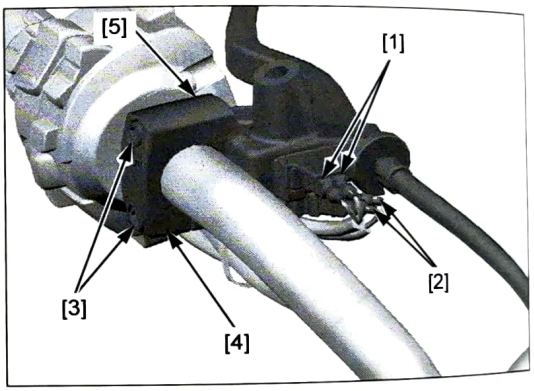

DCT type: Remove the following:

- Parking brake switch connectors [1]
- Two socket bolts [2]
- Parking brake lever assembly [3]

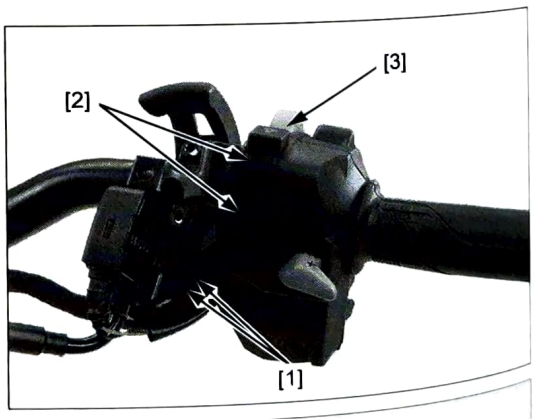

Remove the following:

- Two screws [1]
- Left handlebar switch housing [2]
- Left handlebar grip [3]

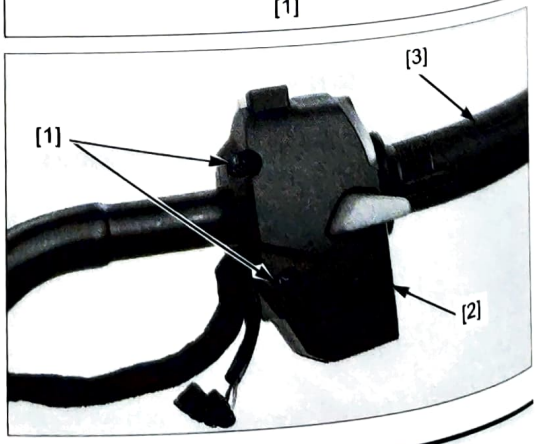

Remove the following:

- Brake light switch connectors (upper side) [1]
- Cruise cancel switch connectors (lower side) [2]

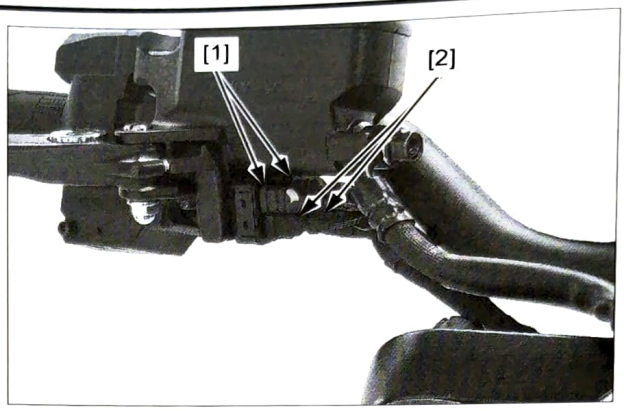

Keep the reservoir upright to prevent air from entering the hydraulic system.

Remove the following:

- Two socket bolts [1]
- Master cylinder holder [2]
- Front master cylinder [3]

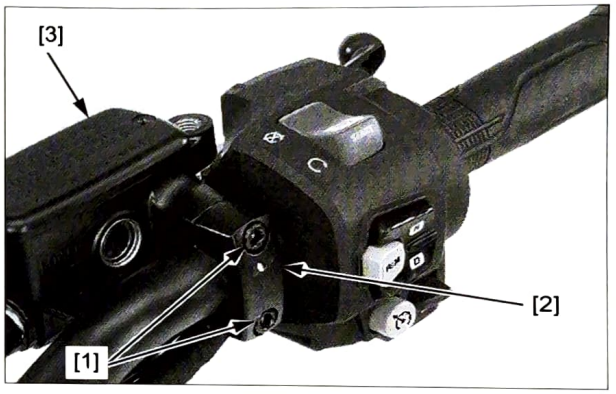

Remove the two screws [1].

Separate the right handlebar switch housing [2].

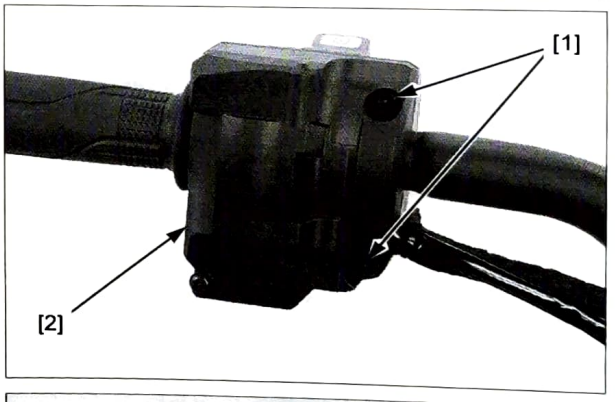

Remove the following:

- Screw [1]
- Right handlebar switch housing [2]
- Throttle grip [3]

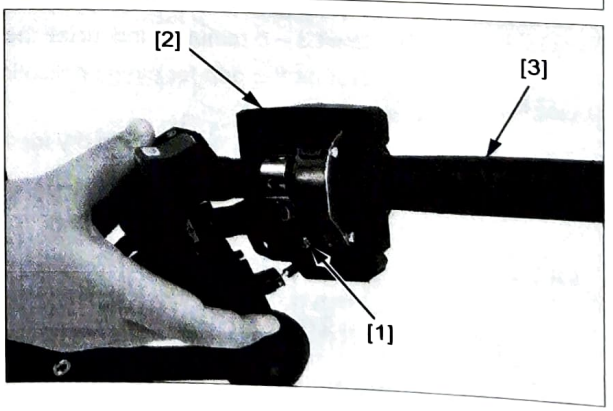

Remove the screw [1] and grip APS [2] from handle bar [3].

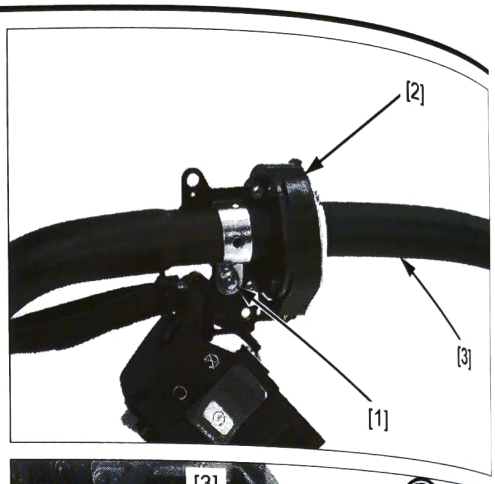

Remove the following:

- Four socket bolts [1]
- Two handlebar upper holders [2]
- Handlebar [3]

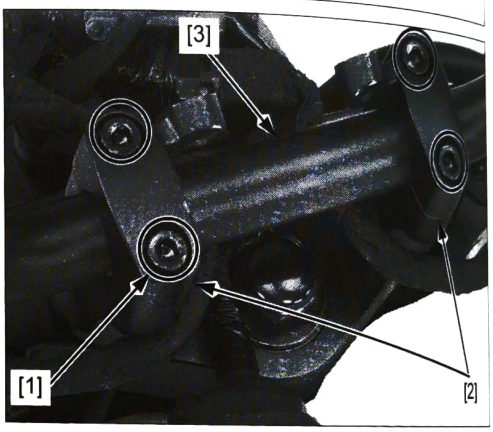

INSTALLATION

NOTE:

- A damaged or bent handlebar may cause breakage. Replace the damaged handlebar with a new one.
- Route the hoses, cables, and wires properly (page 1-27).

If the left handlebar grip are removed, clean the inside surface of the handlebar grip [1].

Apply Honda Bond A or an equivalent to the inside surface of the grip and outside surface of the handlebar [2].

Wait 3 – 5 minutes and install the grip.

Rotate the grip for even application of the adhesive.

NOTE:

- Allow the adhesive to dry for 1 hour before using.

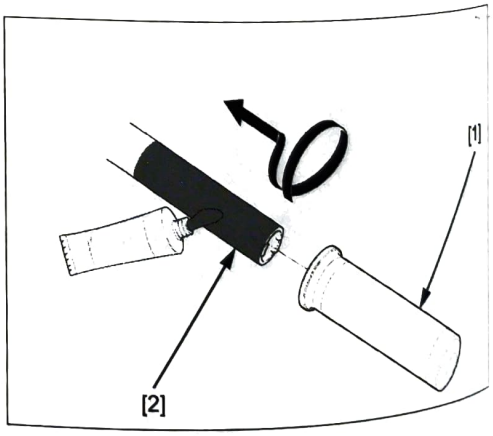

Install the grip APS [1] to the handlebar [2].

Set the setting plate [3].

NOTE:

- Align the setting plate tab with the handlebar hole.

Install and tighten the screw [4] securely.

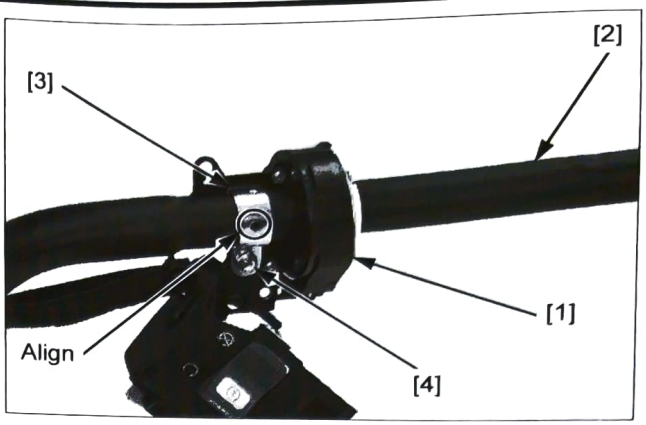

Place the handlebar [1] on the lower holders [2].

NOTE:

- Align the punch mark on the handlebar with the edge of the lower holder.

Install the handlebar upper holders [3].

Install the handlebar upper holder bolts [4].

Tighten the front bolts first, then the rear bolts to the specified torque.

TORQUE: 26 N·m (2.7 kgf·m, 19 lbf·ft)

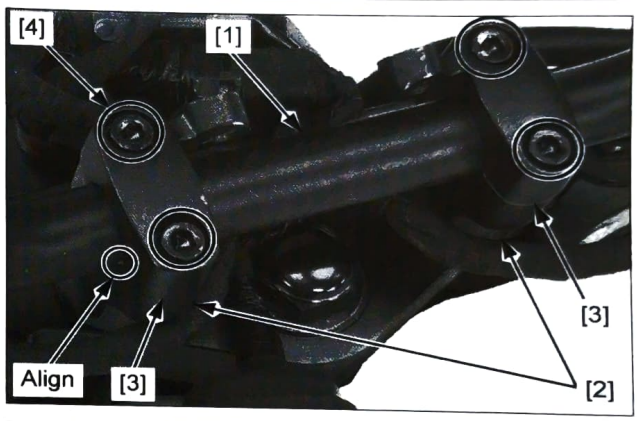

Apply grease to the throttle grip pipe [1] and APS [2] contact area as shown.

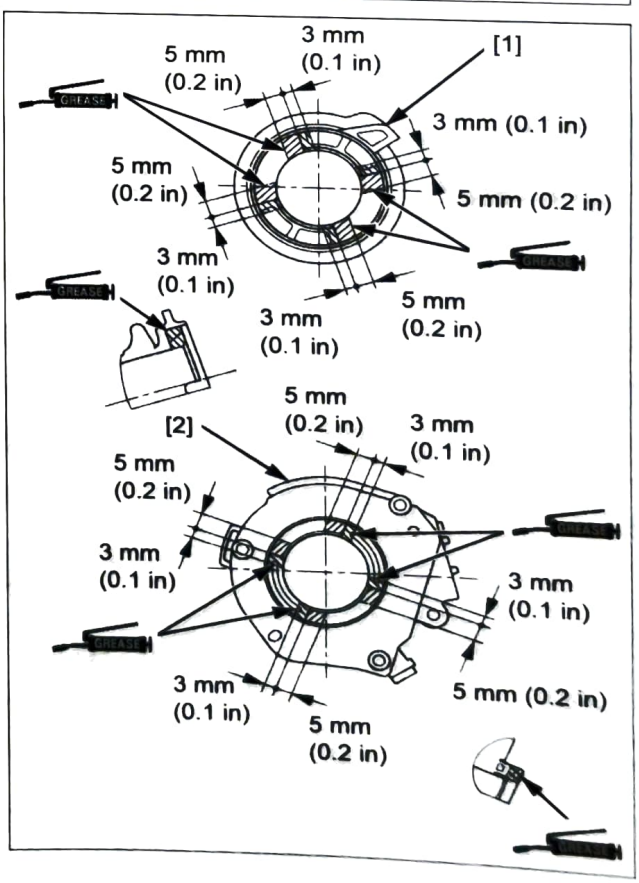

Install the throttle grip pipe [1] as shown.

NOTE:

- Align the throttle grip pipe tabs [2] with the grip APS grooves [3].

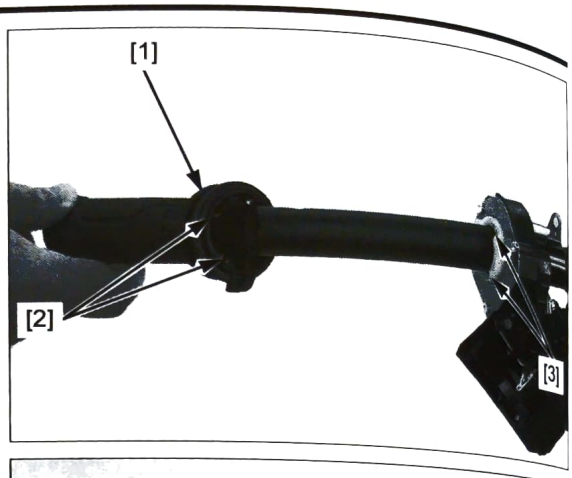

Install the right handlebar switch rear housing [1].

NOTE:

- Align the rear housing tabs with the holes.

Install and tighten the screw [2] securely.

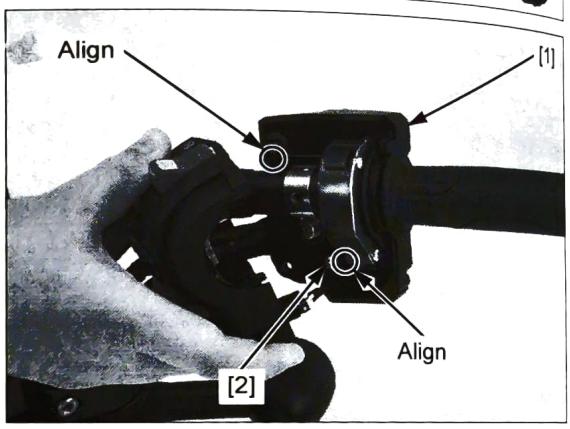

Install the right handlebar switch front housing [1].

NOTE:

- Align the front housing boss with the hole.

Install and tighten the right handlebar switch screws [2] to the specified torque.

TORQUE: 2.5 N·m (0.3 kgf·m, 1.8 lbf·ft)

Install the wire clip [3].

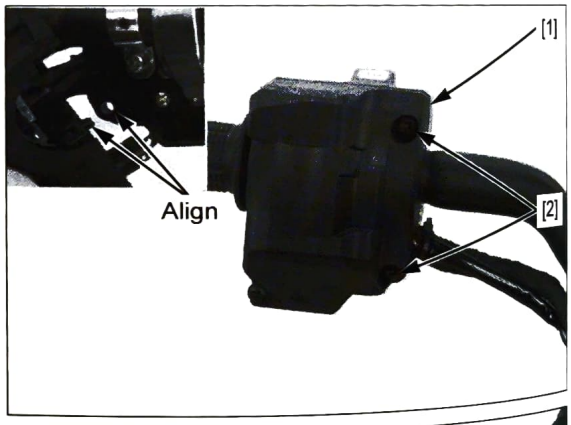

Install the front master cylinder [1] by aligning its end with the punch mark on the handlebar.

Install the front master cylinder holder [2] with its "UP" mark [3] facing up.

Install the front master cylinder holder bolts, and tighten the upper bolt [4] first, then the lower bolt [5] to the specified torque.

TORQUE: 12 N·m (1.2 kgf·m, 9 lbf·ft)

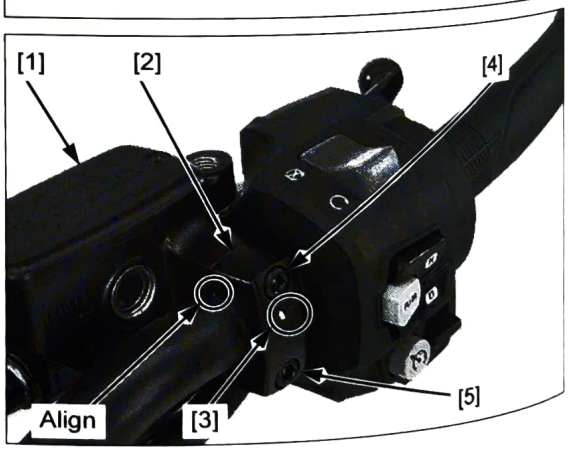

Connect the following:

- Front brake switch connectors (upper side) [1]
- Cruise cancel switch connectors (lower side) [2]

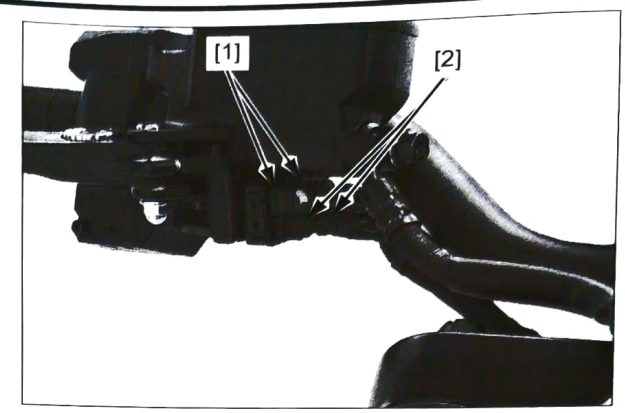

Install the left handlebar switch front housing [1] and the rear housing [2].

NOTE:

- Align the housing tab with the handlebar hole.

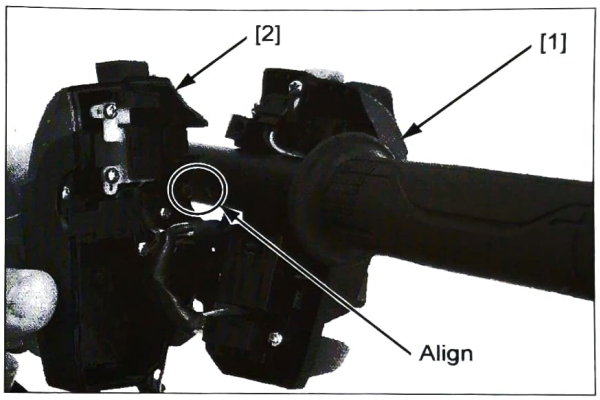

Install and tighten the left handlebar switch screws [1] to the specified torque.

TORQUE: 2.5 N·m (0.3 kgf·m, 1.8 lbf·ft)

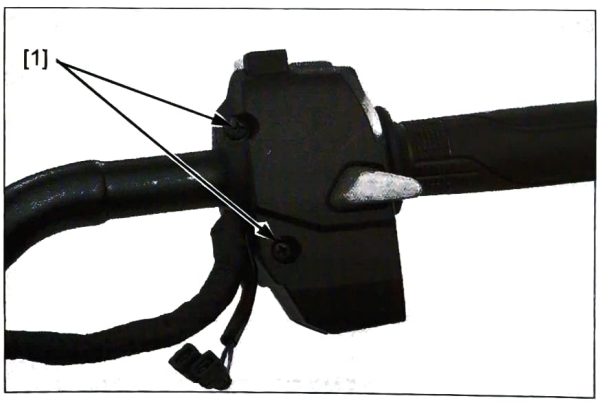

MT type: Install the clutch lever assembly [1] by aligning its end with the punch mark on the handlebar.

Install the holder [2] with its "UP" mark [3] facing up.

Install the bolts, and tighten the upper bolt [4] first, then the lower bolt [5].

Connect the clutch switch connectors (upper side) [6] and the cruise cancel switch connectors (lower side) [7].

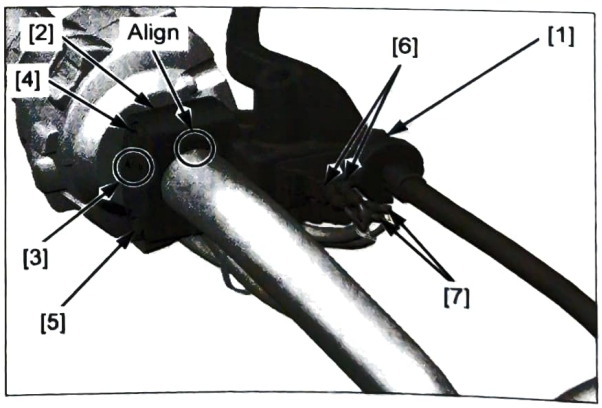

DCT type: Install the parking brake lever assembly [1].

NOTE:
- Align the housing tab with the handlebar hole.

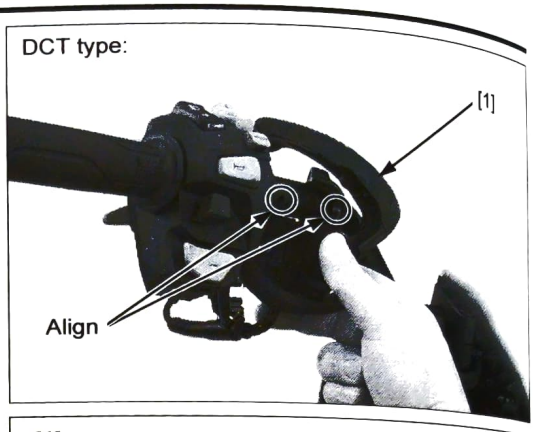

DCT type: Install and tighten the parking lever assembly socket bolts [1].

Connect the parking brake switch connectors [2].

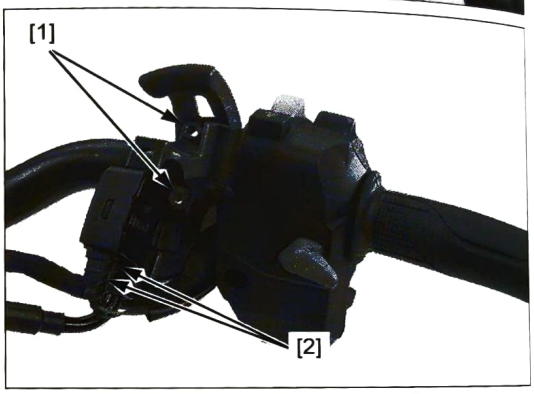

Install the wire clamps [1] to the handle bar.

Install the rear view mirror (page 2-6).
Install the combination meter (page 22-10).

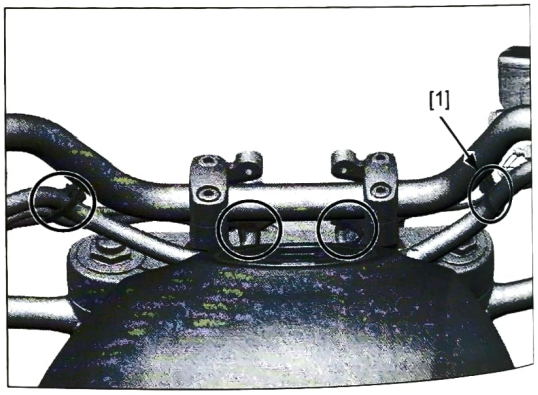

HANDLEBAR LOWER HOLDER REMOVAL/INSTALLATION

Remove the combination meter (page 22-8).

Loosen the handlebar lower holder nuts [1].

Remove the handlebar mounting socket bolts [2], handlebar holders [3] and handlebar [4] (page 17-6).

Remove the lower holder nuts and the handlebar lower holders [5].

Install the handlebar lower holders and the lower holder nuts.

Temporarily install the handlebar, handlebar holders and socket bolts (page 17-6).

NOTE:

- Align the punch mark on the handlebar with the edge of the lower holder.

Tighten the lower holder nuts to the specified torque.

TORQUE: 26 N·m (2.7 kgf·m, 19 lbf·ft)

Tighten the handlebar mounting socket bolts to the specified torque.

NOTE:

- Tighten the front bolts first, then the rear bolts.

TORQUE: 26 N·m (2.7 kgf·m, 19 lbf·ft)

Install the removed parts in the reverse order of removal.

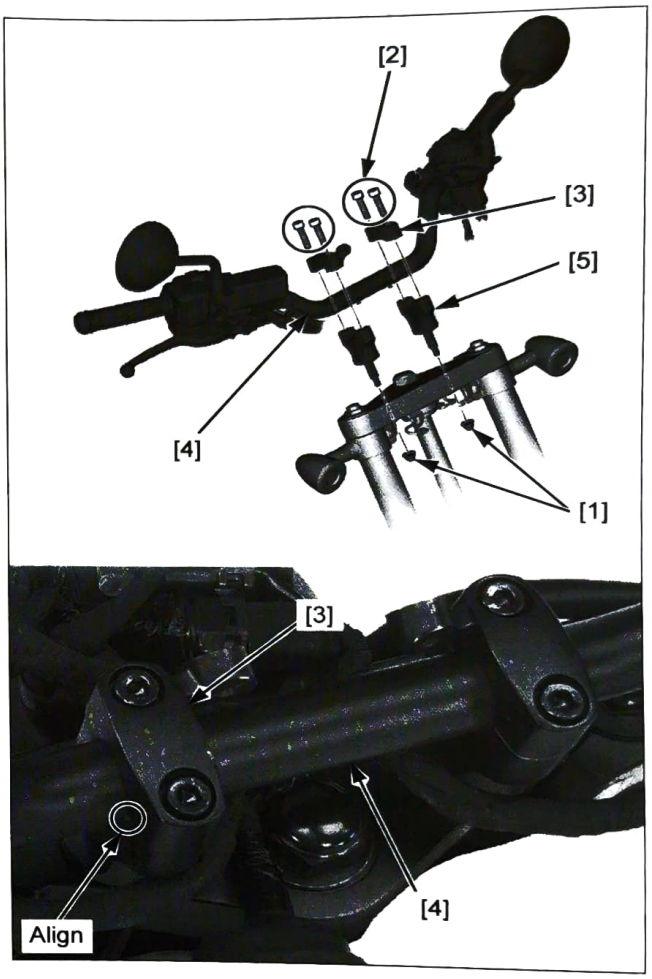

FRONT WHEEL

REMOVAL

Do not operate the brake lever after the brake caliper is removed.

Remove the axle bolt [1].

Support the motorcycle securely and raise the front wheel off the ground using a safety stand or hoist.

Loosen the right axle holder pinch bolts [2].

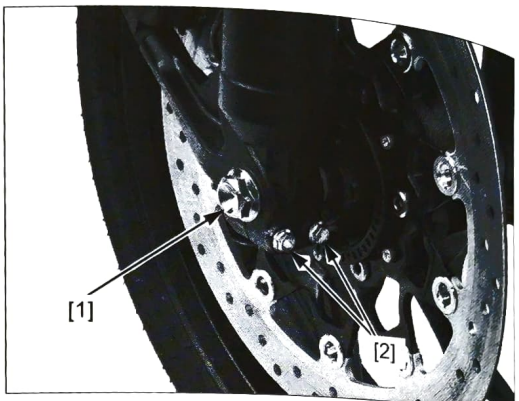

Loosen the left axle holder pinch bolts [1].

Remove the axle shaft [2] and the front wheel.

Remove the side collars [3].

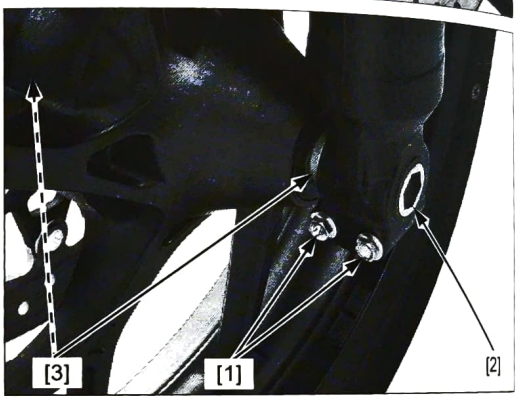

INSPECTION

Turn the inner race of each bearing with your finger. The bearings should turn smoothly and quietly. Also check that the bearing outer race fits tightly in the hub.

Replace the bearings if they do not turn smoothly, quietly, or if they fit loosely in the hub.

Inspect the following parts for damage, abnormal wear, deformation or bend.

- front axle
- wheel rim

Measure each part according to FRONT WHEEL/ SUSPENSION/STEERING SPECIFICATIONS (page 1-9).

Replace any part if it is out of service limit.

DISASSEMBLY/ASSEMBLY

Disassemble and assemble the front wheel as shown in the following illustration.

- Install each dust seal with the flat side facing out so that it is flush with the wheel hub.
- Install the brake disc with the rotation mark (arrow) facing out.

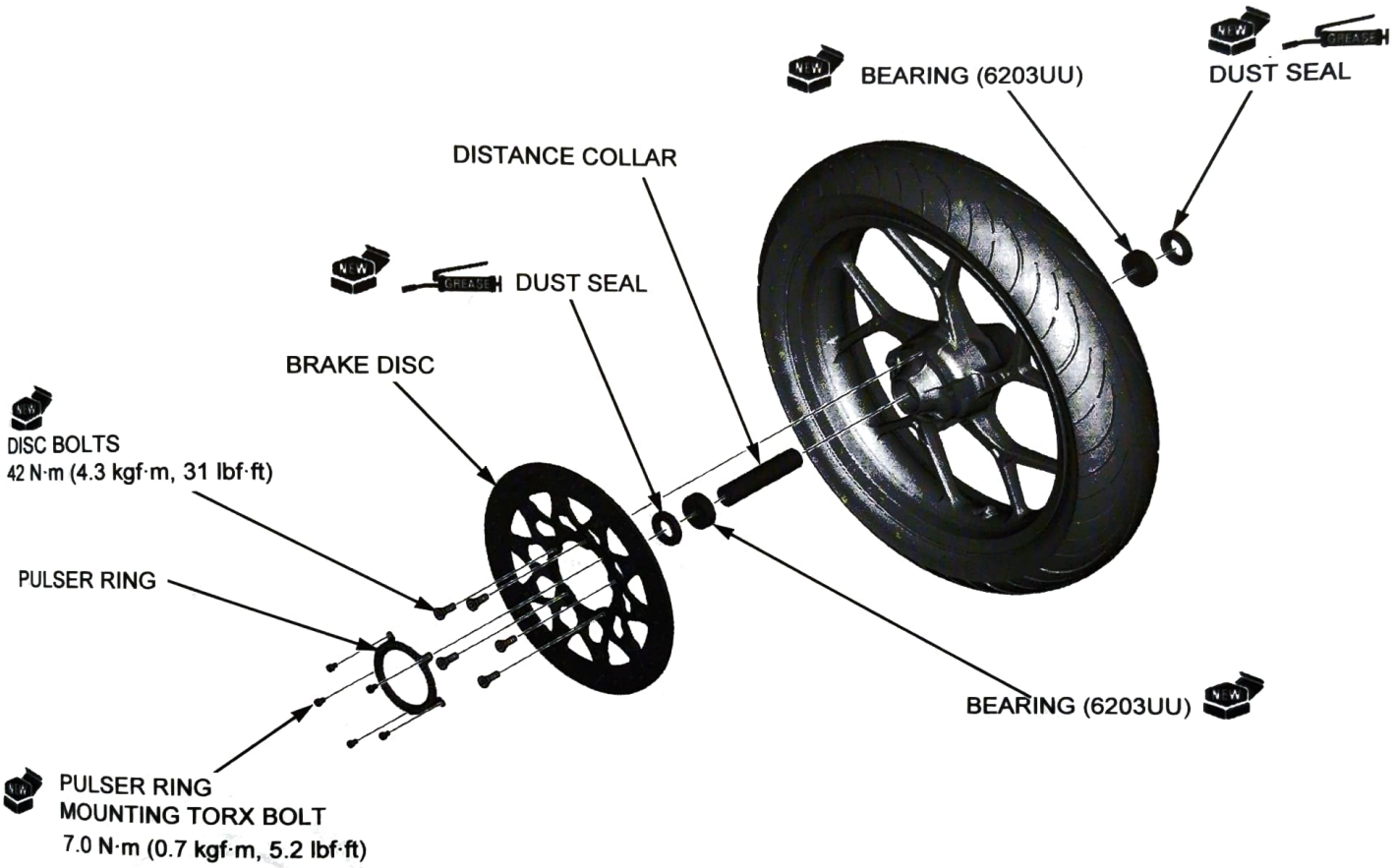

BEARING REPLACEMENT

Install the remover head [1] into the bearing.

From the opposite side of the wheel, install the bearing remover shaft [2] and drive the bearing out of the wheel hub using the below special tools.

TOOLS:

Bearing remover head, 20 mm	**07746-0050600**
Bearing remover shaft	**07746-0050100**

Remove the distance collar and drive out the other bearing.

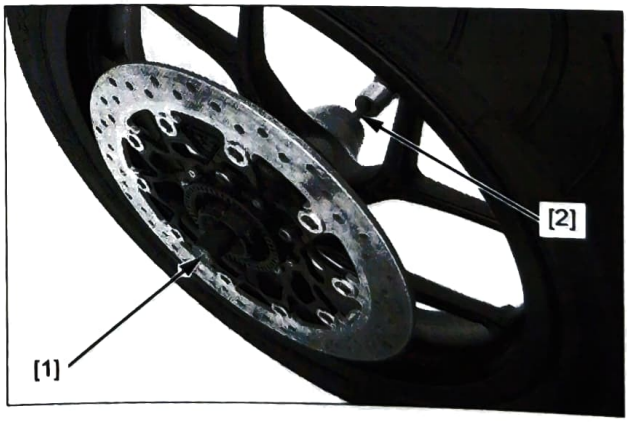

Drive in a new right side bearing (brake disc side) squarely with the marked side facing up until it is fully seated.

Install the distance collar.

Drive in a new left side bearing squarely with the marked side facing up until it is fully seated using the below special tools.

TOOLS:

[1] Driver	**07749-0010000**
[2] Attachment, 42 x 47 mm	**07746-0010300**
[3] Pilot, 20 mm	**07746-0040500**

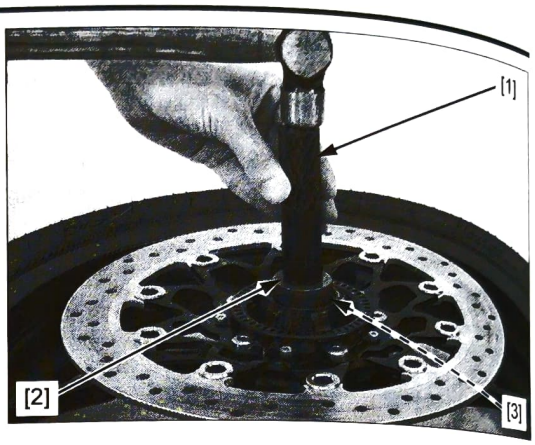

WHEEL BALANCE

NOTE:

- Mount the tire with the arrow mark [1] facing in the direction of rotation.
- For optimum balance, the tire balance mark [2] (light mass point: a paint dot on the side wall) must be located next to the valve stem [3]. Remount the tire if necessary.
- The wheel balance must be checked when the front tire is remounted.
- Stick-type balance weights should be used on this motorcycle. Use genuine Honda balance weights.
  - Before installing the weights, remove any adhesive from the rim thoroughly and clean the area where new weights are to be placed with degreasing agent. Take care not to scratch the rim surface.
  - Do not touch the adhesive surface of the weight with your bare hands when installing.
  - The balance weights are always replaced with new ones whenever they are removed. Do not reuse them.

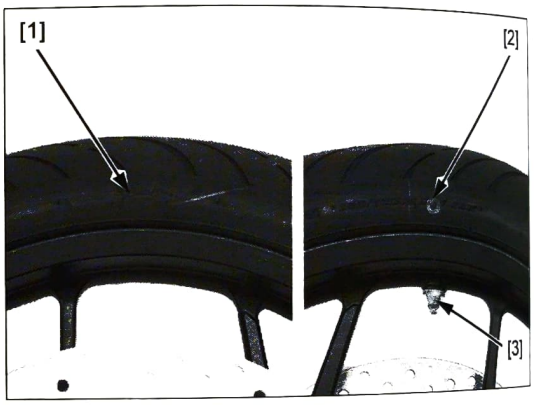

Mount the wheel, tire and brake disc assembly on an inspection stand [1].

Spin the wheel, allow it to stop, and mark the lowest (heaviest) part of the wheel with chalk.

Do this two or three times to verify the heaviest area.

If the wheel is balanced, it will not stop consistently in the same position.

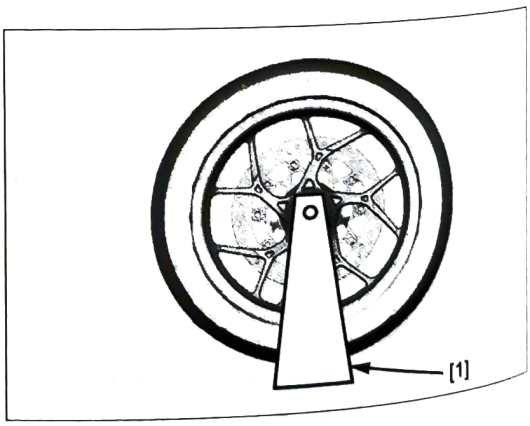

To balance the wheel, install the wheel weights [1] on the highest side of the rim, on the side opposite of the chalk marks. Add just enough weight so the wheel will no longer stop in the same position when it is spun. Do not add more than 60 g (2.1 oz) to the wheel.

Press the weights with your hands firmly and make sure they do not come off the rim.

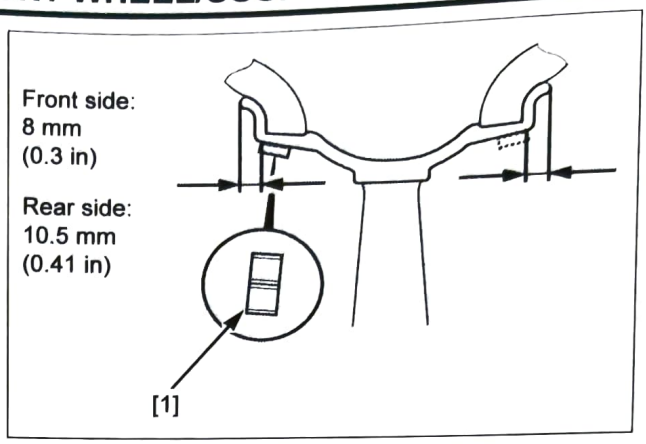

NOTE:

- The front wheel weights are attached to the position at 8 mm (0.3 in) from the side surface of the rim in the direction as shown.
- The rear wheel weights are attached to the position at 10.5 mm (0.41 in) from the side surface of the rim in the direction as shown.
- If the weight exceeds 10 g (0.4 oz), install the same amount of balance weights on the right and left symmetrical position.

INSTALLATION

Install the left and right side collars [1].

Install the front wheel between the fork legs.

Apply a thin layer of grease to the axle shaft [2] surface. Install the axle shaft from the left side.

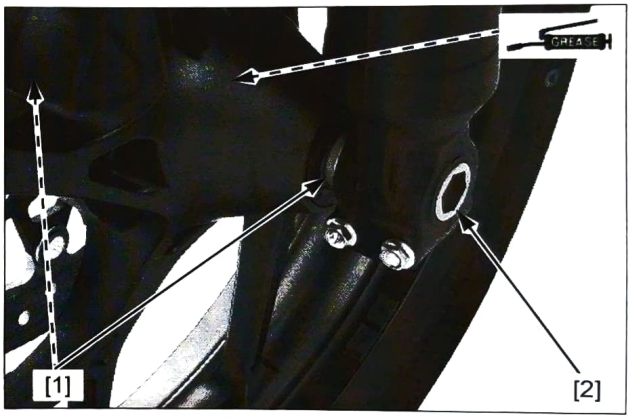

Hold the axle shaft and tighten the axle bolt [1] to the specified torque.

TORQUE: 59 N·m (6.0 kgf·m, 43 lbf·ft)

Tighten the right axle holder pinch bolts [2] to the specified torque.

TORQUE: 22 N·m (2.2 kgf·m, 16 lbf·ft)

With the front brake applied, pump the fork up and down several times to seat the axle and check the brake operation by applying the brake lever.

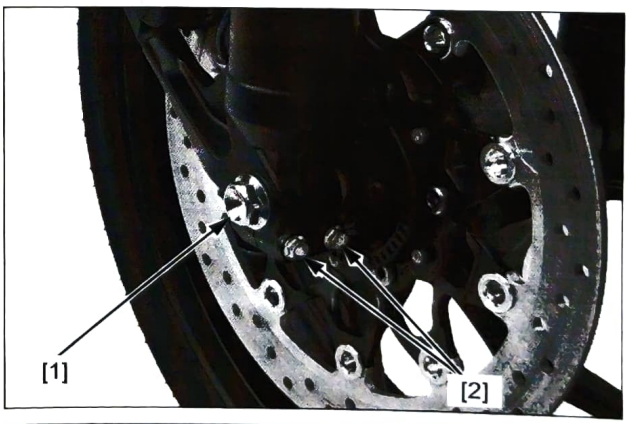

Tighten the left axle holder pinch bolts [1] to the specified torque.

TORQUE: 22 N·m (2.2 kgf·m, 16 lbf·ft)

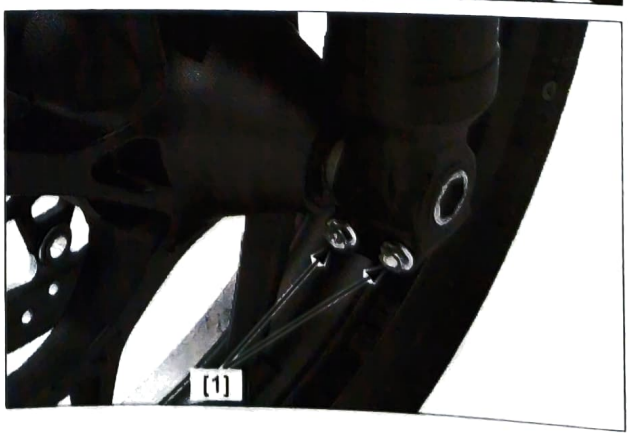

FORK

REMOVAL

Remove the front fender (page 2-7).

Support the brake caliper so it does not hang from the brake hose. Do not twist the brake hose.

Remove the following:

- Bolt [1]
- Clamp [2]
- Socket bolt [3]
- Front wheel speed sensor [4]
- ABS sensor guard [5]
- Caliper mounting bolts [6]
- Front brake caliper [7]

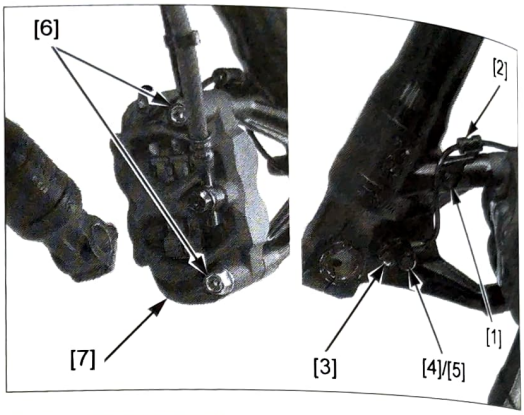

Keep the reservoir upright to prevent air from entering the hydraulic system.

Loosen the top bridge pinch socket bolt [1].

When the fork is ready to be disassembled, loosen the fork cap [2], but do not remove it.

Support the fork leg [3] securely.

Loosen the bottom bridge pinch socket bolt [4] and pull the fork leg down, then remove it out of the top and bottom bridges.

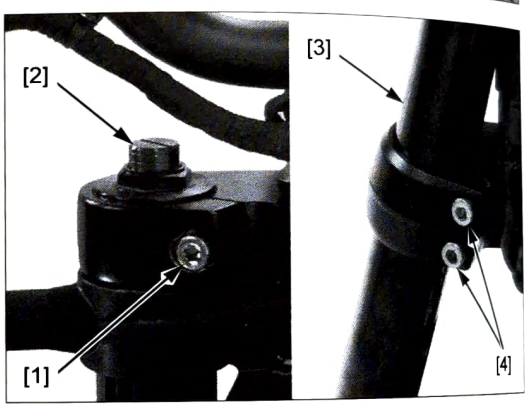

INSTALLATION

Align the top end of the fork pipe [1] with the upper surface of the top bridge as shown, then temporarily tighten the pinch bolt.

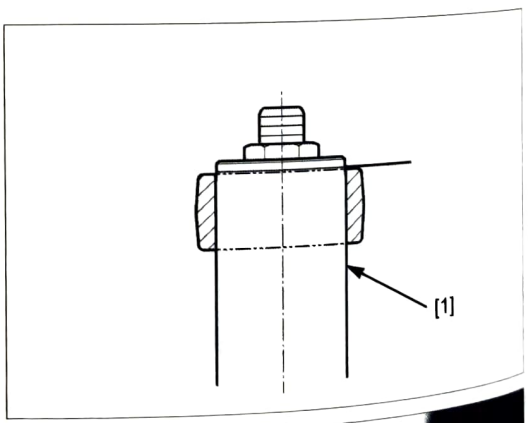

Tighten the bottom bridge pinch socket bolt [1] to the specified torque.

TORQUE: 25 N·m (2.5 kgf·m, 18 lbf·ft)

Tighten the fork cap [2] to the specified torque if it was removed.

TORQUE: 22 N·m (2.2 kgf·m, 16 lbf·ft)

Tighten the top bridge pinch socket bolt [3] to the specified torque.

TORQUE: 22 N·m (2.2 kgf·m, 16 lbf·ft)

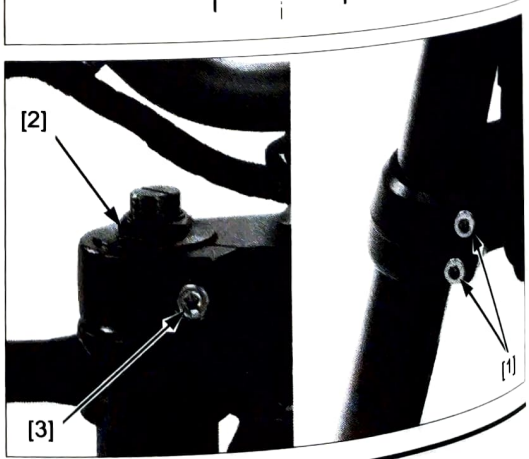

Install the front brake caliper [1] with new mounting bolts [2], and tighten them to the specified torque.

TORQUE: 45 N·m (4.6 kgf·m, 33 lbf·ft)

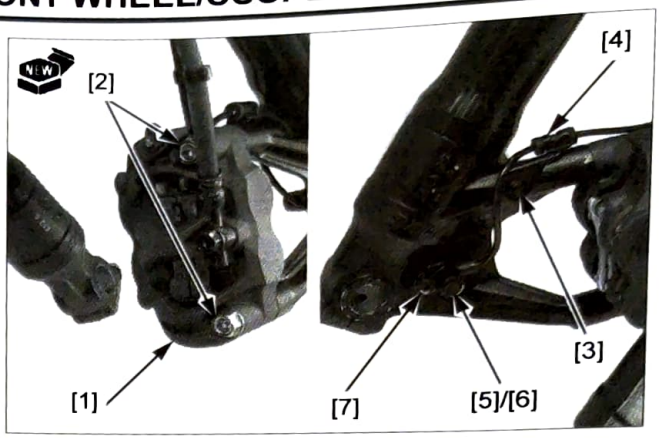

Install the following:

- Bolt [3]
- Clamp [4]
- Front wheel speed sensor [5]
- ABS sensor guard [6]
- Socket bolt [7]
- Front fender (page 2-7)
- Front wheel (page 17-17)

DISASSEMBLY

Right:

Fork cap is under spring pressure; use care when loosing it.

Remove the following:

- Fork cap [1]
- O-ring [2]

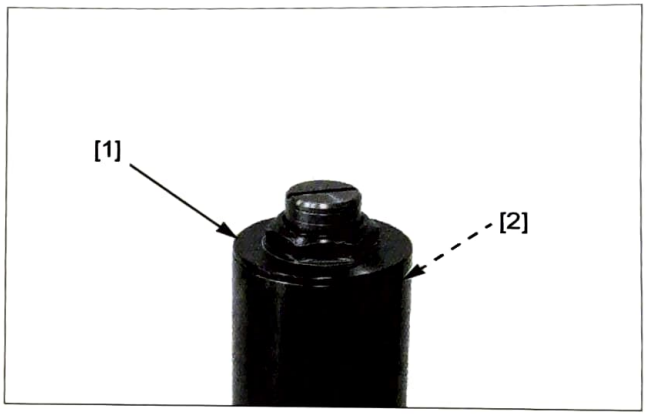

- Spring collar [1]
- Spring seat [2]
- Fork spring [3]

Pour out the fork fluid by pumping the fork tube up and down several times.

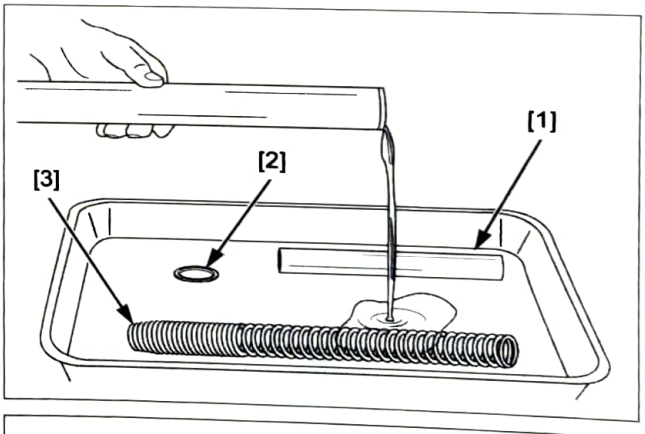

Hold the fork slider [1] in a vise with soft jaws or shop towels.

If the fork piston turns with the socket bolt, temporarily install the below components (spring, spring seat, spring collar, and fork cap).

Remove the following:

- Fork socket bolt [2]
- Sealing washer [3]

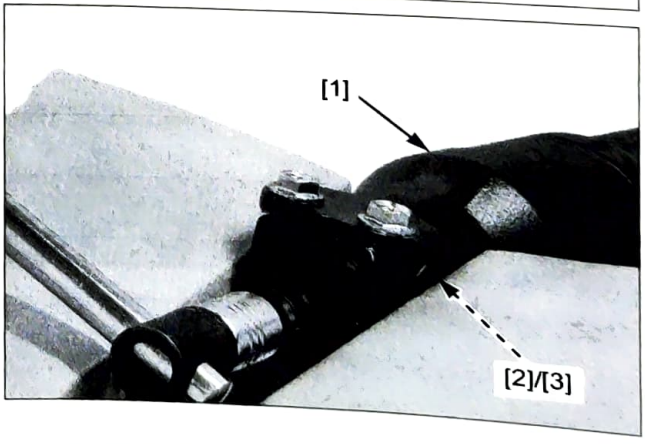

– Seat pipe [1]
– Rebound spring [2]

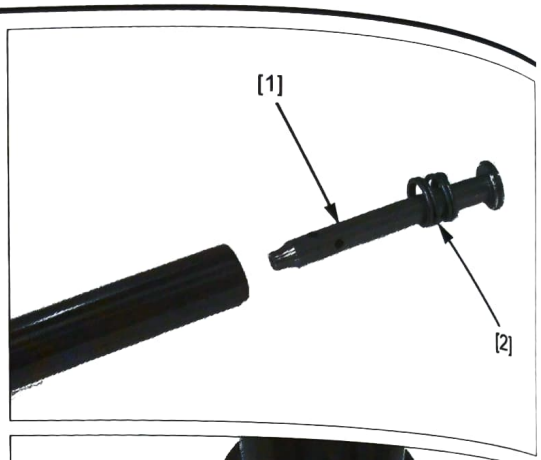

Be careful not to scratch the fork tube.

– Dust seal [1]
– Stopper ring [2]

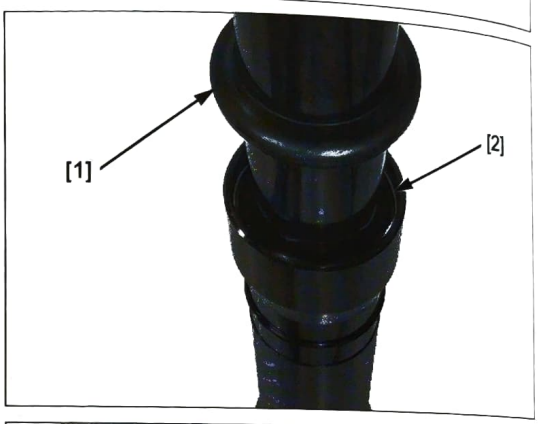

Using quick successive motions, pull the fork tube out of the fork slider.

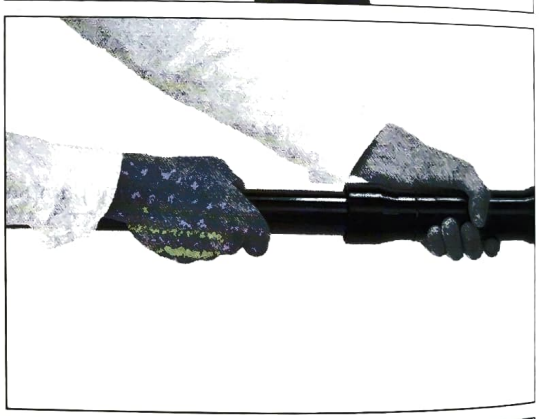

Remove the following:

– Oil lock piece [1]
– Oil seal [2]
– Back-up ring [3]
– Guide bushing [4]

Do not remove the fork tube bushing, unless it is necessary to replace with a new one (page 17-23).

Carefully remove the fork tube bushing [5] by prying the slit with a flat blade screwdriver until the bushing can be pulled off by hand.

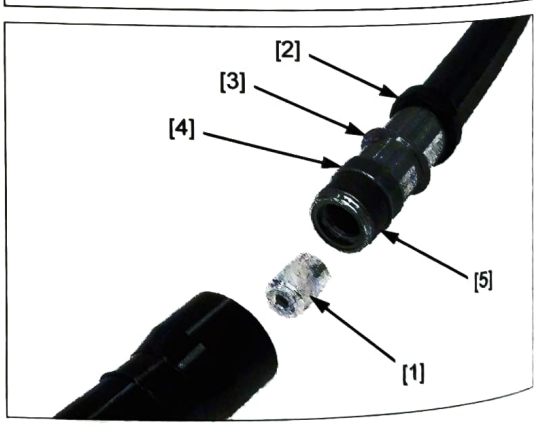

Left:

Fork cap is under spring pressure; use care when loosing it.

Remove the fork cap [1]

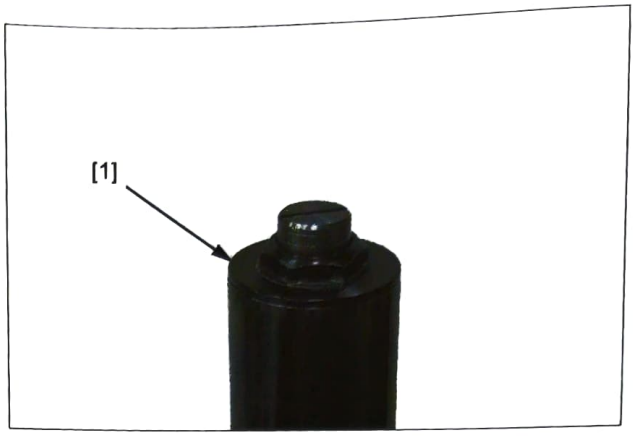

Hold the fork cap [1] as shown and loosen the fork lock nut [2].

Remove the O-ring [3].

Compress the fork spring, then remove the spring stopper [4].

Remove the following:

- Spring collar [5]
- Spring seat [6]
- Fork spring [7]

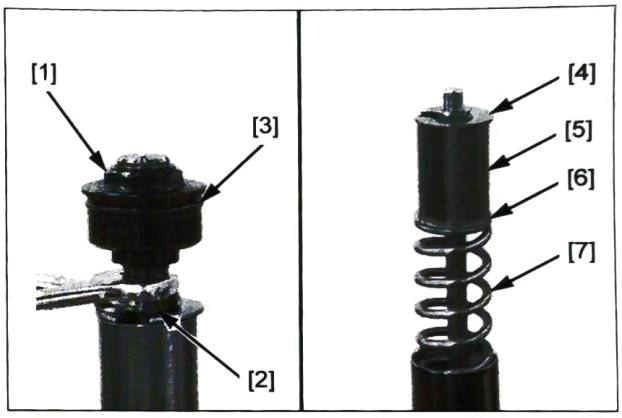

Pour out the fork fluid by pumping the fork tube up and down several times.

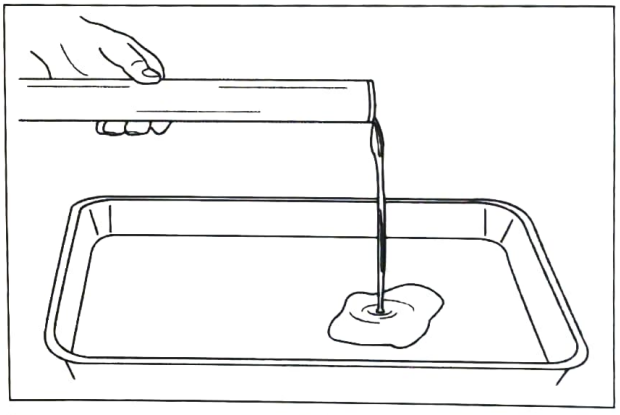

Hold the fork slider [1] in a vise with soft jaws or shop towels.

If the fork piston turns with the socket bolt, temporarily install the below components (spring, spring seat, spring collar, and fork cap).

Remove the following:

- Fork socket bolt [2]
- Sealing washer [3]

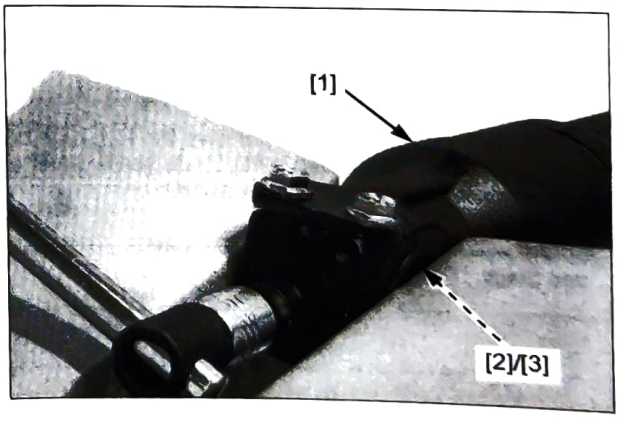

– Fork damper [1]
– Rebound spring [2]

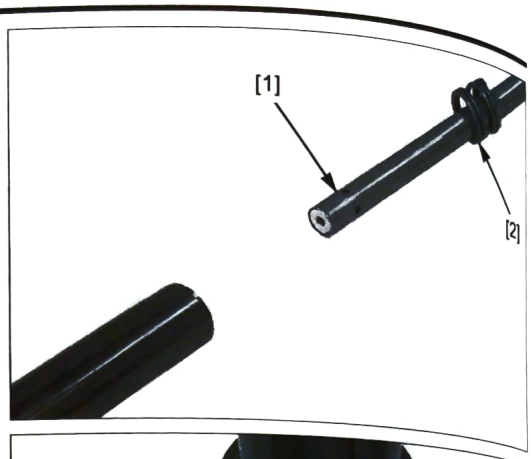

Be careful not to scratch the fork tube.

– Dust seal [1]
– Stopper ring [2]

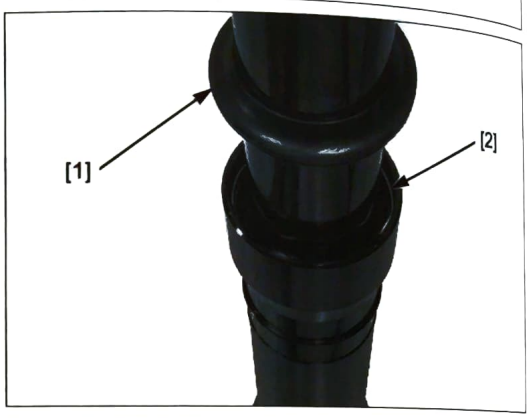

Using quick successive motions, pull the fork tube out of the fork slider.

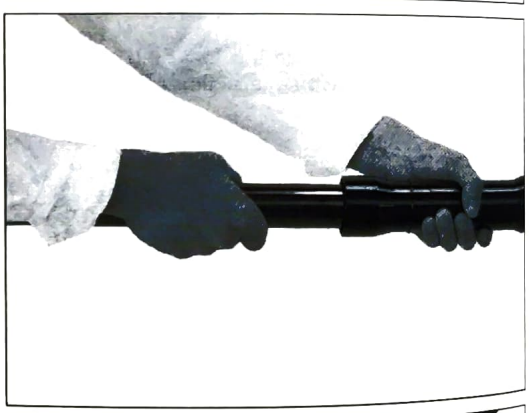

Remove the following:

– Oil lock piece [1]
– Oil seal [2]
– Back-up ring [3]
– Guide bushing [4]

Do not remove the fork tube bushing, unless it is necessary to replace with a new one (page 17-23).

Carefully remove the fork tube bushing [5] by prying the slit with a flat blade screwdriver until the bushing can be pulled off by hand.

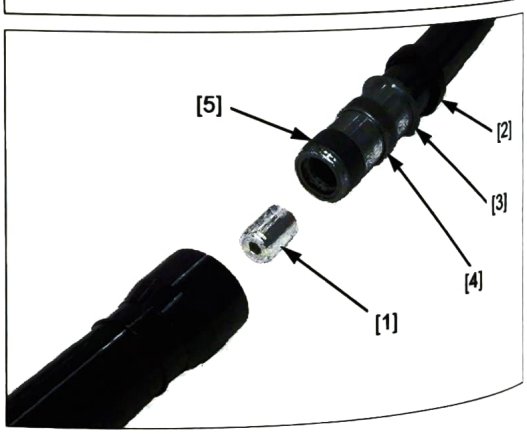

INSPECTION

Inspect the following parts for damage, abnormal wear, bend, deformation, scoring and Teflon coating wear.

- Fork tube
- Fork slider
- Fork spring
- Rebound spring
- Piston ring
- Fork piston
- Oil lock piece
- Guide bushing
- Fork tube bushing
- Buck-up ring

Measure each part according to FRONT WHEEL/ SUSPENSION/STEERING SPECIFICATIONS (page 1-9).

Replace any part if it is outside of service limit.

ASSEMBLY

NOTE:

- Use Teflon-containing grease (Liquid O-ring #400 or equivalent) for the oil seal lips and fork dust seals.

Right:

Before assembly, wash all parts with a high flash point or non-flammable solvent and wipe them off completely.

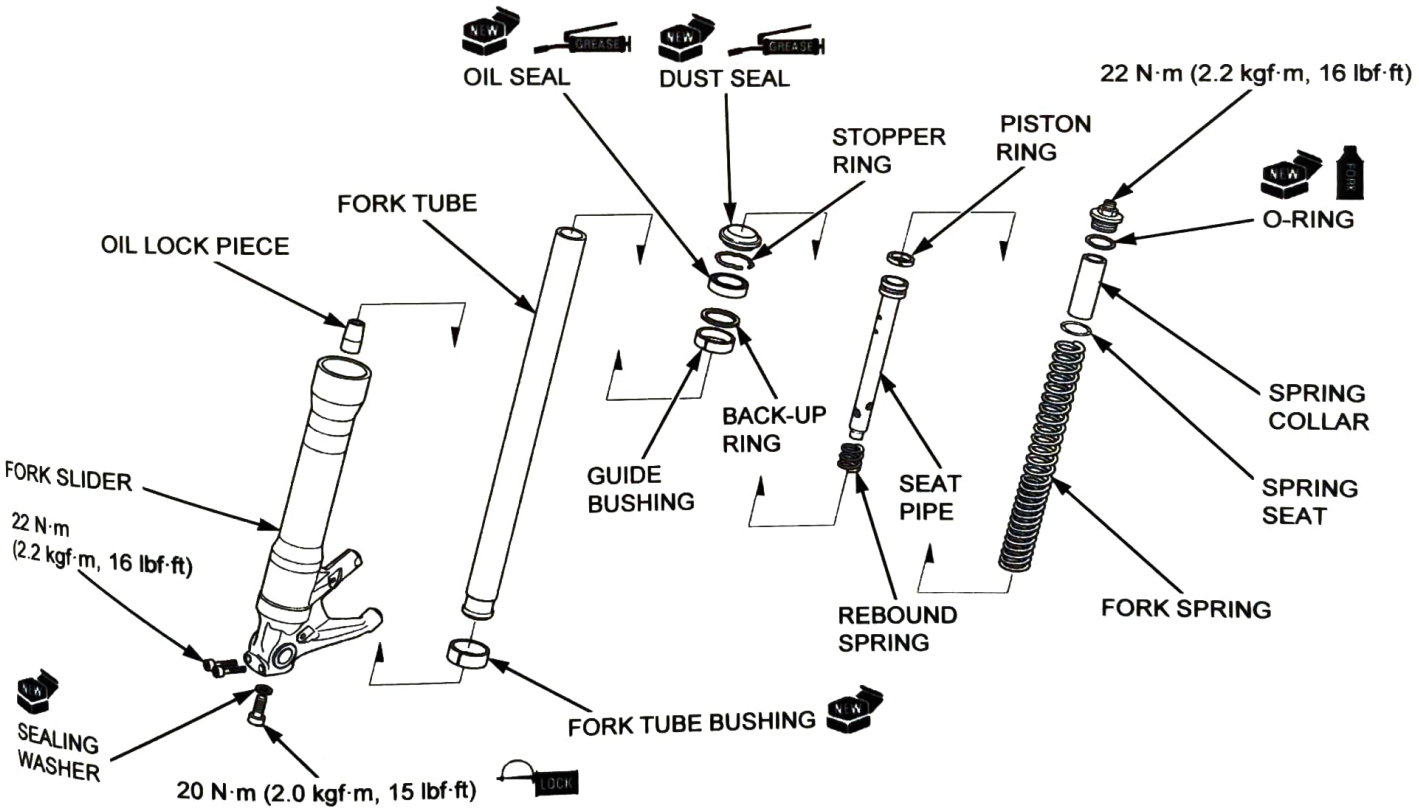

Be careful not to damage the coating on the bushing. Do not spread open the bushing more than necessary.

Install a new fork tube bushing [1] if it has been removed.

NOTE:

- Remove the burrs from the bushing mating surface, being careful not to peel off the coating.

Install the following:

- Rebound spring [2] (onto the seat pipe)
- Seat pipe [3] (into the fork tube)
- Oil lock piece [4] (onto the seat pipe)

Install the fork tube [5] into the fork slider.

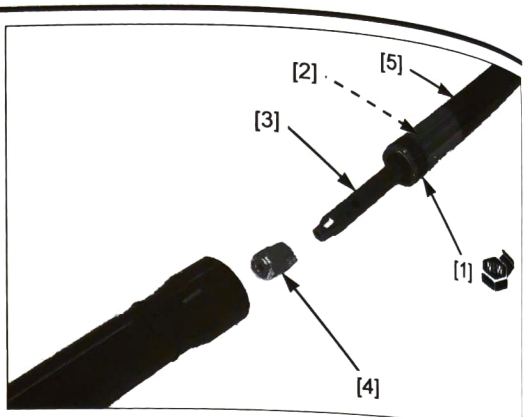

Hold the fork slider in a vise with soft jaws or shop towels.

Apply locking agent to the threads of the fork socket bolt [1].

If the fork piston turns with the socket bolt, temporarily install the fork spring, spring collar and fork cap.

Install the socket bolt with a new sealing washer [2] and tighten it to the below specified torque.

TORQUE: 20 N·m (2.0 kgf·m, 15 lbf·ft)

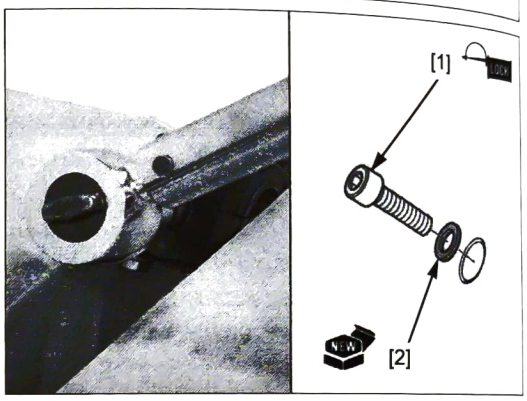

Place the guide bushing [1] over the fork tube and rest it on the slider. Put the back-up ring [2] and an old bushing or equivalent tool on the guide bushing.

Drive the bushing into place, using the below special tools.

TOOLS:

[3] Fork seal driver 07947-KA50100
[4] Fork seal driver attachment, 43 mm 07947-KA40200

Wrap vinyl tape around the fork tube top end to avoid damaging the oil seal lip.

Apply Teflon-containing grease to the lips of a new oil seal [5] and install it with the marking facing up.

Drive the oil seal until the stopper ring groove [6] is visible using the same tools.

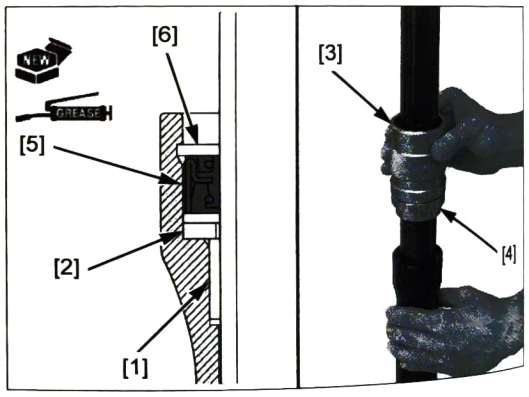

Be careful not to scratch the fork tube.

Install the stopper ring [1] into the groove in the fork slider.

Apply Teflon-containing grease to the lips of a new dust seal [2] and install it.

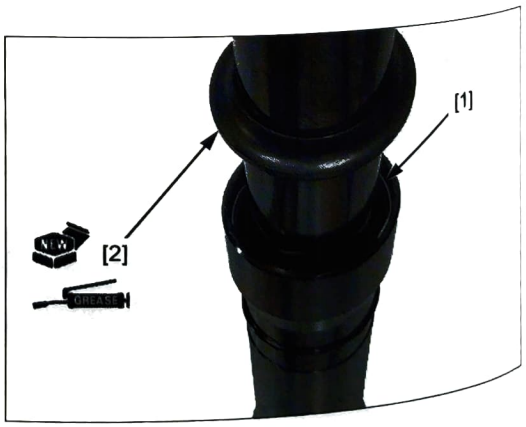

Pour the specified amount of recommended fork fluid into the fork tube.

RECOMMENDED FORK FLUID:
Fork Fluid (viscosity: 10 W)

FORK FLUID CAPACITY:
484 ± 2.5 cm³ (16.4 ± 0.08 US oz, 17.0 ± 0.09 Imp oz)

Slowly pump the fork tube several times to remove any trapped air from the lower portion of the fork tube.

Compress the fork tube fully and measure the fluid level from the top end of the fork tube.

FLUID LEVEL [1]: 160 mm (6.3 in)

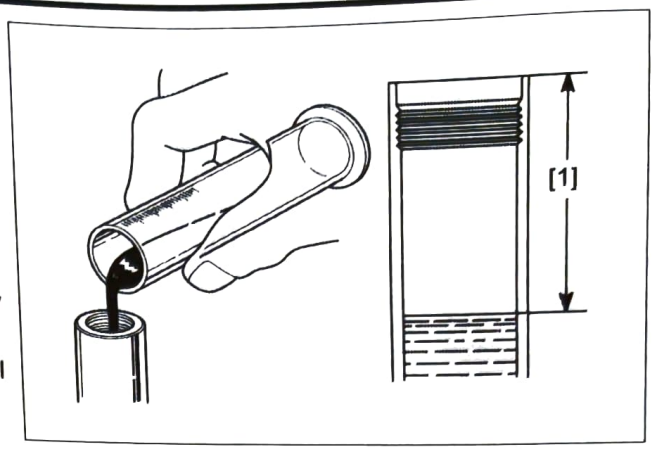

Pull the fork tube up and install the fork spring [1] with the tightly wound coil side facing down.

Install the spring seat [2] and spring collar [3].

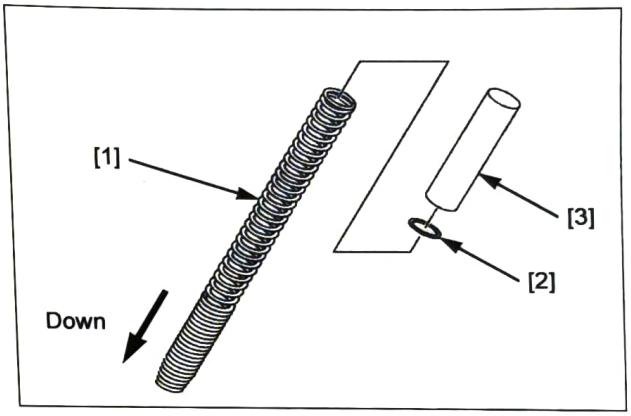

Coat a new O-ring [1] with fork fluid and install it into the groove in the fork cap [2].

Tighten the fork cap after installing the fork tube into the fork bridges.

Install the fork cap into the fork tube.

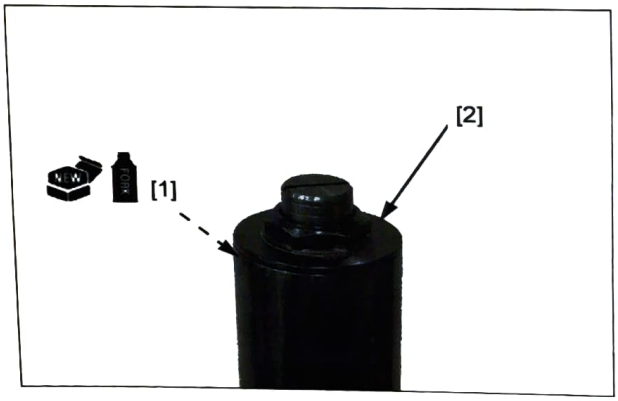

Left:

Before assembly, wash all parts with a high flash point or non-flammable solvent and wipe them off completely.

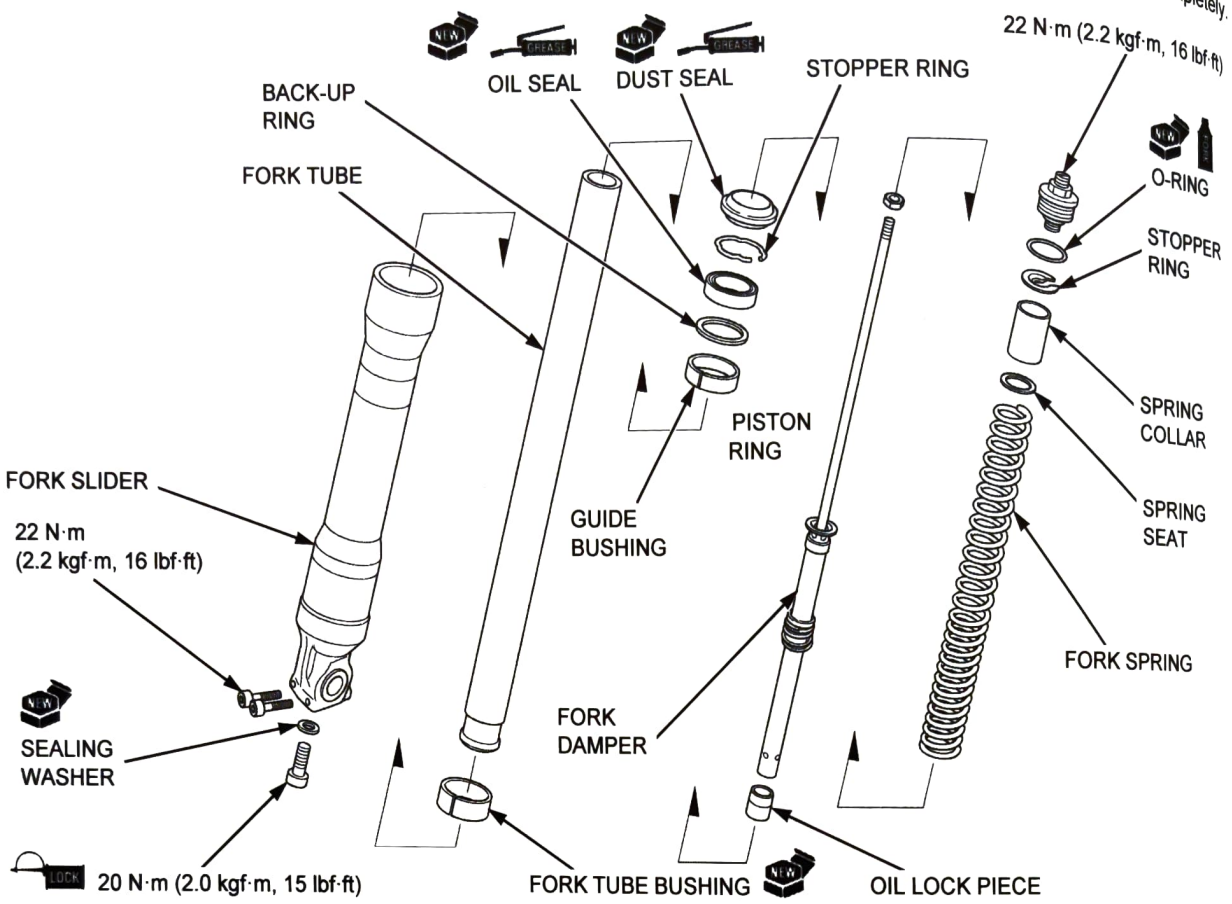

Be careful not to damage the coating on the bushing. Do not spread open the bushing more than necessary.

Install a new fork tube bushing [1] if it has been removed.

NOTE:

- Remove the burrs from the bushing mating surface, being careful not to peel off the coating.

Install the following:

- Rebound spring [2] (onto the fork damper)
- Fork damper [3] (into the fork tube)
- Oil lock piece [4] (onto the fork damper)

Install the fork tube [5] into the fork slider.

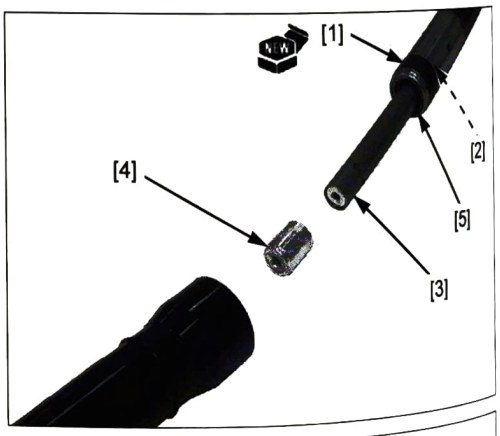

Hold the fork slider in a vise with soft jaws or shop towels.

Apply locking agent to the threads of the fork socket bolt [1].

If the fork piston turns with the socket bolt, temporarily install the fork spring, spring collar and fork cap.

Install the socket bolt with a new sealing washer [2] and tighten it to the specified torque.

TORQUE: 20 N·m (2.0 kgf·m, 15 lbf·ft)

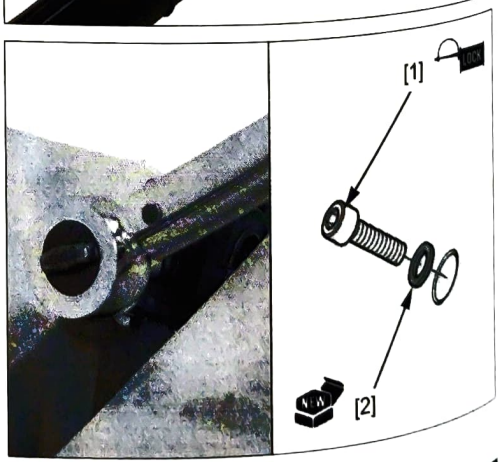

Place the guide bushing [1] over the fork tube and rest it on the slider. Put the back-up ring [2] and an old bushing or equivalent tool on the guide bushing.

Drive the bushing into place, using the below special tools.

TOOLS:

[3] Fork seal driver	**07947-KA50100**
[4] Fork seal driver attachment, 43 mm	**07947-KA40200**

Wrap vinyl tape around the fork tube top end to avoid damaging the oil seal lip.

Apply Teflon-containing grease to the lips of a new oil seal [5] and install it with the marking facing up.

Drive the oil seal until the stopper ring groove [6] is visible using the same tools.

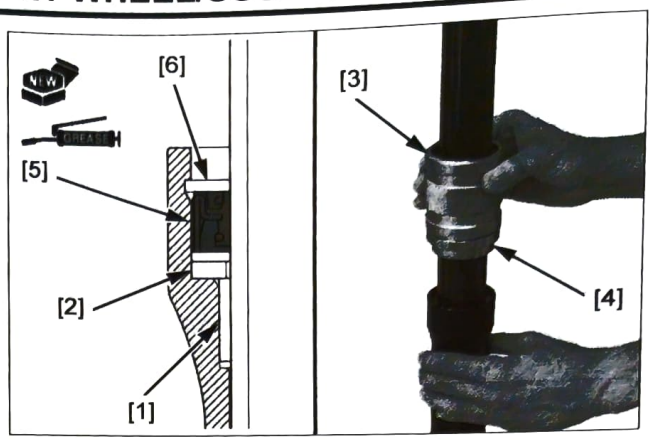

Be careful not to scratch the fork tube.

Install the stopper ring [1] into the groove in the fork slider.

Apply Teflon-containing grease to the lips of a new dust seal [2] and install it.

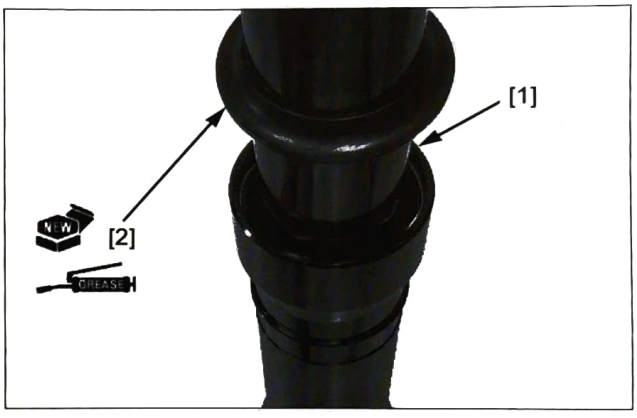

Pour the specified amount of recommended fork fluid into the fork tube.

RECOMMENDED FORK FLUID:
Fork Fluid (viscosity: 10 W)

FORK FLUID CAPACITY:
447 ± 2.5 cm³ (15.1 ± 0.08 US oz, 15.7 ± 0.09 Imp oz)

Slowly pump the fork tube several times to remove any trapped air from the lower portion of the fork tube.

Compress the fork tube fully and measure the fluid level from the top end of the fork tube.

FLUID LEVEL [1]: 162 mm (6.4 in)

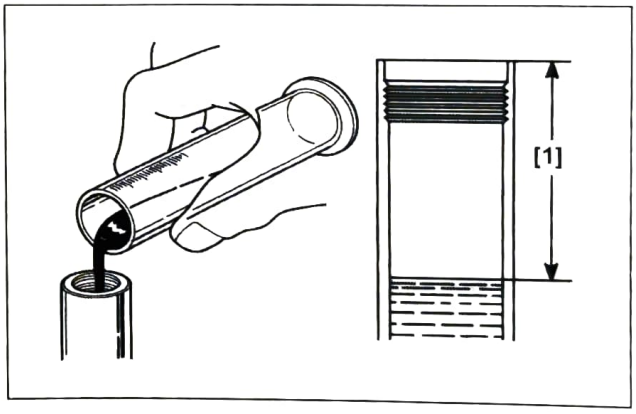

Pull the fork tube up and install the fork spring [1] with the tightly wound coil side facing down.

Install the spring seat [2] and spring collar [3].

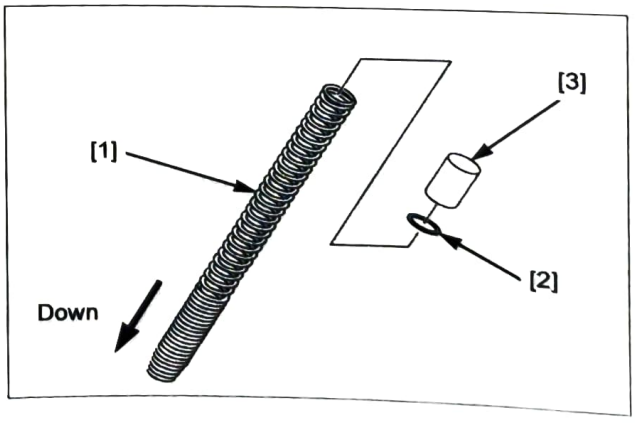

Compress the fork spring, then install the spring stopper [1].

Coat a new O-ring [2] with fork fluid and install it into the groove in the fork cap [3].

Install the fork cap to the fork damper until it is fully seated.

Tighten the fork lock nut [4].

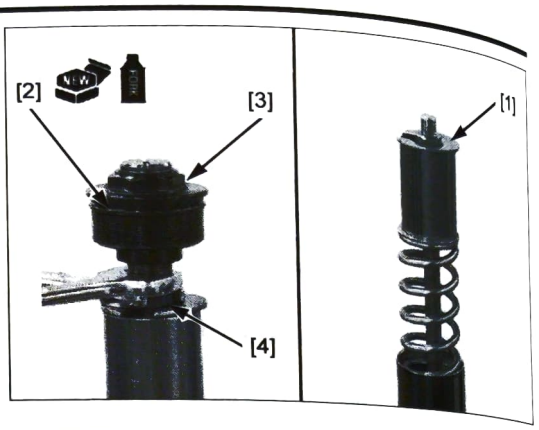

Tighten the fork cap after installing the fork tube into the fork bridges.

Install the fork cap [1] into the fork tube.

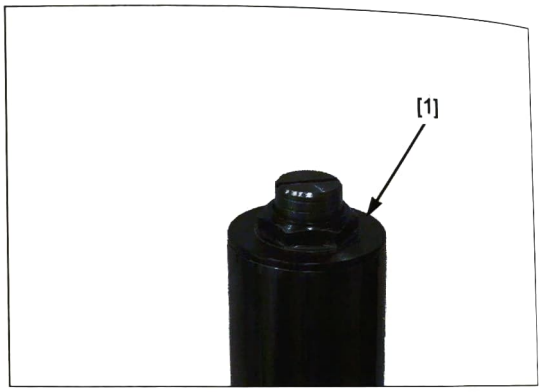

STEERING STEM

REMOVAL

Remove the headlight bracket (page 22-4).

Remove the bolt [1] and harness stay [2].

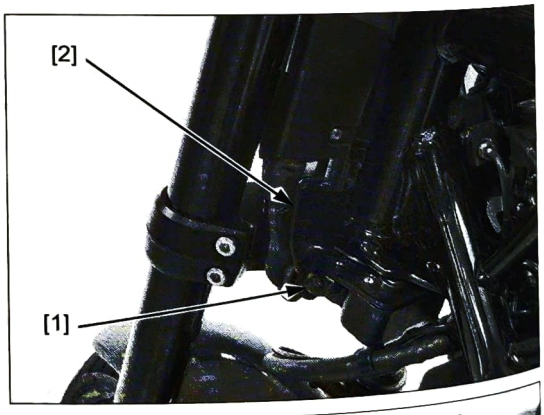

Remove the handlebar (page 17-6).

Loosen the steering stem nut [1] and top bridge pinch socket bolts [2].

Remove the fork legs (page 17-18).

Remove the following:

- Stem nut
- Collar [3]
- Top bridge [4]

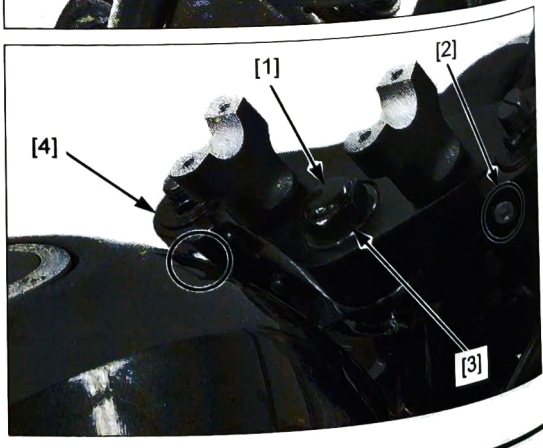

Straighten the lock washer tabs [1].

Remove the lock nut [2] and lock washer.

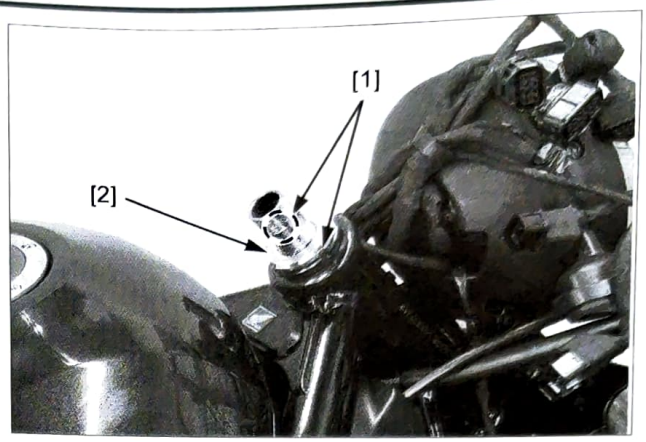

Loosen the steering bearing adjustment nut [1] using the below special tool.

TOOL:

[2] Steering stem socket **07916-3710101**

While holding the steering stem, remove the adjustment nut and upper dust seal [3].

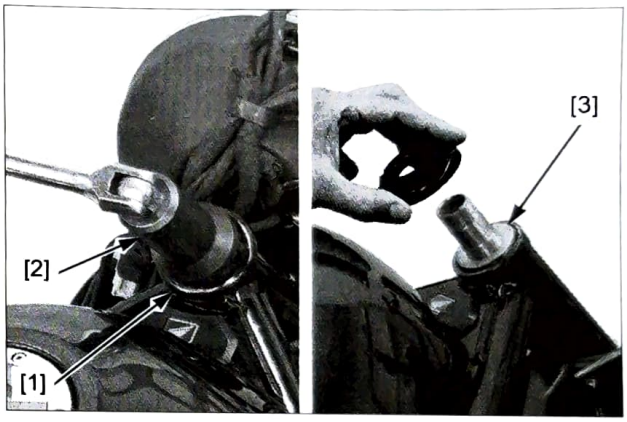

Remove the following:

- Steering stem [1]
- Upper inner race [2]
- Upper steering bearing [3]
- Lower steering bearing [4]

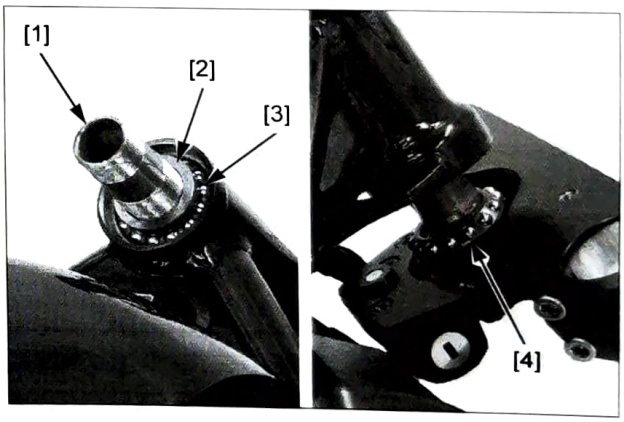

BEARING REPLACEMENT

Always replace the bearing and races as a set.

Remove the upper outer race using the below special tools.

TOOLS:

Ball race remover set	**07953-MJ10000**
– [1] Remover attachment	**07953-MJ10100**
– [2] Remover shaft	**07953-MJ10200**

U.S.A. TOOLS:

Ball race remover set	**07953-MJ1000B**

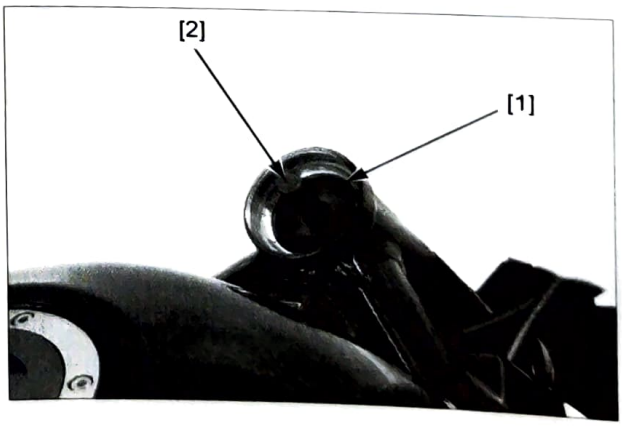

Remove the lower outer race using the below special tool and a suitable shaft.

TOOL:

[1] Bearing remover	**07946-3710500**

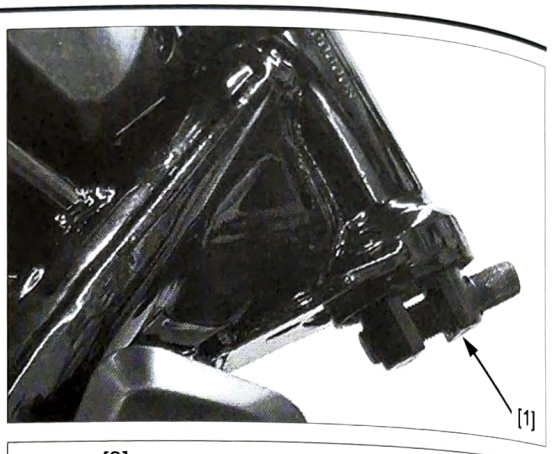

Install the stem nut [1] onto the steering stem [2] to prevent the threads from being damaged when removing the lower inner race [3].

Remove the lower inner race with a chisel or equivalent tool, being careful not to damage the stem.

Remove the lower dust seal [4].

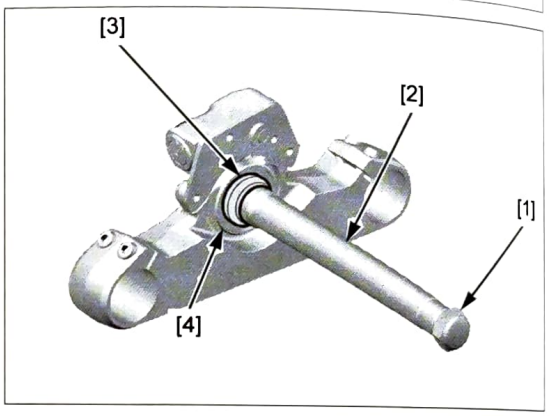

Install a new lower dust seal [1] onto the steering stem.

Press a new lower inner race [2] using the below special tool.

TOOL:

[3] Steering stem driver	**07946-MB00000**

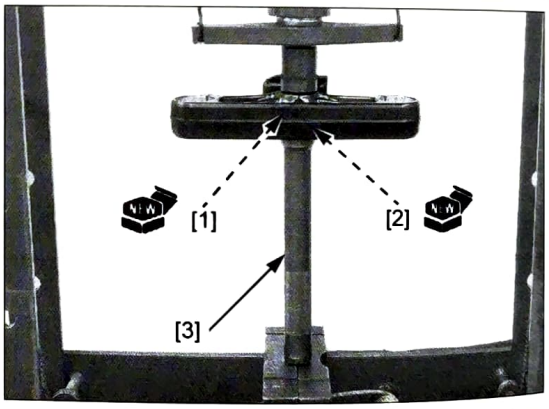

Drive in a new upper outer race [1] into the steering head pipe using the below special tool.

TOOLS:

[2] Driver	**07749-0010000**
[3] Attachment, 41.5 x 46.5 mm	**07945-3330100**

Drive in a new lower outer race using the below special tool.

TOOLS:

Driver	**07749-0010000**
Attachment, 52 x 55 mm	**07746-0010400**

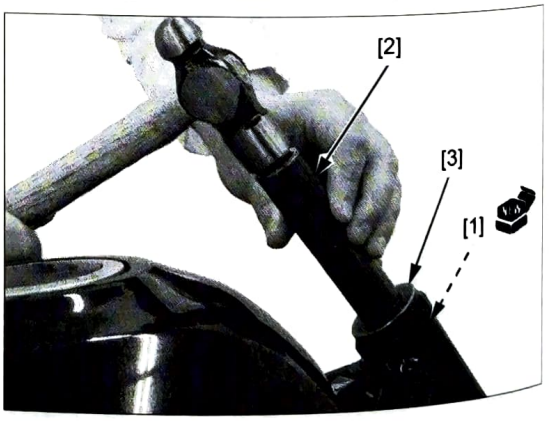

INSTALLATION

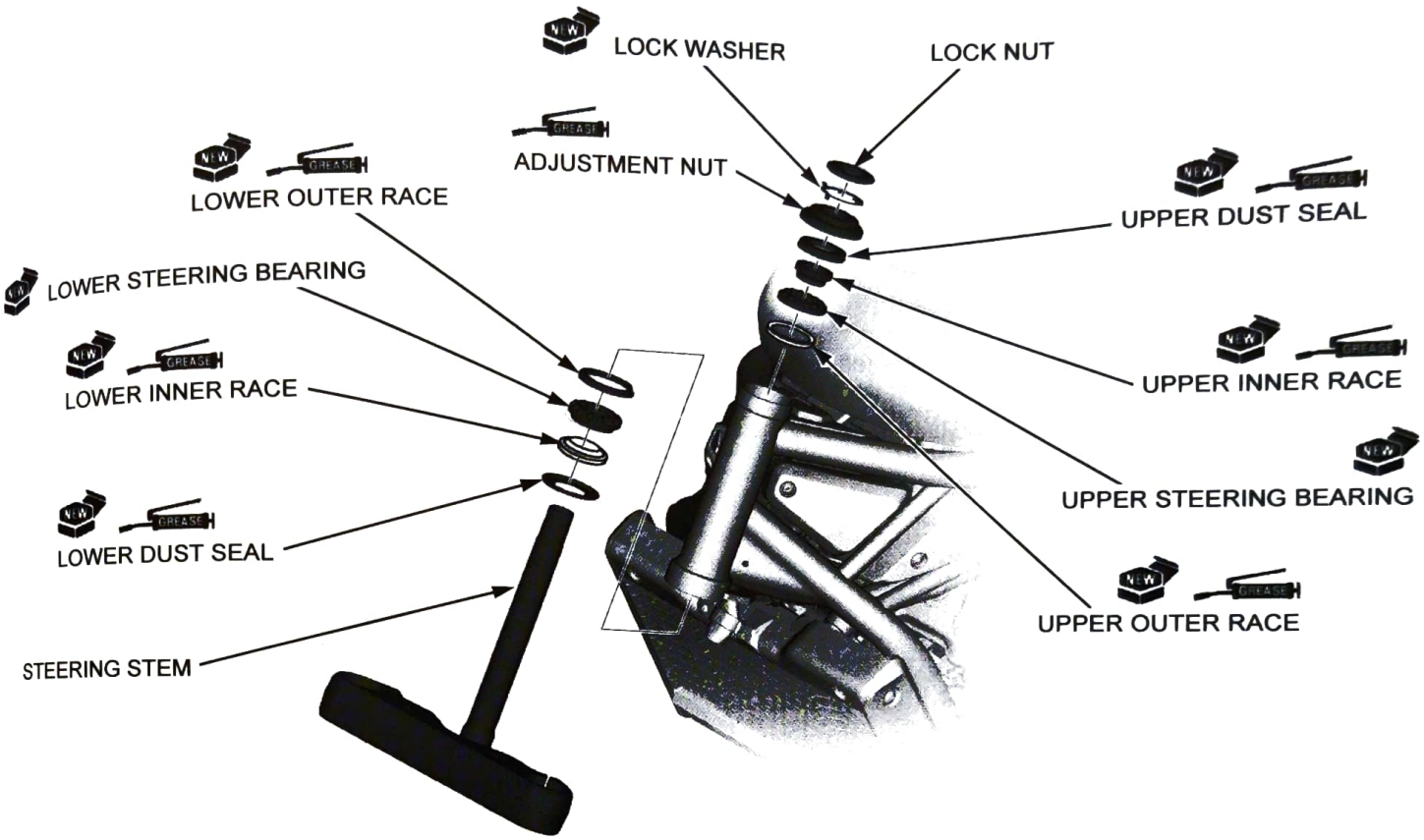

NOTE:

- Use urea based multi-purpose extreme pressure grease NLGI #2 (EXCELITE EP2 manufactured by KYODO YUSHI CO., LTD., STAMINA EP2 manufactured by Shell or equivalent) for the bearing race sliding surface and dust seals.

Apply grease to the lip of the lower dust seal [1].

Apply 3 – 5 g (0.1 – 0.2 oz) (per each bearing) of grease to the bearing race sliding surfaces.

Apply grease to the lip of a new upper dust seal [2].

Apply grease to the threads of the adjustment nut [3].

Install the following:

- Lower steering bearing [4]
- Upper steering bearing [5]
- Upper inner race [6]
- Steering stem [7]
- Upper dust seal
- Adjustment nuts

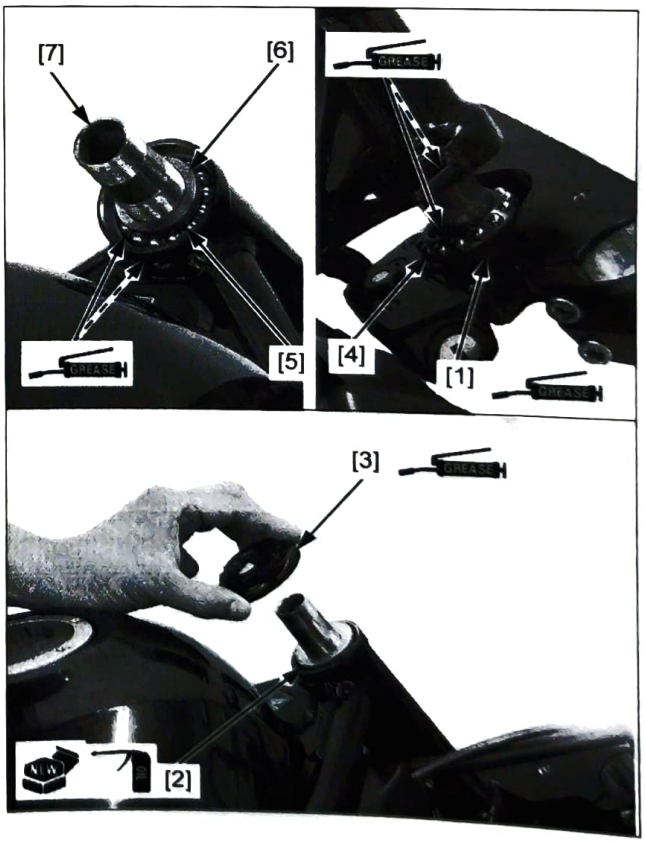

1. Tighten the adjustment nut [1] to the specified torque using the below special tool.

TOOL:
[2] Steering stem socket 07916-3710101

TORQUE: 30 N·m (3.1 kgf·m, 22 lbf·ft)

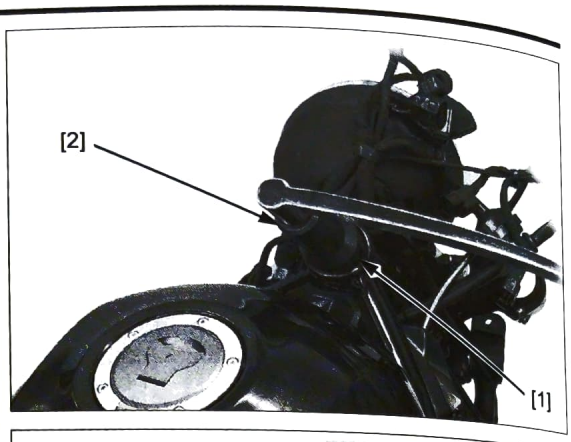

2. Turn the steering stem left and right, lock-to-lock at least five times to seat the bearings.
3. Retighten the adjustment nut to the same torque.

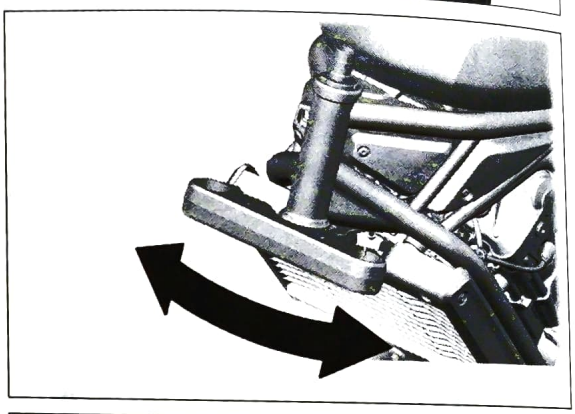

Install a new lock washer [1], aligning its bent tabs with the grooves in the adjustment nut.

Install the lock nut [2] and finger tighten it all the way.

Do not over tighten the lock nut, this will flatten the lock washer.

Further tighten the lock nut, within 90°, to align its grooves with the tabs of the lock washer.
Bend the lock washer tabs [3] up into the grooves in the lock nut.

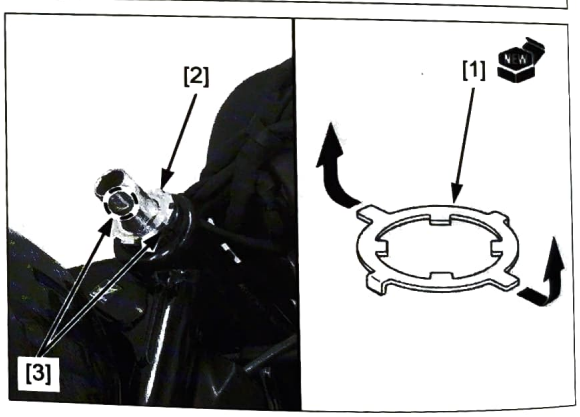

Clean the threads of the stem with a degreasing agent.

Install the top bridge [1], collar [2] and steering stem nut [3].

Do not tighten the top bridge pinch bolts [4].

Temporarily install the fork legs into the bottom and top bridges by tightening the bottom bridge pinch socket bolts.

Tighten the stem nut to the specified torque.

TORQUE: 103 N·m (10.5 kgf·m, 76 lbf·ft)

Make sure the steering stem moves smoothly, without play or binding.

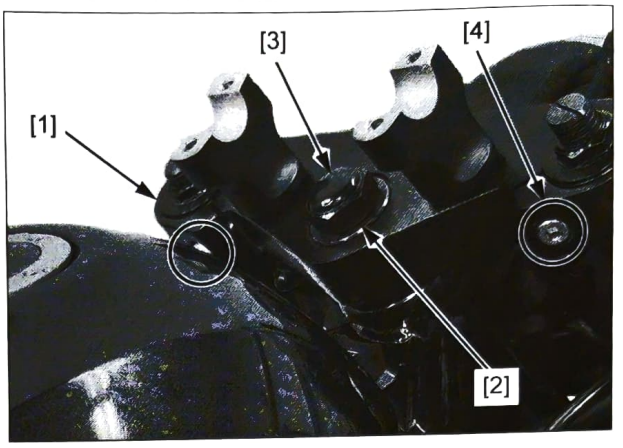

Install the following:

- Fork legs (page 17-18)
- Headlight bracket (page 22-4)
- Handlebar (page 17-6)

Install the harness stay [1] onto the bottom bridge and tighten the bolt [2].

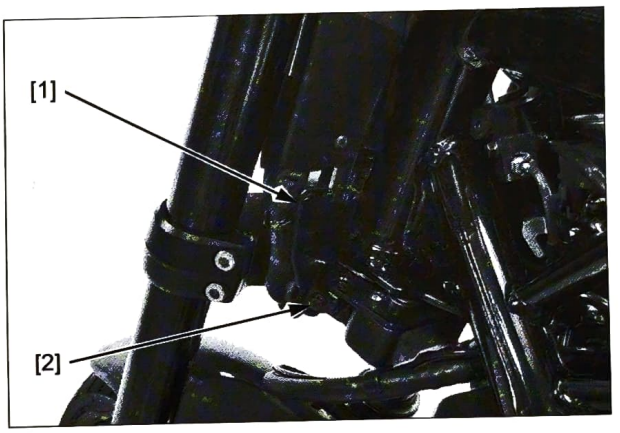

MEMO

18. REAR WHEEL/SUSPENSION

SERVICE INFORMATION 18-2

TROUBLESHOOTING 18-3

COMPONENT LOCATION 18-4

REAR WHEEL 18-5

SHOCK ABSORBER 18-8

SWINGARM 18-8

SERVICE INFORMATION

GENERAL

- When servicing the rear wheel and suspension, support the motorcycle using a safety stand or hoist.
- When using a safety stand, do not pinch the rear wheel speed sensor wire.
- A contaminated brake disc or pad reduces stopping power. Discard contaminated pads and clean a contaminated disc with a high quality brake degreasing agent.
- After the rear wheel installation, check the brake operation by applying the brake pedal.
- Use only tires marked "TUBELESS" and tubeless valves on rim marked "TUBELESS TIRE APPLICABLE".
- When using the pivot locknut wrench, use a 25 cm (9.8 in) long deflecting beam type torque wrench. The pivot locknut wrench increases the torque wrench's leverage, so the torque wrench reading will be less than the torque actually applied to the swingarm pivot locknut. The specification given on this page is actual torque applied to the swingarm pivot locknut, not the reading on the torque wrench when used with the pivot locknut wrench. The procedure later in the text gives the actual and indicated torque.
- Use genuine Honda replacement bolts and nuts for all suspension pivot and mounting point.
- For brake system information (page 19-2).

TOOLS

Bearing remover head, 20 mm 07746-0050600 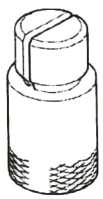	Bearing remover shaft 07GGD-0010100 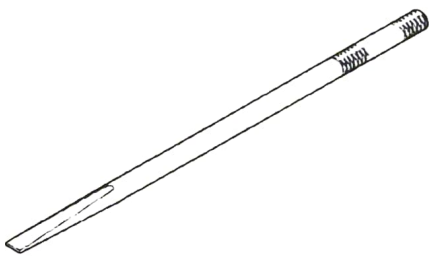	Driver 07749-0010000 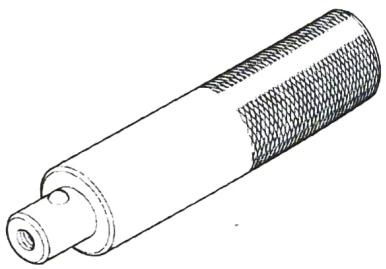
Attachment, 22 x 28 mm 07946-MJ00201 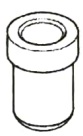	Attachment, 28 x 30 mm 07946-1870100 	Attachment, 32 x 35 mm 07746-0010100 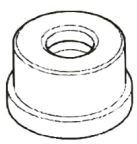
Attachment, 42 x 47 mm 07746-0010300 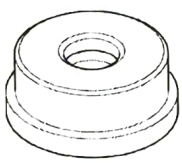	Attachment, 45 x 50 mm 07946-6920100 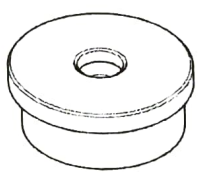	Driver shaft 07946-MJ00100 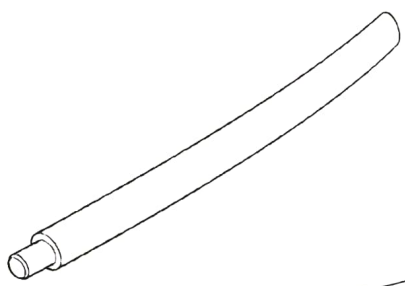

Pilot, 17 mm
07746-0040400



Pilot, 20 mm
07746-0040500



Pilot, 25 mm
07746-0040600



Remover attachment, 24 mm
07LMC-KV30200

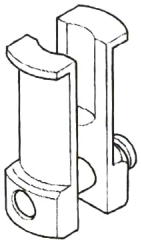

TROUBLESHOOTING

Steers to one side or does not track straight
- Drive chain adjusters not adjusted equally
- Bent axle
- Bent frame
- Worn swingarm pivot components

Rear wheel wobbling
- Bent rim
- Worn wheel bearing
- Worn driven flange bearing
- Faulty tire
- Bent frame or swingarm
- Axle not tightened properly
- Unbalanced tire and wheel
- Insufficient tire pressure

Wheel hard to turn
- Brake drag
- Faulty wheel bearing
- Faulty driven flange bearing
- Bent axle
- Drive chain too tight (page 3-17)

Soft suspension
- Weak shock absorber spring
- Oil leakage from damper unit
- Insufficient tire pressure

Stiff suspension
- Bent shock absorber damper rod
- Damaged suspension or swingarm pivot bushing
- Bent swingarm pivot or frame

Rear suspension noisy
- Loose suspension fasteners
- Faulty shock absorber

COMPONENT LOCATION

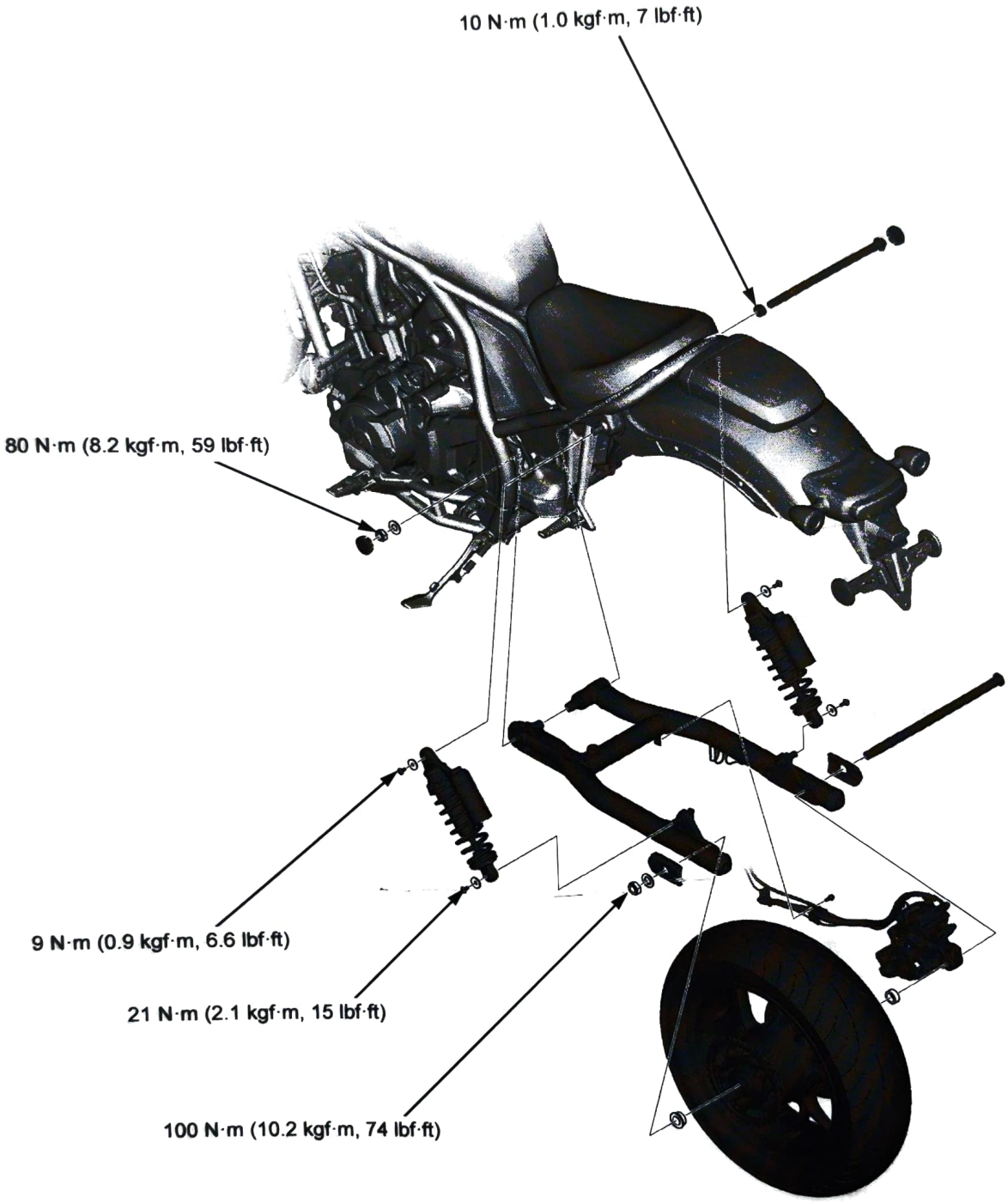

REAR WHEEL

MUFFLER ROTATING

Remove the following:

- Right passenger footpeg (page 2-16)
- Muffler cover (page 2-16)

Loosen the muffler band bolts [1] and rotate the muffler [2] outward as shown.

Install the removed parts in the reverse order of removal.

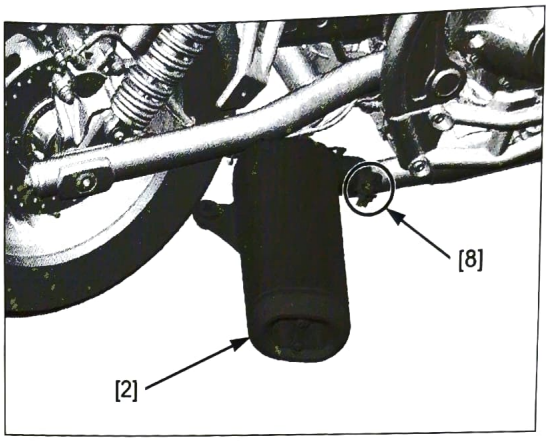

REMOVAL/INSTALLATION

Rotate the muffler (page 18-5).

Loosen the axle nut [1].

Support the motorcycle using a hoist or equivalent and raise the rear wheel off the ground.

Loosen the chain adjusters [2] so the wheel can be moved forward all the way.

Push the rear wheel forward and derail the drive chain [3] from the driven sprocket.

Support the caliper so it does not hang from the brake hose. Do not twist the brake hose and rear wheel speed sensor wire.

Remove the following:

- Axle nut
- Left setting plate [4]
- Axle [5]
- Right setting plate [6]
- Rear wheel
- Rear brake caliper [7] (from the swingarm boss [8])
- Chain adjusters [9]

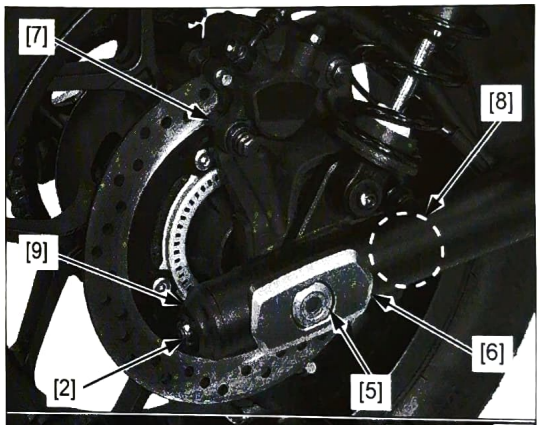

NOTE:

- Do not operate the brake pedal after removing the wheel.

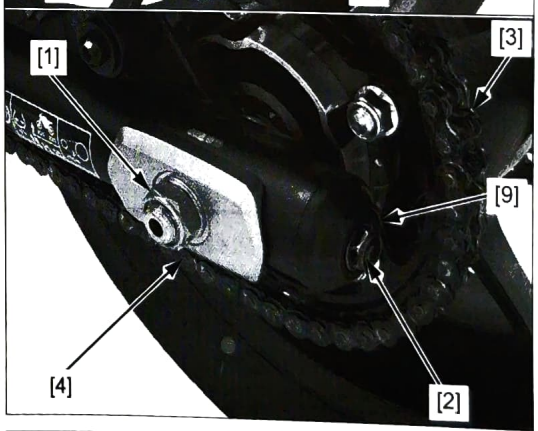

Remove the following:

- Left side collar (flange) [1]
- Right side collar [2]

Installation is in the reverse order of removal.

Adjust the drive chain slack (page 3-17).

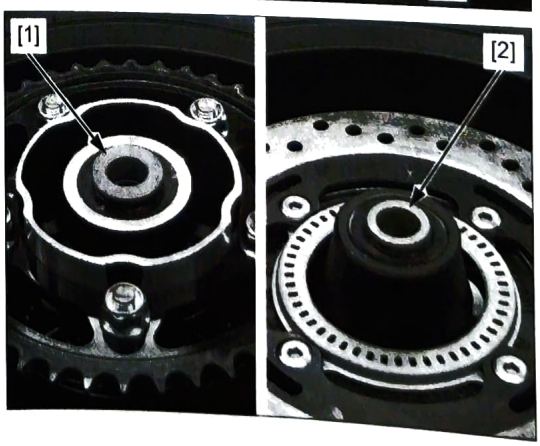

INSPECTION

Turn the inner race of each bearing with your finger. The bearings should turn smoothly and quietly. Also check that the bearing outer race fits tightly in the hub.

Replace the bearings if they do not turn smoothly, quietly, or if they fit loosely in the hub.

Inspect the following parts for damage, abnormal wear, deformation or bend.

- Rear axle
- Wheel rim
- Driven sprocket (page 3-19)
- Damper rubbers (page 18-6)

Measure each part according to REAR WHEEL/ SUSPENSION SPECIFICATIONS (page 1-9).

Replace any part if it is out of service limit.

DISASSEMBLY/ASSEMBLY

Disassemble and assemble the rear wheel as shown in the following illustration.

- For wheel balance service (page 17-16).
- Install each dust seal with the flat side facing out so that it is flush with the hub and driven flange end surfaces.
- Install the brake disc with the rotation mark (arrow) facing out.
- Install the driven sprocket with the stepped surface facing out.
- Apply locking agent to the driven sprocket stud bolt threads (driven flange side).

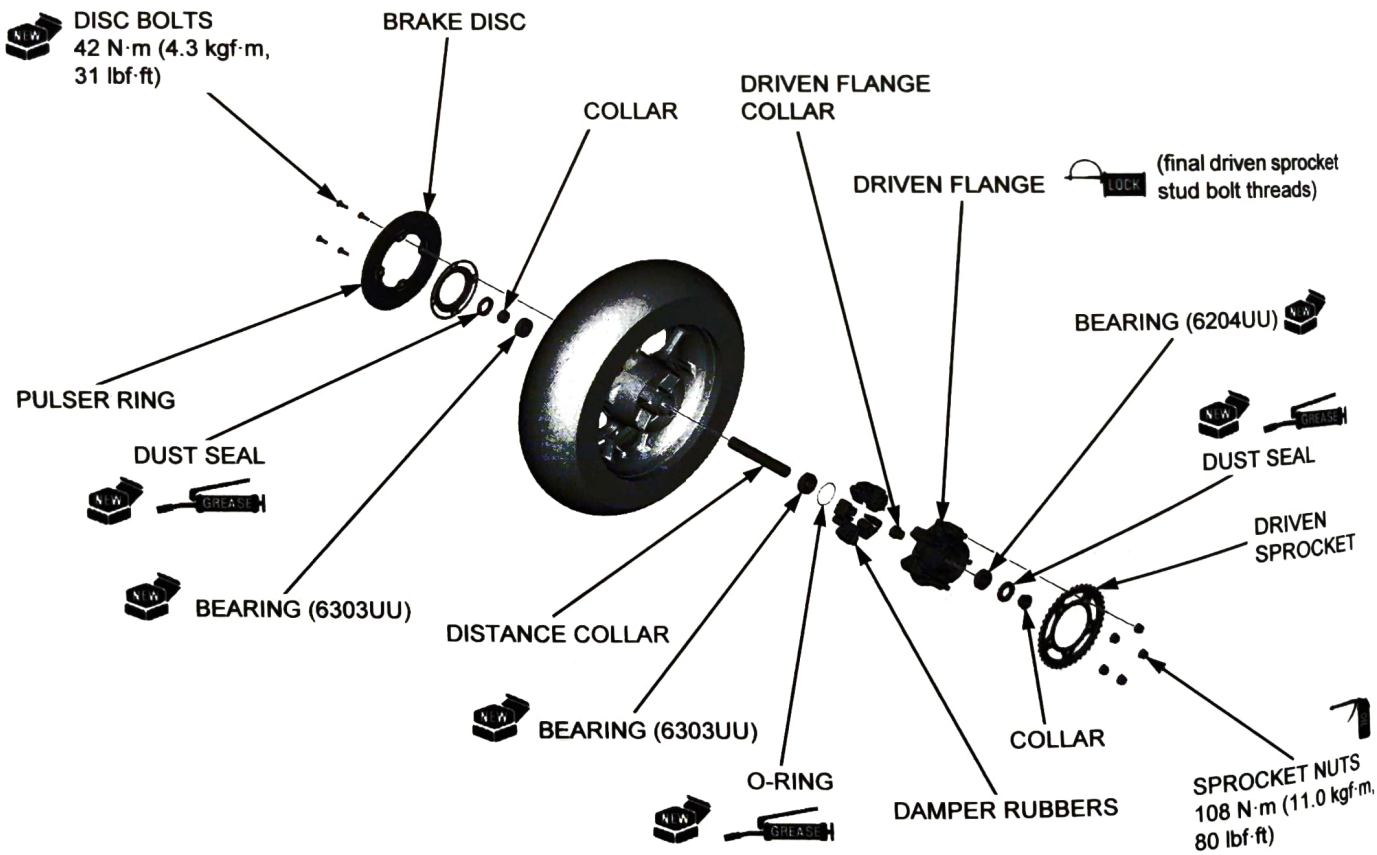

BEARING REPLACEMENT

WHEEL BEARING

Install the bearing remover head [1] into the bearing.

From the opposite side of the wheel, install the bearing remover shaft [2] and drive the bearing out of the wheel hub with the below special tools.

TOOLS:

Bearing remover head, 20 mm	**07746-0050600**
Bearing remover shaft	**07GGD-0010100**

Remove the distance collar and drive out the other bearing.

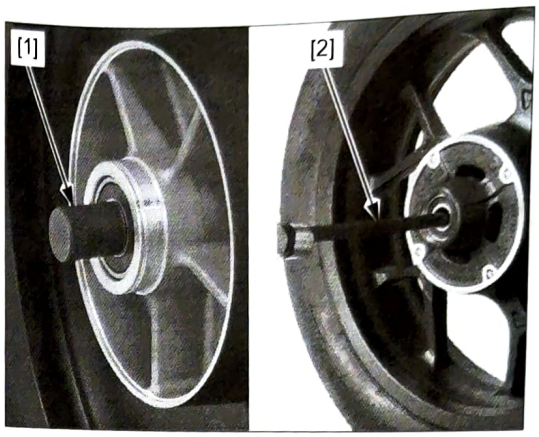

Drive in a new right side bearing (brake disc side) squarely with the marked side facing up until it is fully seated.

Install the distance collar.

Drive in a new left side bearing squarely with the marked side facing up until it is fully seated with the below special tools.

TOOLS:

[1] Driver	**07749-0010000**
[2] Attachment, 42 x 47 mm	**07746-0010300**
[3] Pilot, 17 mm	**07746-0040400**

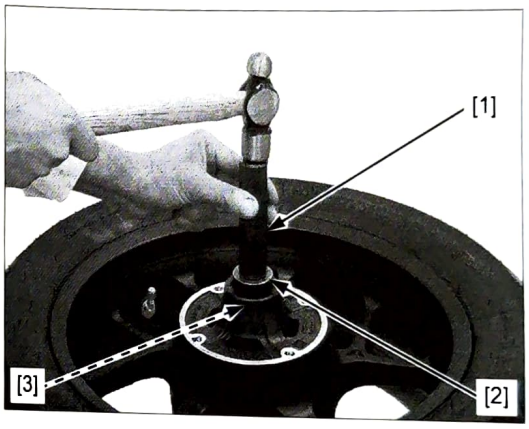

DRIVEN FLANGE BEARING

Drive out the driven flange collar [1] and the bearing [2].

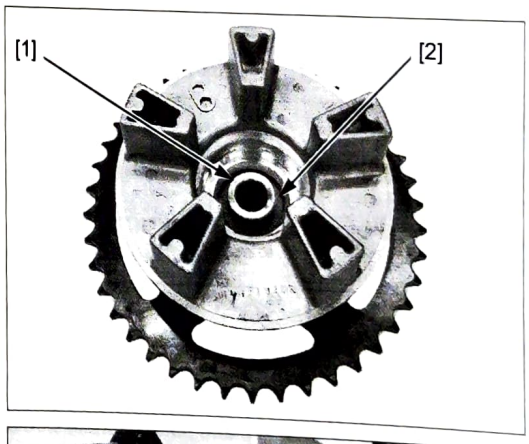

Place a new bearing [1] with the marked side facing down. Install the driven flange collar [2] into the bearing until it is fully seated with the below special tools.

TOOLS:

[3] Driver	**07749-0010000**
[4] Attachment, 28 x 30 mm	**07946-1870100**
[5] Pilot, 20 mm	**07746-0040500**

Drive in the driven flange bearing/collar squarely with the collar side facing down until it is fully seated with the below special tools.

TOOLS:

[6] Driver	**07749-0010000**
[7] Attachment, 45 x 50 mm	**07946-6920100**
[8] Pilot, 20 mm	**07746-0040500**

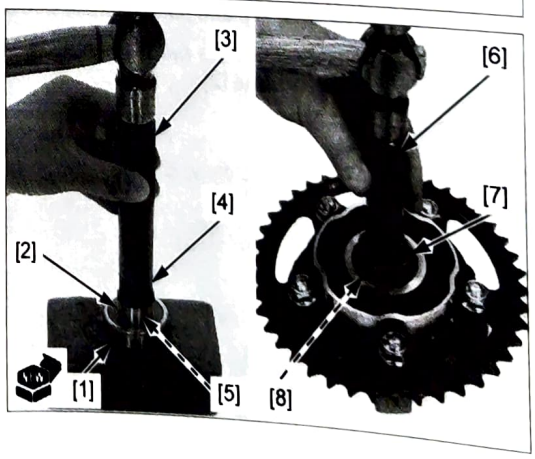

SHOCK ABSORBER

REMOVAL/INSTALLATION

Rotate the muffler (page 18-5).

Support the motorcycle using a hoist or equivalent and raise the rear wheel off the ground.

Remove the following:

- Shock absorber upper mounting socket bolt [1]
- Washer [2]
- Shock absorber lower mounting socket bolt [3]
- Washer [4]
- Shock absorber [5]

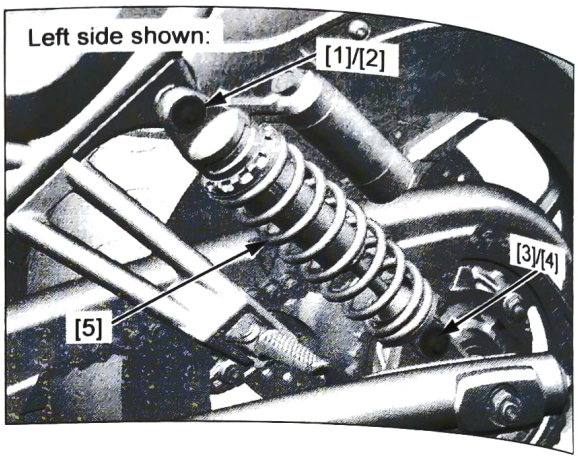

Installation is in the reverse order of removal.

TORQUE:

Shock absorber upper mounting socket bolt:
9 N·m (0.9 kgf·m, 6.6 lbf·ft)

Shock absorber lower mounting socket bolt:
21 N·m (2.1 kgf·m, 15 lbf·ft)

INSPECTION

Inspect the following parts of the shock absorber for damage, abnormal wear, oil leakage or bend.

- Damper unit
- Pivot bushing

SWINGARM

REMOVAL

Support the motorcycle using a hoist or equivalent and raise the rear wheel off the ground.

Drain the brake fluid from the rear brake hydraulic system (page 19-5).

When removing the oil bolt, cover the end of brake hose to prevent contamination.

Remove the following:

- Drive chain cover (page 2-9)
- Rear wheel (page 18-5)
- Shock absorber (page 18-8)
- Oil bolt [1]
- Sealing washers [2]
- Rear wheel speed sensor mounting bolt [3]
- Clip [4]
- Parking brake wire (DCT type) [5]
- Clamp bolt [6]
- Bolt [7]

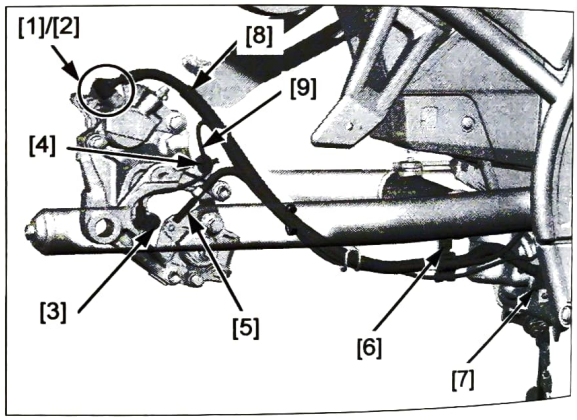

Remove the brake hose [8], rear wheel speed sensor wire [9], and parking brake wire out of the swingarm.

Remove the swingarm pivot caps [1] and the swingarm pivot nut [2].

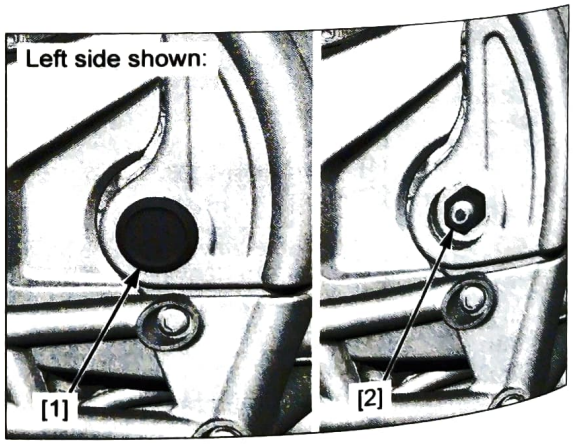

Remove the swingarm pivot bolt [1], swingarm adjuster bolt [2] and swingarm [3].

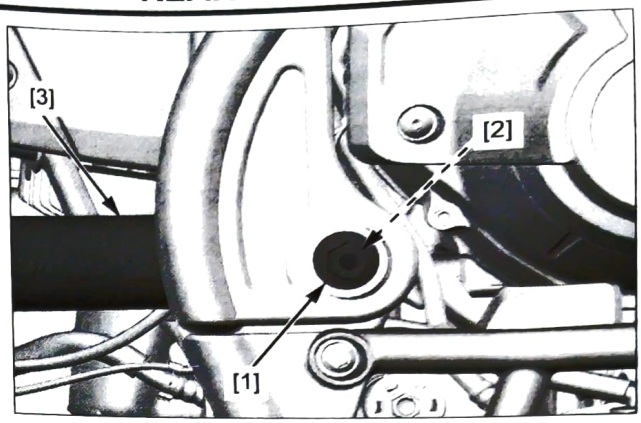

DISASSEMBLY/ASSEMBLY

- Install each dust seal with the flat side facing out so that it is flush with the pivot end surface.

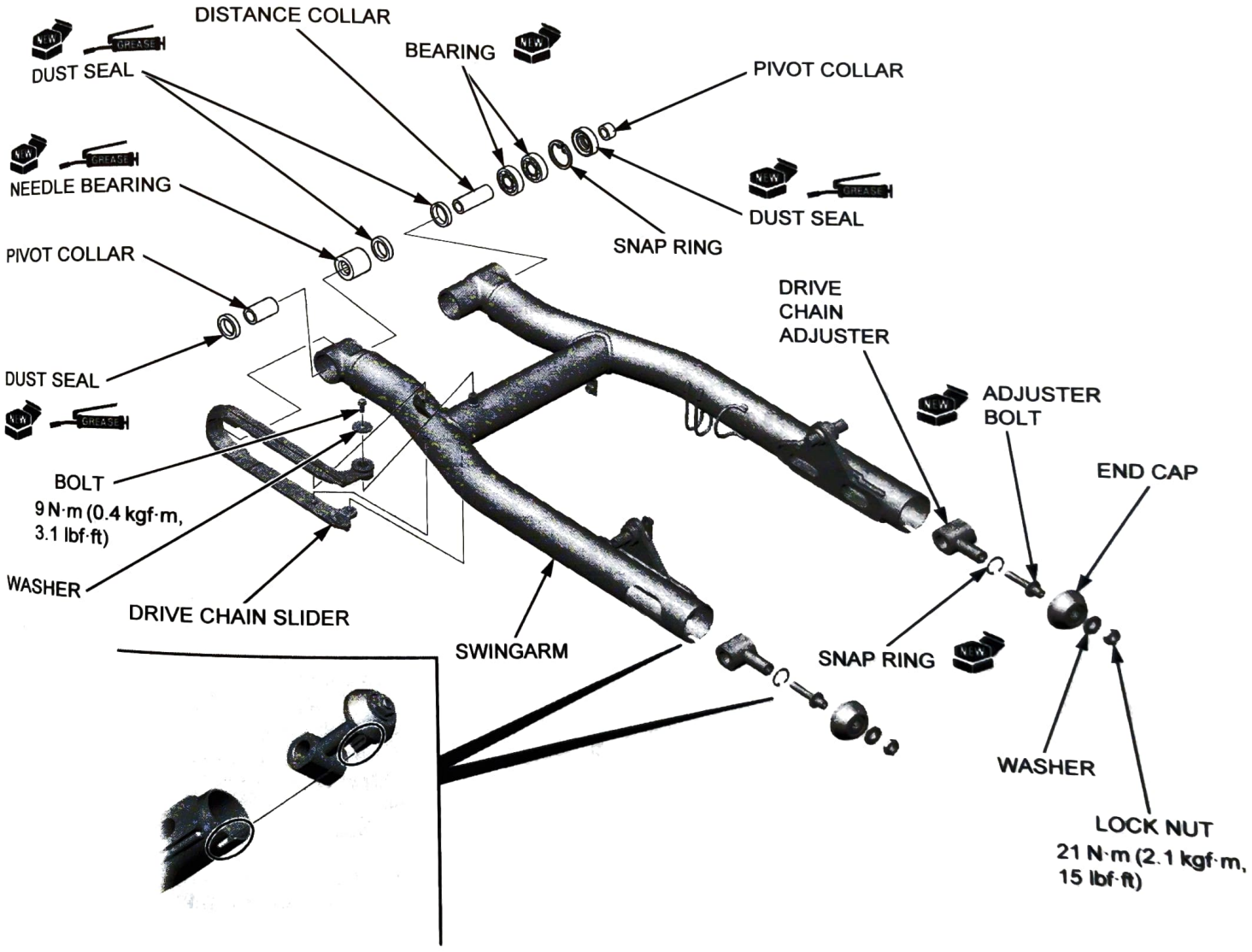

Check the collars for wear, damage or fatigue.

Check the needle bearing for damage or loose fit, replace it if necessary (page 18-11).

Install the dust seals until it is flush with the pivot end surface.

INSPECTION

Inspect the following parts for damage, abnormal wear, or deformation and replace if necessary.

- Dust seals
- Pivot collars
- Swingarm
- Bearings
- Drive chain slider

INSTALLATION

Install the swingarm [1].

Install the swingarm pivot adjusting bolt [2] so that bolt end does not protrude out of inner surface of the frame.

Install and tighten the swingarm pivot bolt [3] to the specified torque.

NOTE:

- Install swingarm pivot bolt and fit hex portion securely.

TORQUE:
Swingarm adjust bolt:
10 N·m (1.0 kgf·m, 7 lbf·ft)

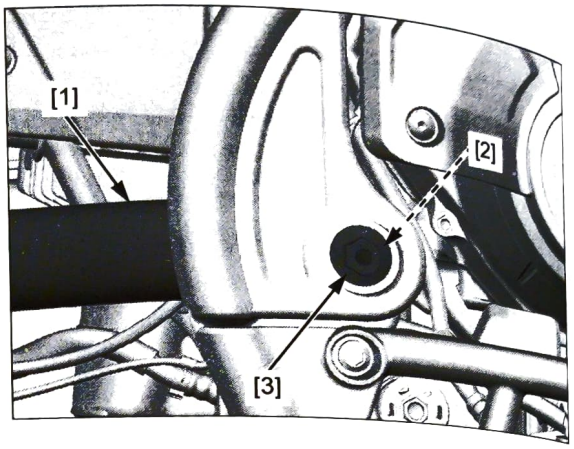

Apply engine oil to the swingarm pivot nut [1].

Install the swingarm pivot lock nut.

Tighten the swingarm pivot lock nut to the specified torque while holding the pivot bolt.

TORQUE:
Swingarm pivot nut:
80 N·m (8.2 kgf·m, 59 lbf·ft)

Install the swingarm pivot caps [1].

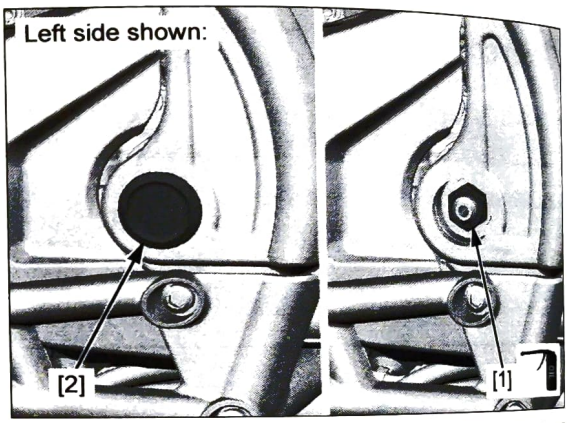

Install the following:

- Bolt [1]
- Clamp bolt [2]
- Parking brake wire (DCT type) [3]
- Clip [4]
- Rear wheel speed sensor wire [5]
- Rear wheel speed sensor mounting bolt [6]
- Brake hose [7]
- Sealing washers [8]
- Oil bolt [9]
- Shock absorber (page 18-8)
- Rear wheel (page 18-5)
- Drive chain cover (page 2-9)

TORQUE:
Oil bolt:
34 N·m (3.5 kgf·m, 25 lbf·ft)

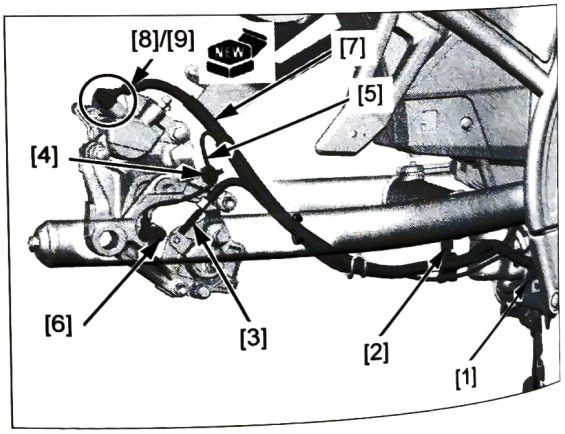

Fill and bleed the rear brake hydraulic system (page 19-6).

NOTE:

- Replace the sealing washers with new ones.

PIVOT BEARING REPLACEMENT

Right

Remove the pivot collar [1], the dust seal [2], and the distance collar [3].

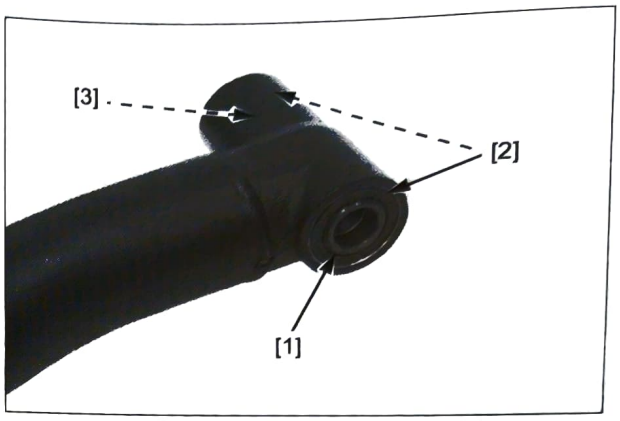

Remove the snap ring [1].

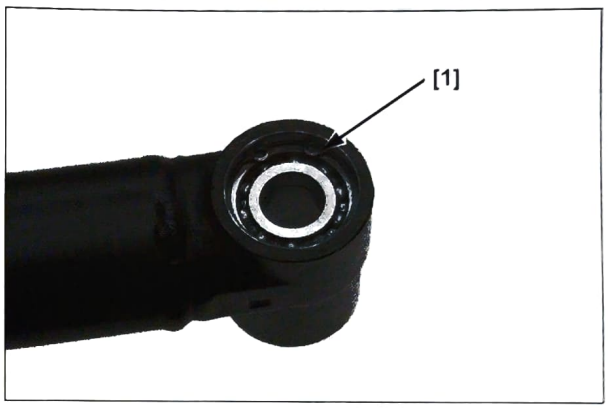

Drive the ball bearings [1] out of the swingarm using a hydraulic press and below special tools.

TOOL:

Driver shaft [2]	**07946-MJ00100**
Attachment, 22 x 28 mm [3]	**07946-MJ00201**

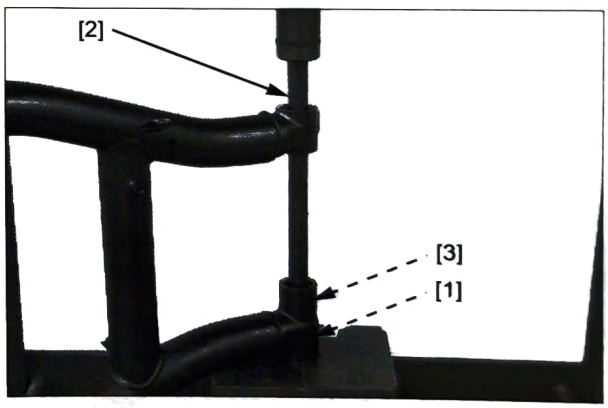

Install new ball bearings [1] into the swingarm with the marked side facing out until they are fully seated with the below special tools.

TOOLS:

Driver [2]	**07749-0010000**
Attachment, 32 x 35 mm [3]	**07746-0010100**
Pilot, 17 mm [4]	**07746-0040400**

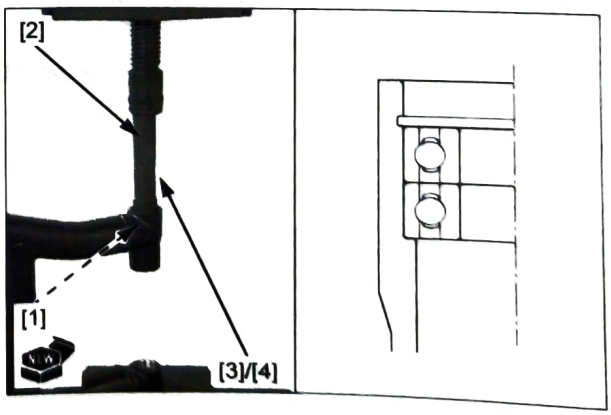

Install the new snap ring [1] into the groove securely.

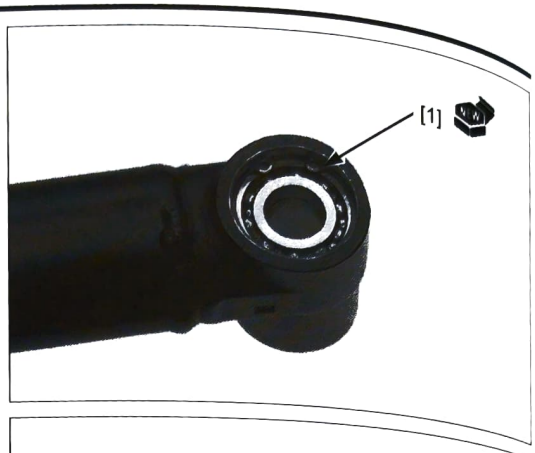

Apply grease to the new dust seal lips [1].

Install the distance collar [2], the new dust seal, and the pivot collar [3].

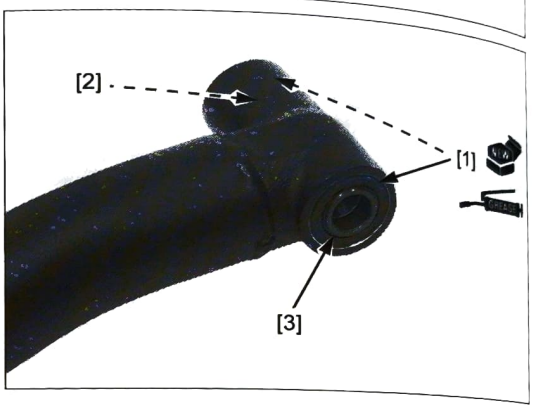

Left

Remove the pivot collar [1] and the dust seal [2].

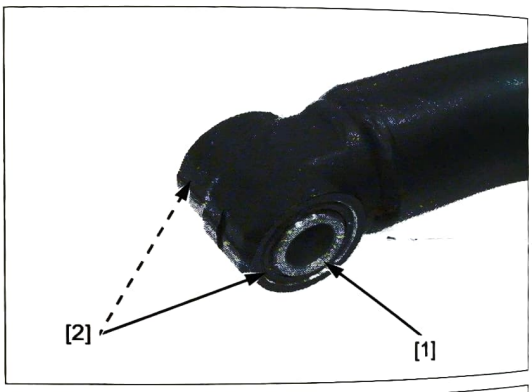

Drive the needle bearing [1] out of the swingarm using a hydraulic press and below special tools.

TOOLS:

Remover attachment, 24 mm [2]	**07LMC-KV30200**
Driver shaft [3]	**07946-MJ00100**

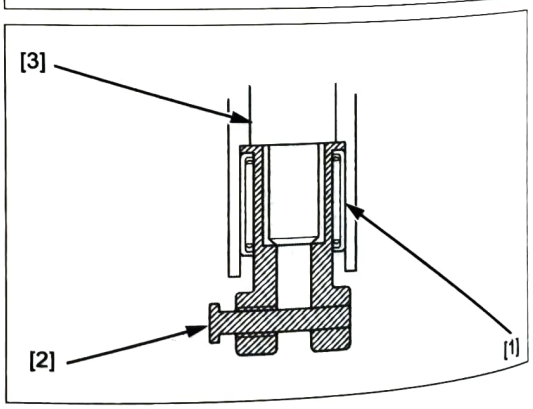

Apply grease to a new needle bearing rotating area.

Carefully press the bearing in the left pivot with the marked side facing up until the depth from the pivot end surface is 5.0 – 5.5 mm (0.20 – 0.22 in), using the below special tools.

TOOLS:

Driver [2]	**07749-0010000**
Attachment, 32 x 35 mm [3]	**07746-0010100**
Pilot, 25 mm [4]	**07746-0040600**

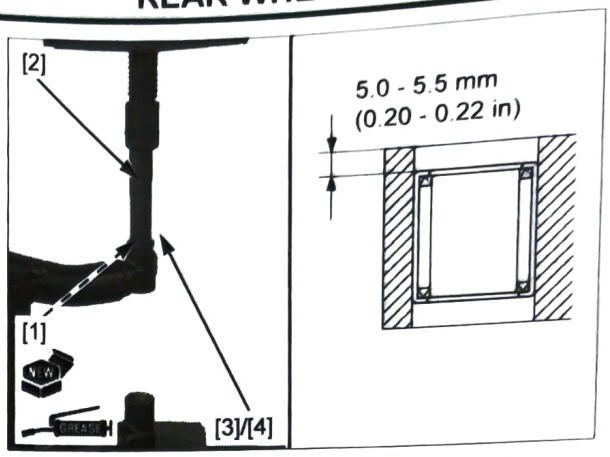

Apply grease to the new dust seal lips [1].

Install the new dust seal and the pivot collar [2].

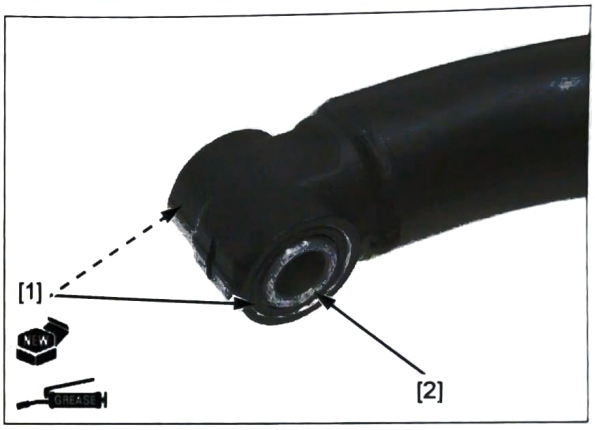

MEMO

19. HYDRAULIC BRAKE

SERVICE INFORMATION 19-2

TROUBLESHOOTING 19-2

COMPONENT LOCATION 19-3

BRAKE FLUID REPLACEMENT/ AIR BLEEDING 19-5

BRAKE PAD/DISC 19-7

FRONT MASTER CYLINDER 19-11

REAR MASTER CYLINDER 19-13

FRONT BRAKE CALIPER 19-15

REAR BRAKE CALIPER 19-17

BRAKE PEDAL 19-19

PARKING BRAKE LEVER (DCT type) 19-20

PARKING BRAKE CALIPER (DCT type) 19-23

SERVICE INFORMATION

GENERAL

⚠CAUTION

Frequent inhalation of brake pad dust, regardless of material composition, could be hazardous to your health.
- Avoid breathing dust particles.
- Never use an air hose or brush to clean brake assemblies. Use an OSHA-approved vacuum cleaner.

NOTICE

Spilling brake fluid will severely damage instrument lenses and painted surfaces. It is also harmful to some rubber parts. Be careful whenever you remove the reservoir cover; make sure the front, left handlebar, reservoir is level first.

- This section covers service of the conventional brake components of the brake system. For Anti-lock Brake System (ABS) service (page 20-2).
- This models is equipped with the ABS, however, the brake fluid replacement procedure is performed in the same manner as in an ordinary air bleeding procedure. Note that replacement and bleeding air from the brake fluid in the ABS modulator is not necessary, as it is sealed in the modulator.
- A contaminated brake disc or pad reduces stopping power. Discard contaminated pads and clean a contaminated disc with a high quality brake degreasing agent.
- Always use fresh DOT 4 brake fluid from a sealed container when servicing the system. Do not mix different types of fluid, they may not be compatible.
- Never allow contaminates (dirt, water, etc.) to get into an open reservoir.
- Once the hydraulic system has been opened, or if the brake feels spongy, the system must be bled.
- Always check brake operation before riding the motorcycle.
- When the wheel speed sensor is removed, be sure to check the air gap between the wheel caliper bracket and pulser ring after installing it (page 20-22).

TROUBLESHOOTING

Brake lever/pedal soft or spongy
- Air in hydraulic system
- Leaking hydraulic system
- Contaminated brake pad/disc
- Worn caliper piston seal
- Worn master piston cups
- Worn brake pad/disc
- Contaminated caliper
- Contaminated master cylinder
- Caliper not sliding properly
- Low brake fluid level
- Clogged fluid passage
- Warped/deformed brake disc
- Sticking/worn caliper piston
- Sticking/worn master piston
- Bent brake lever/pedal

Brake lever/pedal hard
- Clogged/restricted fluid passage
- Sticking/worn caliper piston
- Caliper not sliding properly
- Worn caliper piston seal
- Sticking/worn master piston
- Bent brake lever/pedal

Brake drags
- Contaminated brake pad/disc
- Misaligned wheel
- Badly worn brake pad/disc
- Warped/deformed brake disc
- Caliper not sliding properly
- Clogged/restricted fluid passage
- Sticking caliper piston

COMPONENT LOCATION

FRONT:

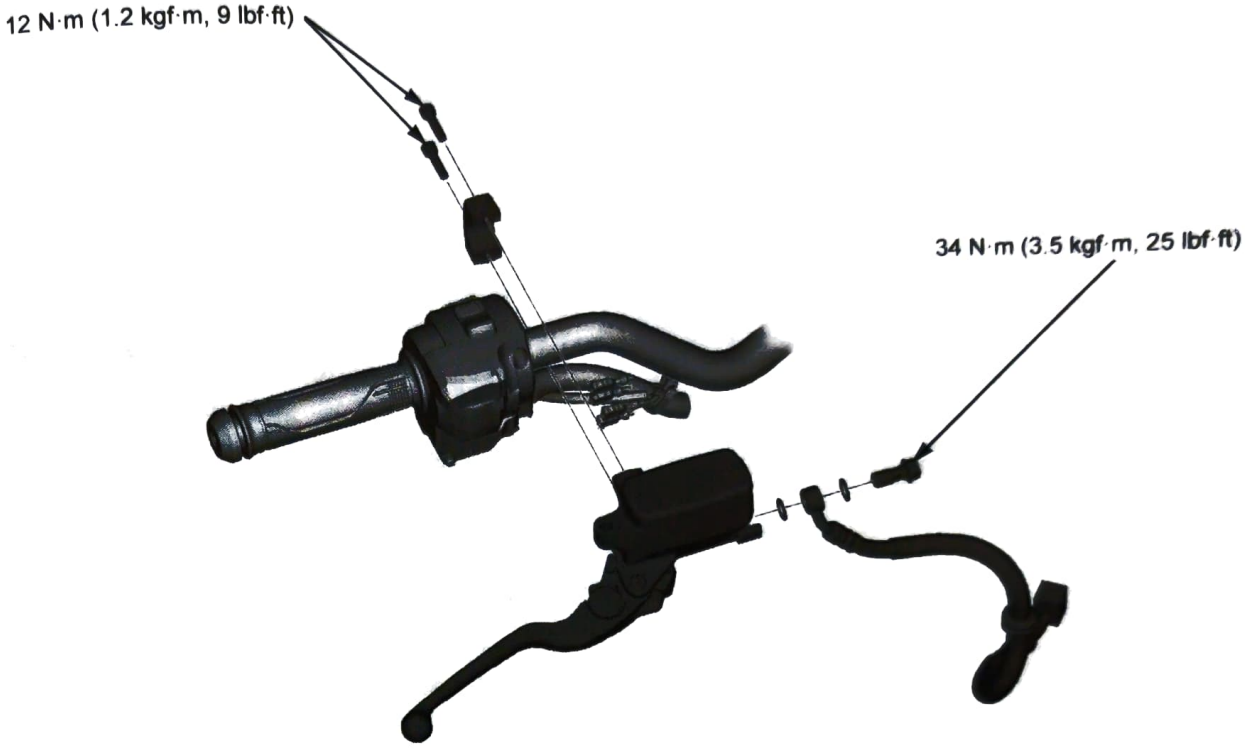

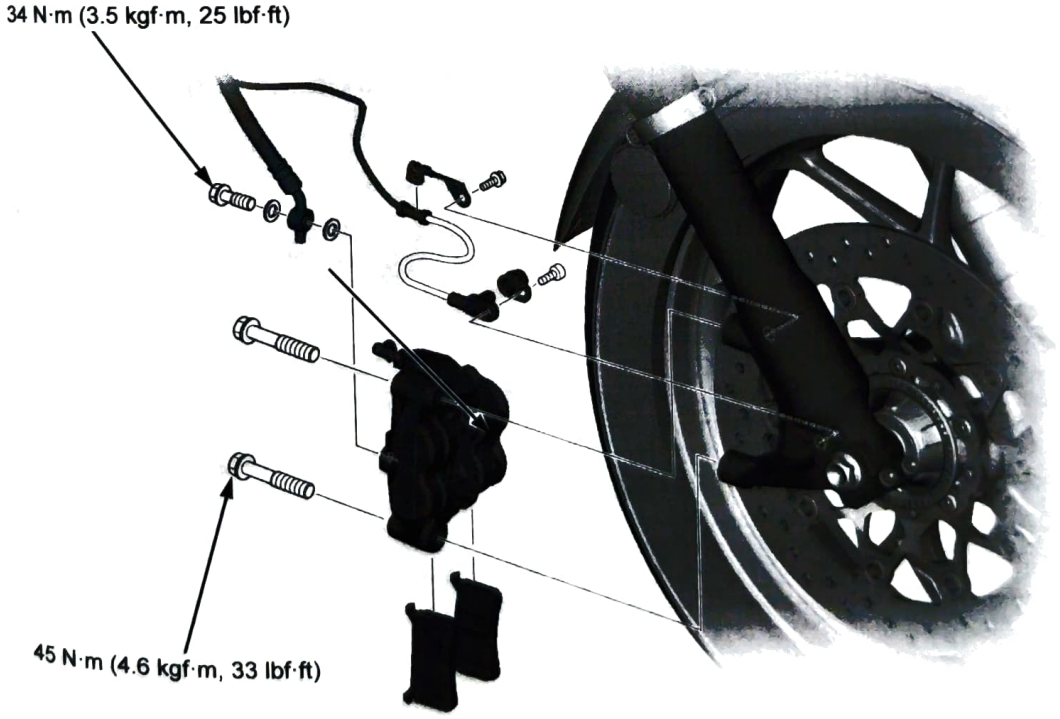

REAR:

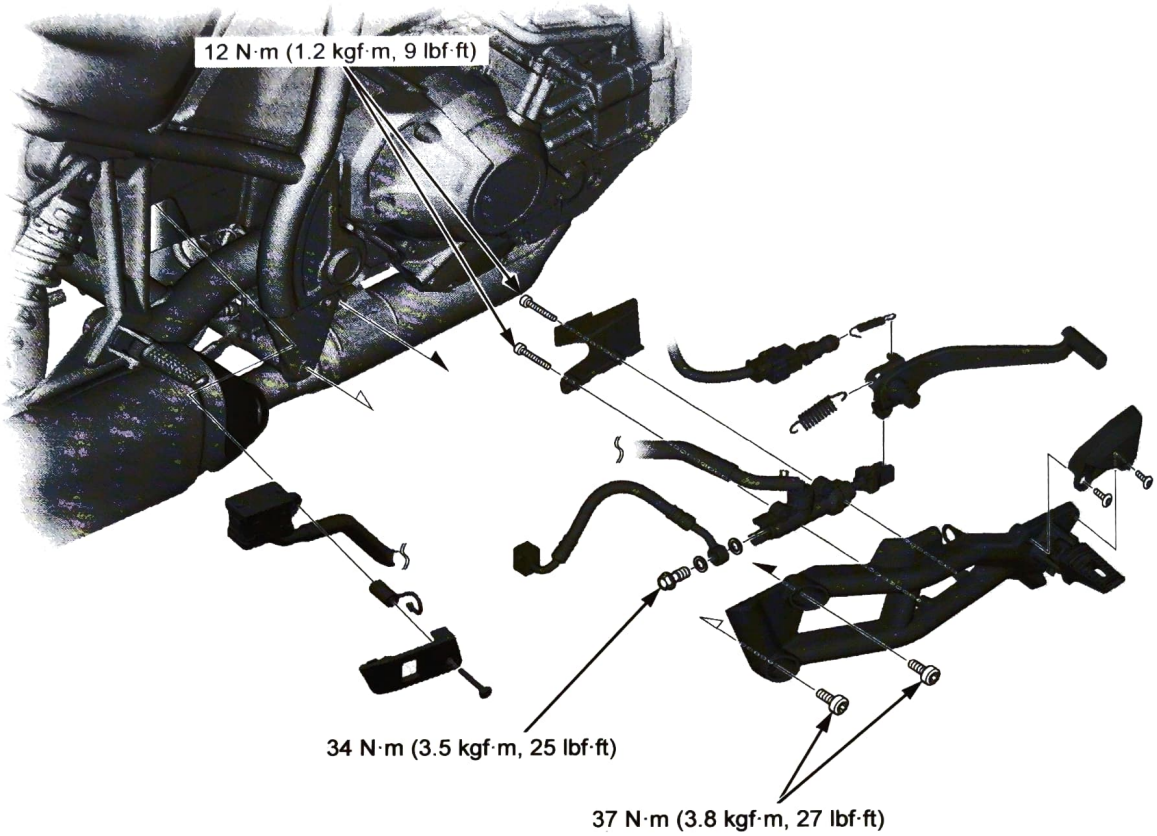
12 N·m (1.2 kgf·m, 9 lbf·ft)
34 N·m (3.5 kgf·m, 25 lbf·ft)
37 N·m (3.8 kgf·m, 27 lbf·ft)

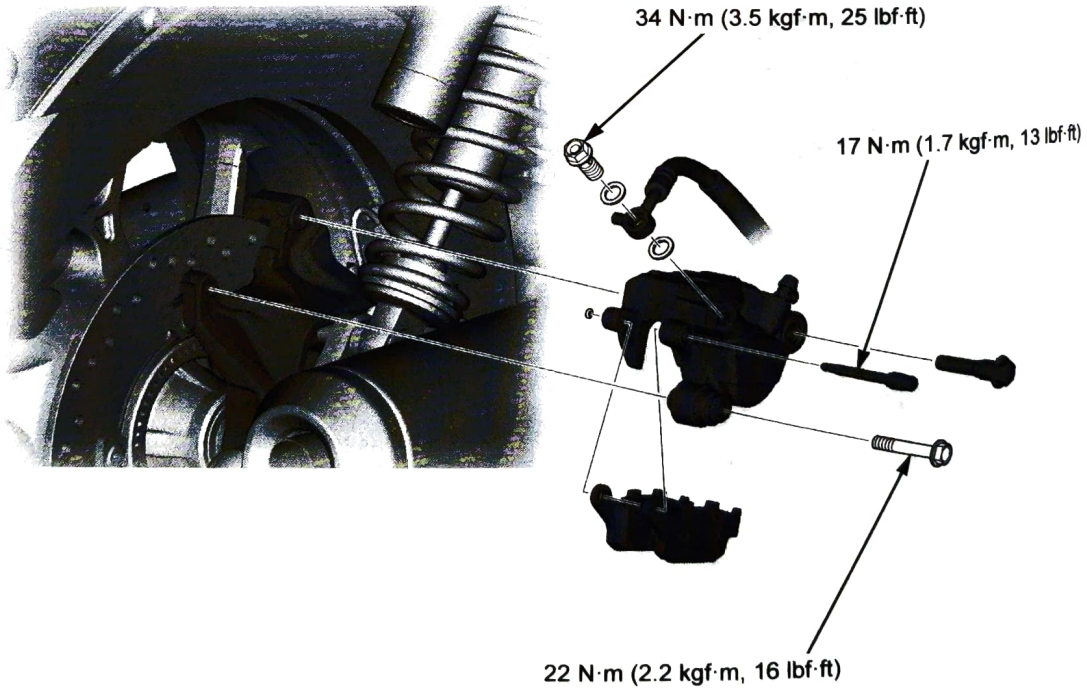
34 N·m (3.5 kgf·m, 25 lbf·ft)
17 N·m (1.7 kgf·m, 13 lbf·ft)
22 N·m (2.2 kgf·m, 16 lbf·ft)

BRAKE FLUID REPLACEMENT/AIR BLEEDING

BRAKE FLUID DRAINING

For front brake:

Turn the handlebar so the reservoir is level.

Remove the following:

- two screws [1]
- reservoir cap [2]
- set plate [3]
- diaphragm [4]
- float [5]

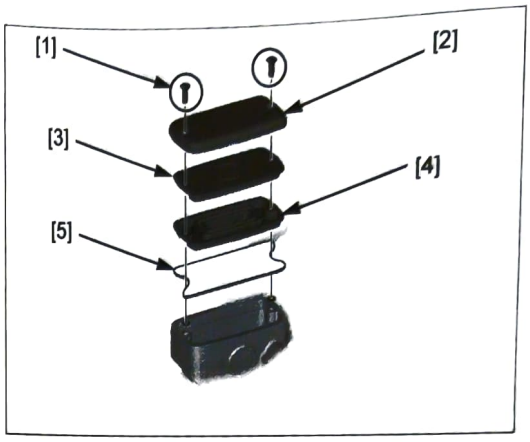

Take care not to spill the fluid out of the reservoir.

Remove the following:

- reservoir mounting socket bolt [1]
- reservoir cover [2]
- brake hose stay [3]
- two screws [4]
- reservoir cap [5]
- set plate [6]
- diaphragm [7]

Temporarily install the reservoir [8] onto the battery case with the mounting bolt secure it so the reservoir is level.

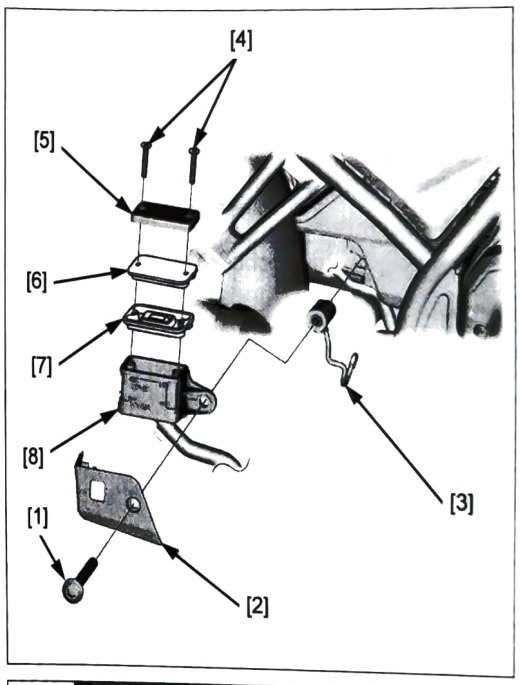

Connect a bleed hose [1] to the caliper bleed valve [2].

Loosen the bleed valve and pump the brake lever or pedal until no more fluid flows out of the bleed valve.

Close the bleed valve.

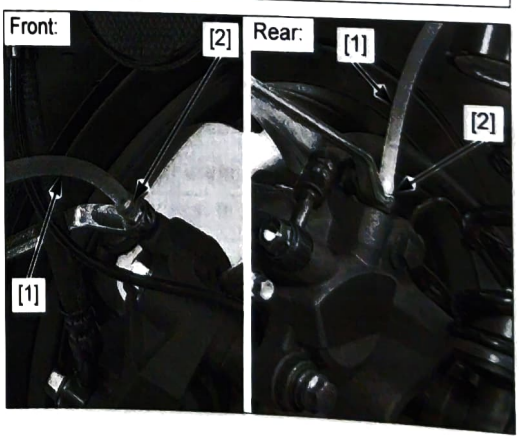

BRAKE FLUID FILLING/AIR BLEEDING

Fill the reservoir to the upper level line [1] with DOT 4 brake fluid from a sealed container.

Connect a commercially available brake bleeder to the bleed valve.

Operate the brake bleeder and loosen the bleed valve.

Check the fluid level often while bleeding to prevent air from being pumped into the system.

If an automatic refill system is not used, add fluid when the fluid level in the reservoir is low.

Perform the bleeding procedure until the system is completely flushed/bled.

Close the bleed valve and operate the brake lever or pedal. If it still feels spongy, bleed the system again.

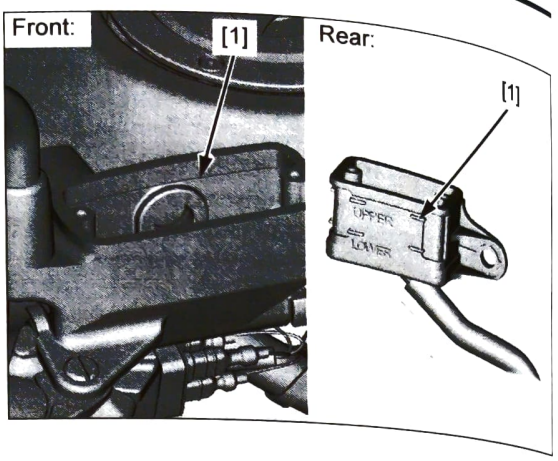

If the brake bleeder is not available, use the following procedure.

Connect a bleed hose to the bleed valve.

Pump up the system pressure with the brake lever/ pedal until the lever/pedal resistance is felt.

Do not release the brake lever or pedal until the bleed valve has been closed.

1. Squeeze the brake lever or depress the brake pedal all the way, and loosen the bleed valve 1/4 of a turn. Wait several seconds and then close it.
2. Release the brake lever/pedal slowly and wait several seconds after it reaches the end of its travel.
3. Repeat the steps 1 and 2 until there are no air bubbles in the bleed hose.

After bleeding the system completely, tighten the bleed valve to the specified torque.

TORQUE:
FRONT: 7.8 N·m (0.8 kgf·m, 5.8 lbf·ft)
REAR: 5.4 N·m (0.6 kgf·m, 4.0 lbf·ft)

Fill the reservoir to the upper level line with DOT 4 brake fluid.

For front brake:

Install the diaphragm, float, set plate, reservoir cap and tighten the screws to the specified torque.

TORQUE: 1.5 N·m (0.2 kgf·m, 1.1 lbf·ft)

For rear brake:

Carefully remove the reservoir [1] from the battery case by removing the mounting socket bolt [2].

Take care not to spill the fluid out of the reservoir.

Install the diaphragm [3], set plate [4], reservoir cap [5] and tighten the screws [6] to the specified torque.

TORQUE: 1.5 N·m (0.2 kgf·m, 1.1 lbf·ft)

Set the brake hose stay [7] to the brake hose.

Install the reservoir, cover [8] and tighten the mounting bolt.

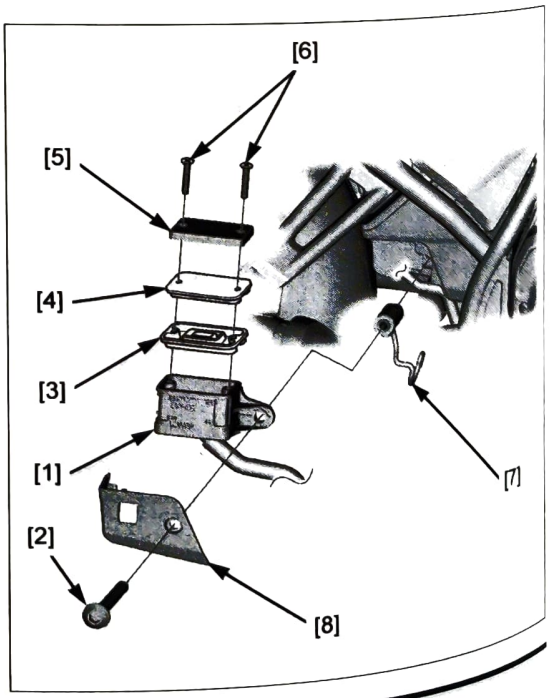

BRAKE PAD/DISC

BRAKE PAD REMOVAL/INSTALLATION

NOTE:

- Always replace the brake pads in pairs to ensure even disc pressure.

Check the fluid level in the reservoir as this operation causes the fluid level to rise.

FRONT

Remove the front brake caliper mounting bolts [1] and front brake calipers [2].

NOTE:

- Do not operate the brake lever after removing the front brake calipers.

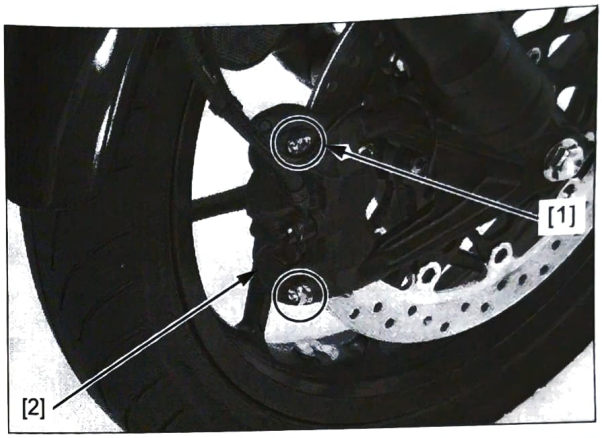

Push the caliper pistons all the way in by pushing the brake pads [1] outward.

NOTE:

- Check the fluid level in the reservoir as this operation causes the fluid level to rise.

Remove brake pad [2] to move to the center.

Remove brake pad [3] to move to the center.

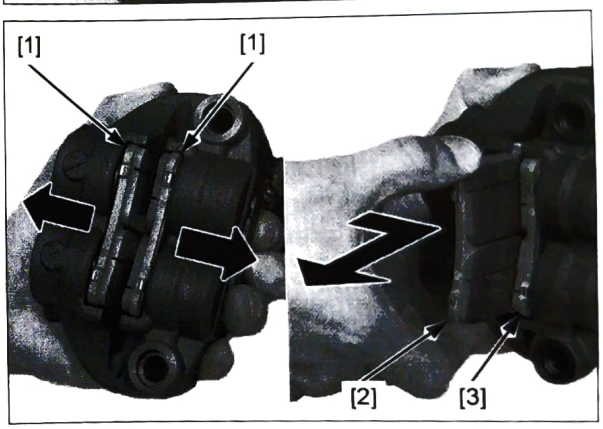

Clean the inside of the caliper especially around the caliper pistons.

Make sure that the caliper pistons are completely pushed back.

Install brake pad [1] by pushing the pad against the pad spring and move to the outside.
Install brake pad [2] by pushing the pad against the pad spring and move to the outside.

NOTE:

- Align the brake pad tabs with the retainers as shown.

Remove brake pad [2] to move to the center.

Make sure the pad spring [3] and retainers [4] are in place.

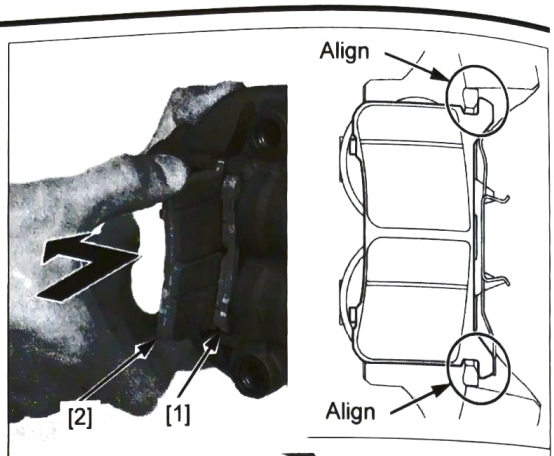

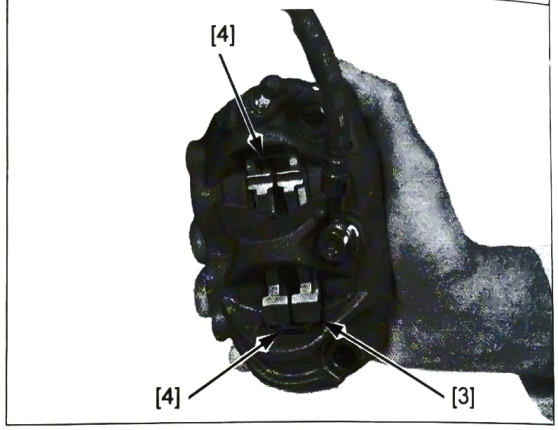

Install the front brake calipers [1] and new front brake caliper mounting bolts [2].

Tighten the front brake caliper mounting bolts to the specified torque.

TORQUE: 45 N·m (4.6 kgf·m, 33 lbf·ft)

Operate the brake lever to seat the caliper pistons against the pads.

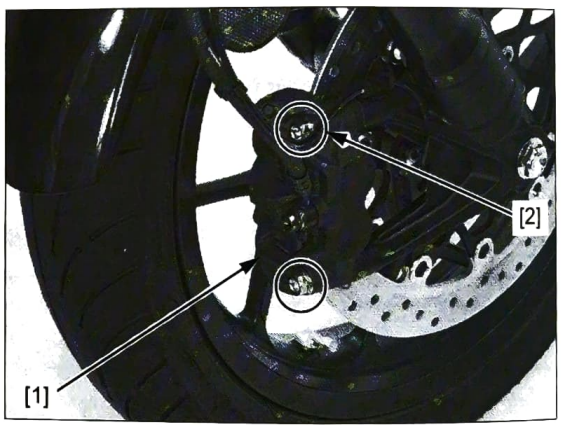

REAR

Loosen the pad pin [1] and remove the caliper bolt [2].

Do not operate the brake pedal after removing the pads.

Pivot the caliper body up, and remove the pad pin and brake pads [3].

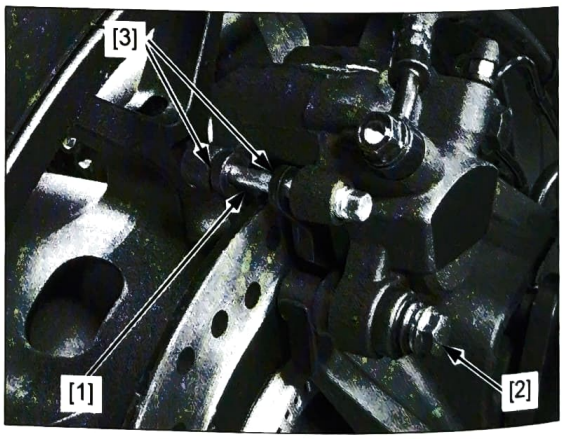

Make sure the pad spring [1] is installed in position (page 19-18).

Be sure the stopper ring [2] on the pad pin is in good condition, and replace it with a new one if necessary.

Coat the stopper ring with silicone grease.

Install the pads [3] so that their ends are resting on the pad retainer [4] properly.

Lower the caliper body and loosely install a new caliper bolt [5].

Install the pad pin [6] by pushing the pads against the pad spring to align the pad pin holes in the pads and caliper body.

Tighten the caliper bolt to the specified torque.

TORQUE: 22 N·m (2.2 kgf·m, 16 lbf·ft)

Tighten the pad pin to the specified torque.

TORQUE: 17 N·m (1.7 kgf·m, 13 lbf·ft)

Operate the brake pedal to seat the caliper piston against the pads.

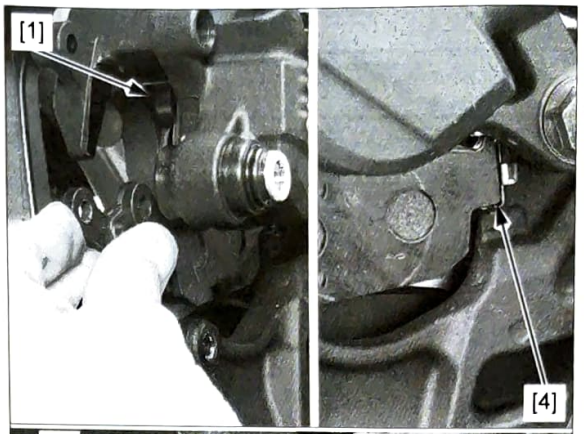

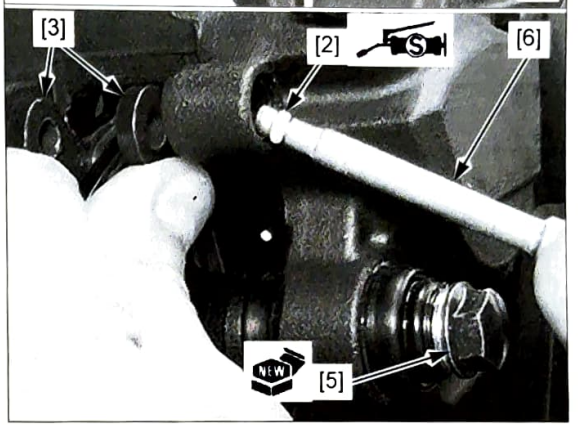

PARKING BRAKE PAD REPLACEMENT (DCT type)

REMOVAL

Loosen the parking brake pad pins [1].

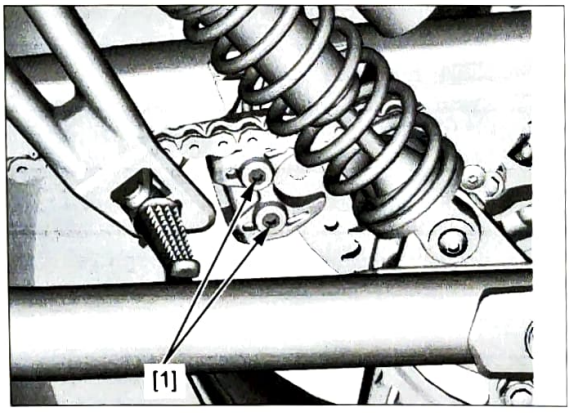

Remove the parking brake caliper mounting bolts [1] and parking brake caliper [2].

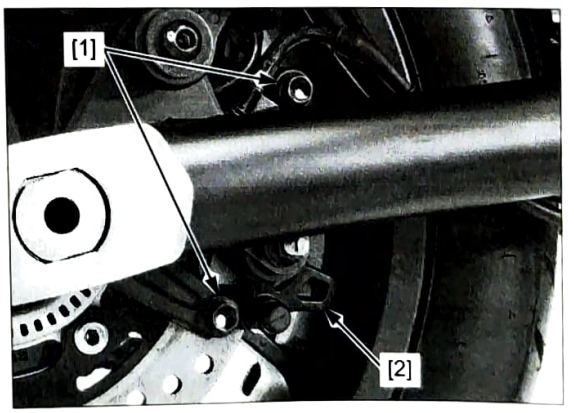

Remove the parking brake pad pins [1] and parking brake pads [2].

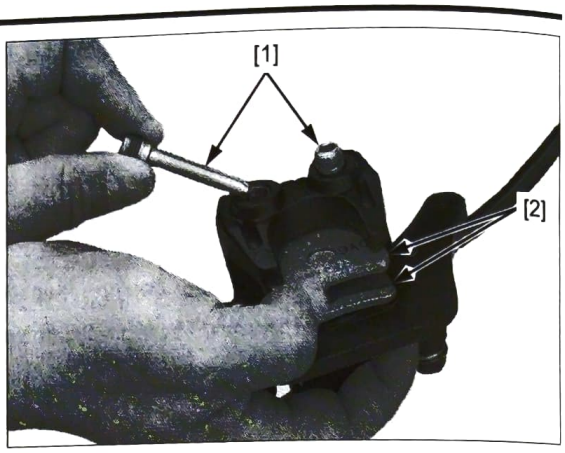

INSTALLATION

Install new parking brake pads [1].

NOTE:

- Make sure the pad spring is installed in position.

Install new parking brake pad pins [2].

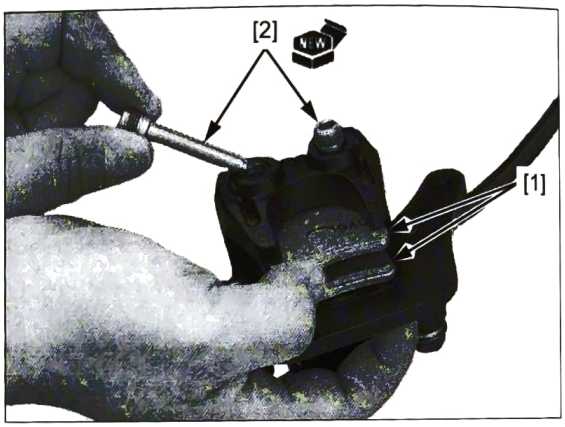

Install the parking brake caliper [1] and new parking brake caliper mounting bolts [2].

Tighten the parking brake caliper mounting bolts to the specified torque.

TORQUE: 30 N·m (3.1 kgf·m, 22 lbf·ft)

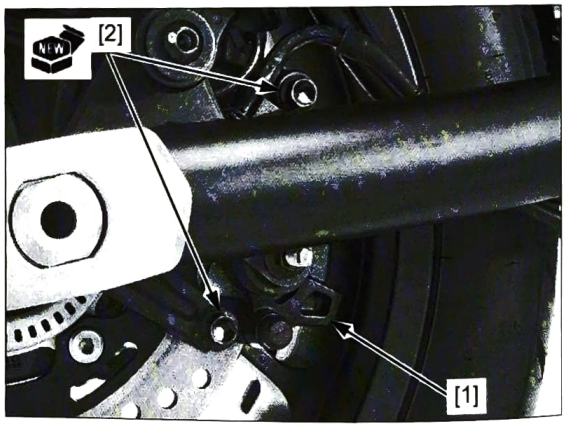

Tighten the parking brake pad pins [1] to the specified torque.

TORQUE: 17 N·m (1.7 kgf·m, 13 lbf·ft)

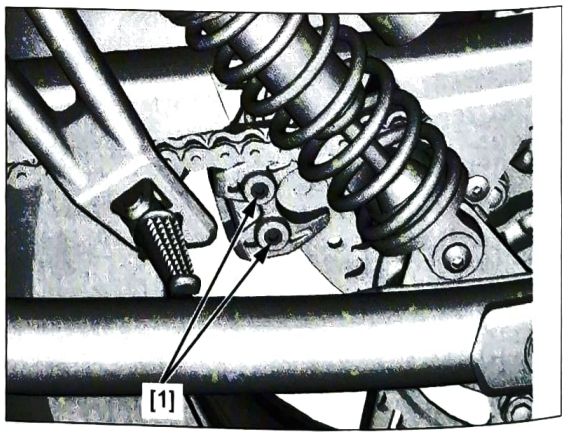

BRAKE DISC INSPECTION

Visually inspect the brake disc for damage or cracks.

Measure the brake disc according to HYDRAULIC BRAKE SPECIFICATIONS (page 1-9)and replace if necessary.

FRONT MASTER CYLINDER

REMOVAL/INSTALLATION

Disconnect the following:

- Front brake switch connectors (upper side) [1]
- Cruise cancel switch connectors (lower side) [2]

Remove the oil bolt [3], sealing washers [4] and brake hose [5].

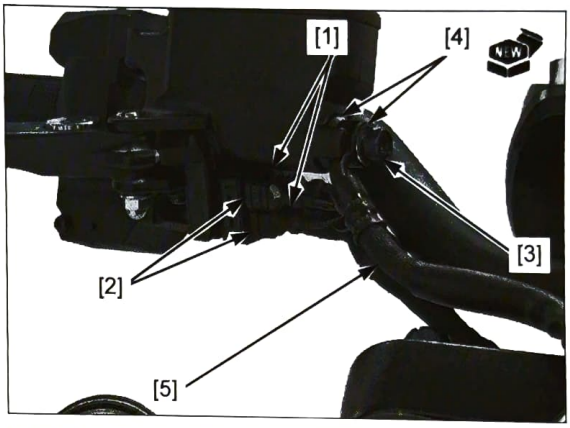

NOTE:

- When removing the oil bolt, cover the end of the brake hose to prevent contamination.
- Avoid spilling fluid on painted, plastic, or rubber parts.

Remove the front master cylinder holder bolts [1], holder [2], and front master cylinder [3].

Installation is in the reverse order of removal.

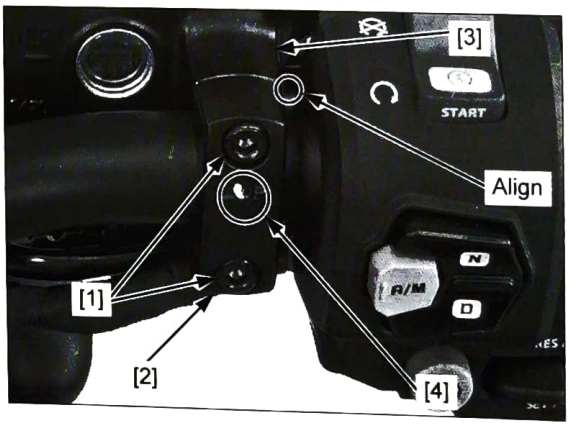

TORQUE:

Front master cylinder holder bolt:
12 N·m (1.2 kgf·m, 9 lbf·ft)

Oil bolt:
34 N·m (3.5 kgf·m, 25 lbf·ft)

NOTE:

- Align the end of the master cylinder with the handlebar punch mark.
- Install the holder with the "UP" mark [4] facing up.
- When tightening the front master cylinder holder bolts, tighten the upper bolt first, then the lower bolt to the specified torque.
- Always replace the sealing washers with new ones.
- Install the brake hose eyelet joint against the master cylinder stopper.

Fill the reservoir to the upper level and bleed the front brake system (page 19-5).

DISASSEMBLY/ASSEMBLY

Disassemble and assemble the front master cylinder as shown in the following illustration.

- Do not allow the piston cup lips to turn inside out.
- Install the snap ring with the chamfered edge facing the thrust load side and be certain it is firmly seated in the groove. Do not reuse the snap ring which could easily spin in the groove.
- Align the switch boss with the master cylinder hole properly.
- When tightening the pivot nut, hold the pivot bolt securely.

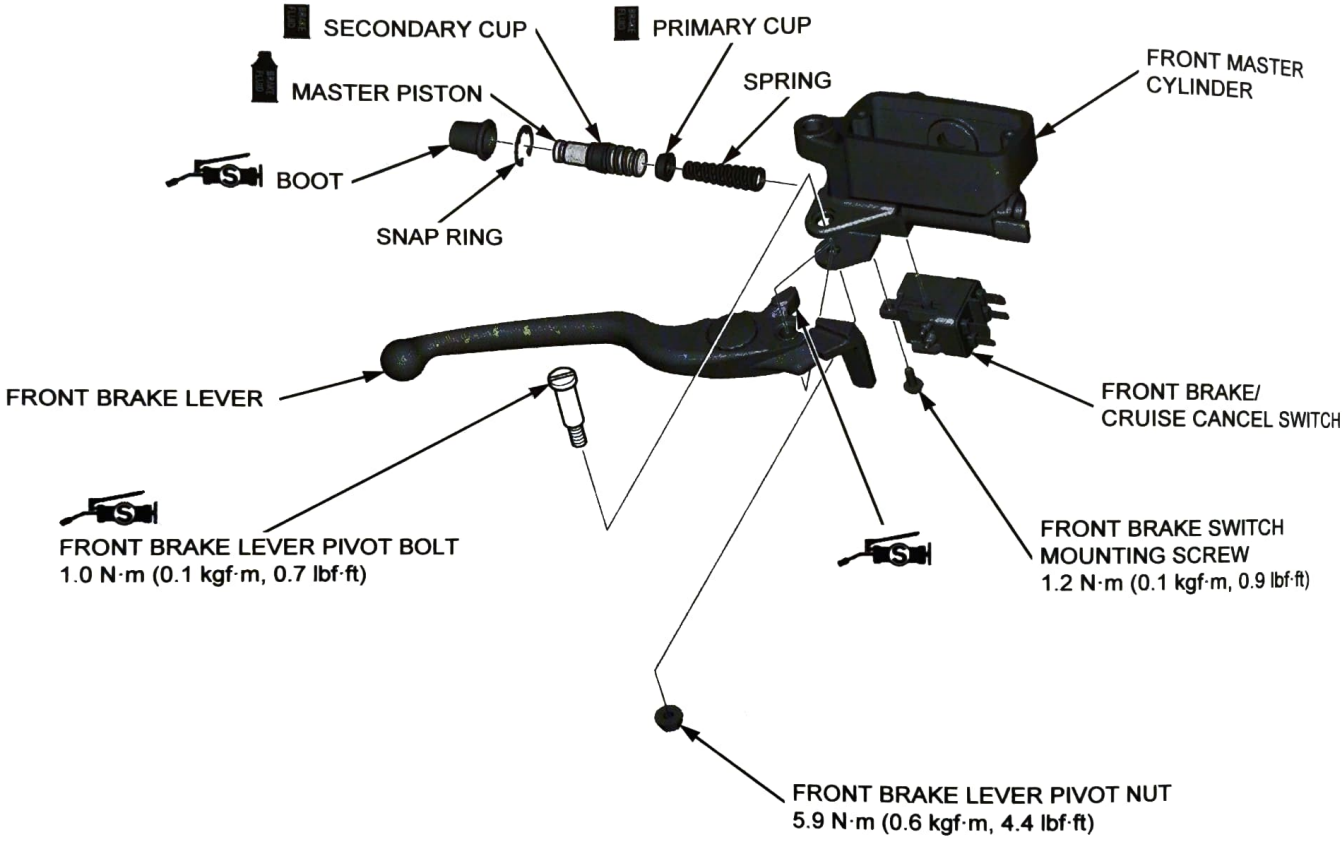

INSPECTION

Check the following parts for scoring, scratches, deterioration or damage.

- master cylinder
- master piston
- piston cups
- spring
- boot

Measure the parts according to HYDRAULIC BRAKE SPECIFICATIONS (page 1-9) and replace if necessary.

REAR MASTER CYLINDER

REMOVAL/INSTALLATION

Drain the brake fluid from the rear brake hydraulic system (page 19-5).

Remove the rear brake reservoir (page 19-6).

When removing the oil bolt, cover the end of the brake hose to prevent contamination.

Disconnect the brake hose [1] by removing the oil bolt [2] and sealing washers [3].

Support the right main step bracket [4] securely and remove the bracket bolts [5].

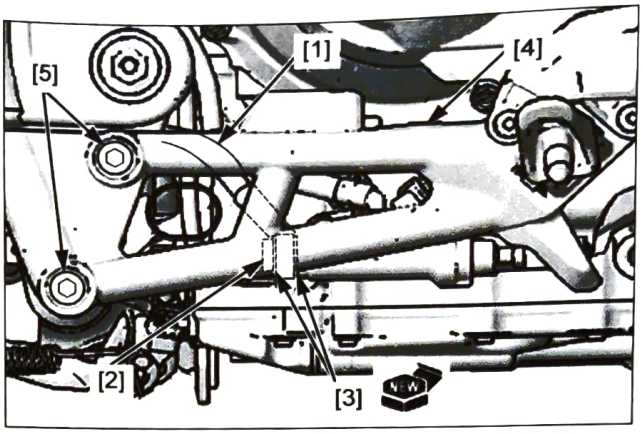

Remove the following.

- cotter pin [1]
- joint pin [2]
- mounting socket bolts [3]
- stay [4]
- master cylinder [5]

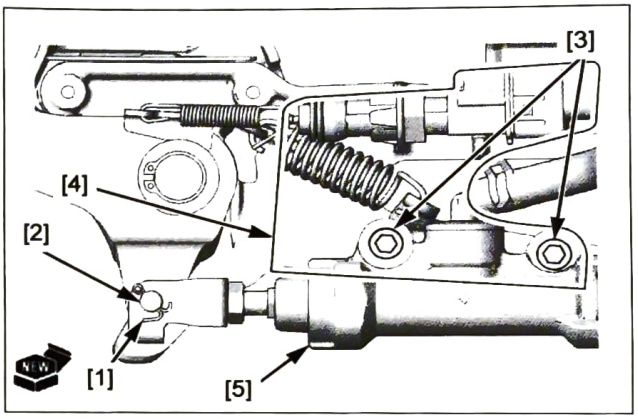

Installation is in the reverse order of removal.

NOTE:

- Replace the sealing washers and cotter pin with new ones.
- Be sure to rest the eyelet stopper pin against the stopper when tightening the oil bolt.

TORQUE:

Main step bracket bolt:
37 N·m (3.8 kgf·m, 27 lbf·ft)

Rear master cylinder mounting socket bolt:
12 N·m (1.2 kgf·m, 9 lbf·ft)

Oil bolt:
34 N·m (3.5 kgf·m, 25 lbf·ft)

Fill and bleed the rear brake hydraulic system (page 19-6).

DISASSEMBLY/ASSEMBLY

Disassemble and assemble the rear master cylinder as shown in the following illustration.

- Adjust the push rod length between the center of the lower mounting bolt hole and center of the joint pin hole when installing the push rod joint.
- Do not allow the piston cup lips to turn inside out.
- Install the snap ring with the chamfered edge facing the thrust load side and be certain it is firmly seated in the groove. Do not reuse the snap ring which could easily spin in the groove.

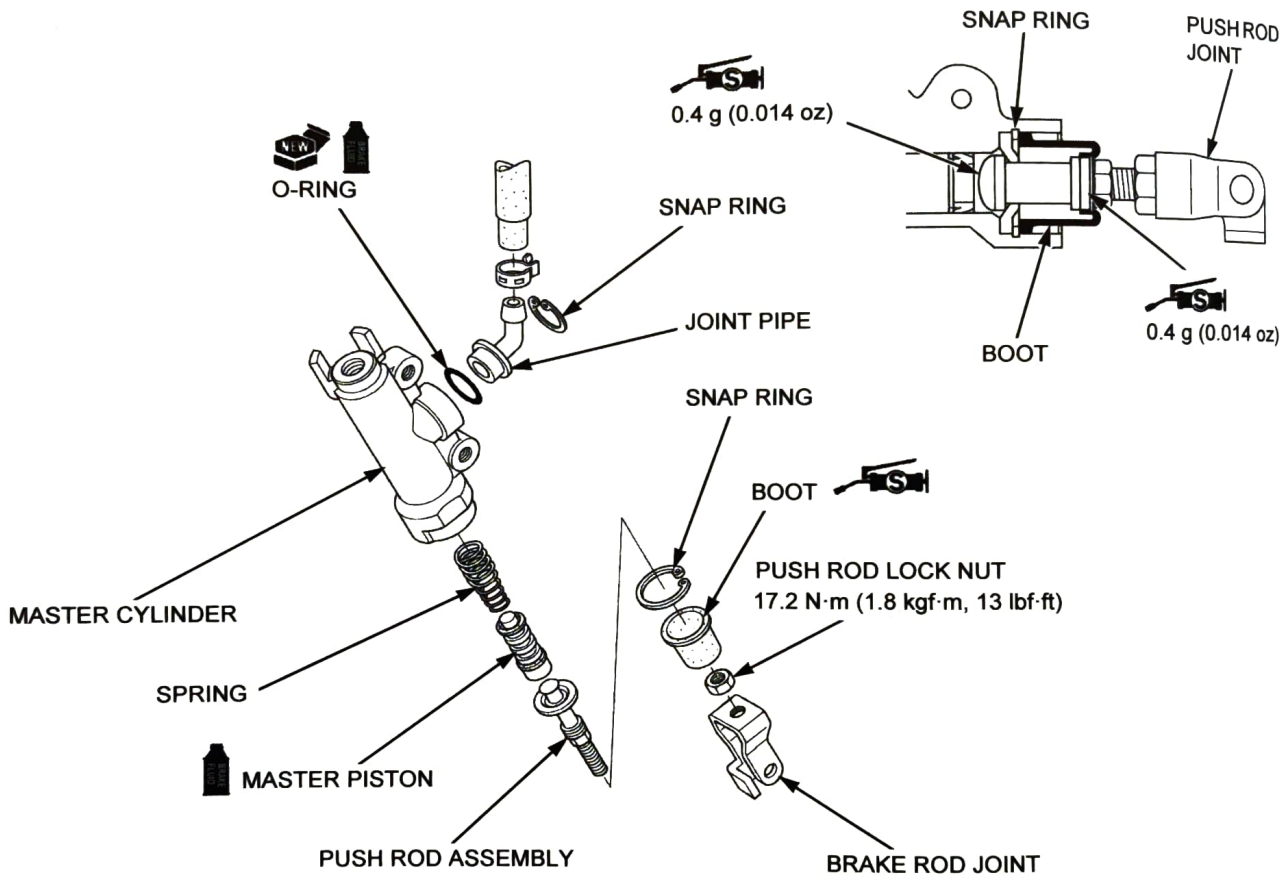

When the push rod has been disassembled, adjust the push rod length so that the distance from the center of the master cylinder lower mounting bolt hole to the center of the joint pin hole is standard length as shown.

If the length is adjusted to the longer position, make sure that the lower end of the push rod thread [1] is visible inside the joint.

After adjustment, tighten the lock nut [2] to the specified torque.

TORQUE:

Rear master cylinder push rod lock nut:
17.2 N·m (1.8 kgf·m, 13 lbf·ft)

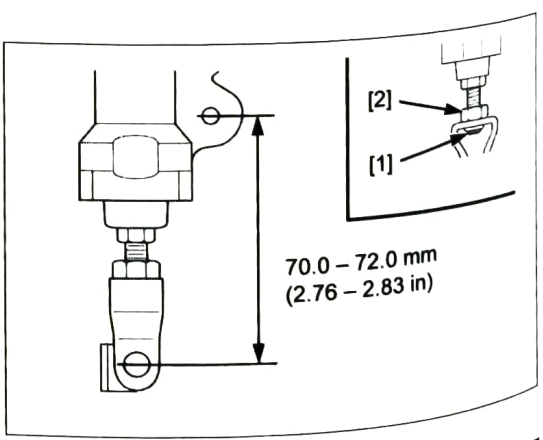

INSPECTION

Check the following parts for scoring, scratches, deterioration or damage.

- master cylinder
- master piston
- piston cups
- spring
- boot

Measure the parts according to HYDRAULIC BRAKE SPECIFICATIONS (page 1-9) and replace if necessary.

FRONT BRAKE CALIPER

REMOVAL/INSTALLATION

Drain the brake fluid from the front brake hydraulic system (page 19-5).

Remove the following:

When removing the oil bolt, cover the end of brake hose to prevent contamination.

- oil bolt [1]
- sealing washers [2]
- brake hose [3]
- brake caliper mounting bolts [4]
- brake caliper [5]

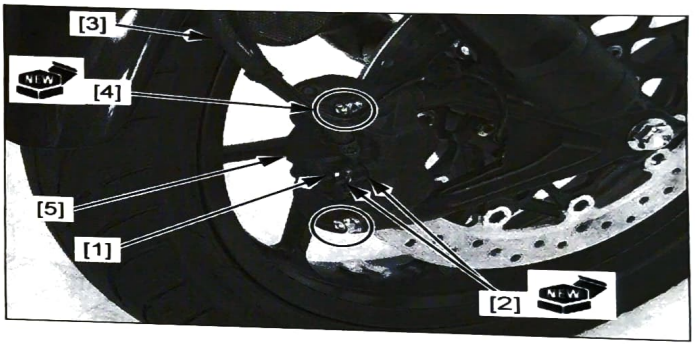

Installation is in the reverse order of removal.

NOTE:

- Replace the brake caliper mounting bolts and sealing washers with new ones.
- Be sure to rest the eyelet stopper pin against the caliper body when tightening the oil bolt.

TORQUE:

Front brake caliper mounting bolt:
45 N·m (4.6 kgf·m, 33 lbf·ft)

Oil bolt:
34 N·m (3.5 kgf·m, 25 lbf·ft)

Fill and bleed the rear brake hydraulic system (page 19-6).

DISASSEMBLY/ASSEMBLY

Disassemble and assemble the front brake caliper as shown in the following illustration.

For brake pad removal/installation (page 19-7).

- Mark the pistons to ensure that they are reinstalled in their original locations.
- When removing the caliper pistons with compressed air, place a shop towel over the pistons to prevent damaging the pistons and caliper body. Do not use high pressure or bring the nozzle too close to the fluid inlet.
- Install the pistons with the opening toward the pads.

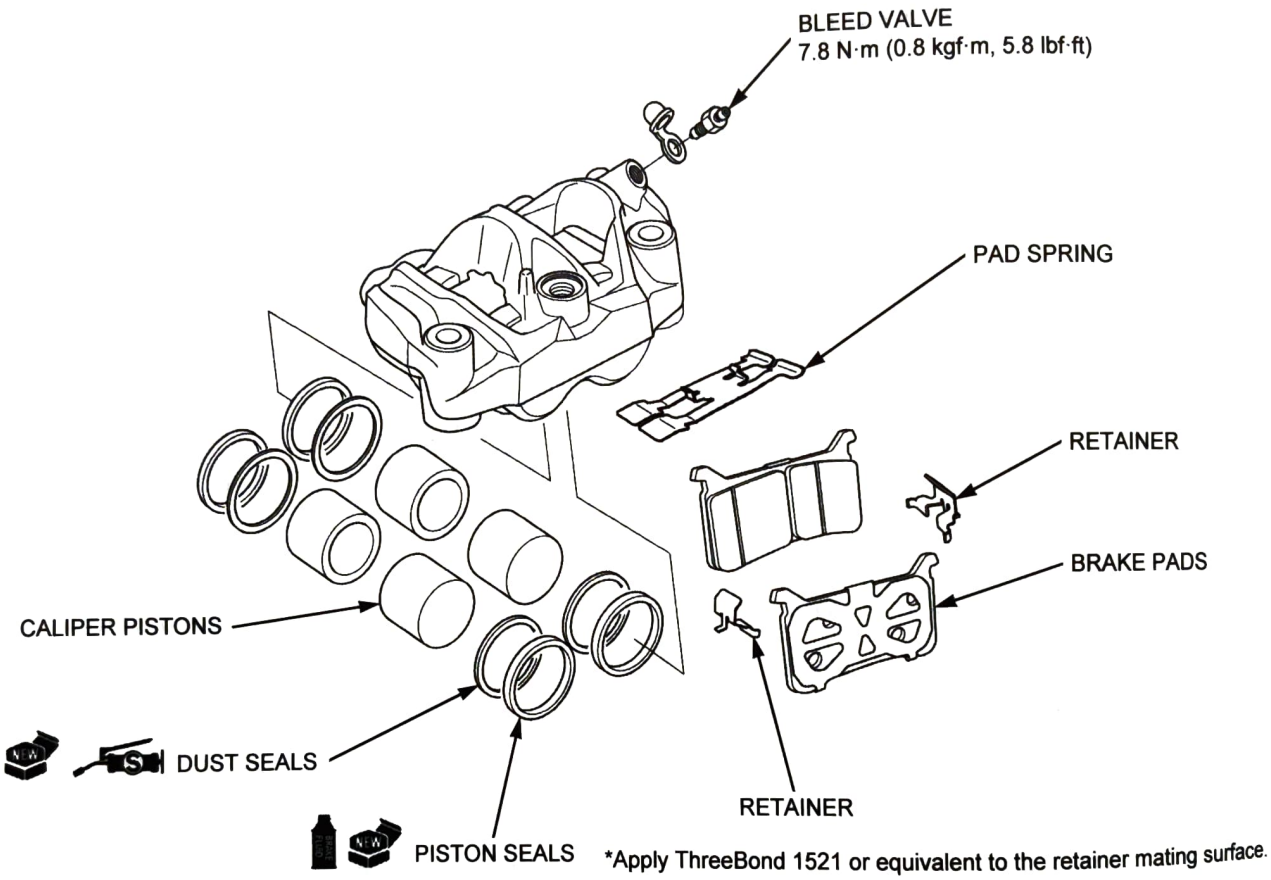

INSPECTION

Check the following parts for scoring, scratches, deterioration or damage.

- caliper cylinders
- caliper pistons

Measure the parts according to HYDRAULIC BRAKE SPECIFICATIONS (page 1-9) and replace if necessary.

REAR BRAKE CALIPER

REMOVAL/INSTALLATION

Drain the brake fluid from the rear brake hydraulic system (page 19-5).

When removing the oil bolt, cover the end of brake hose to prevent contamination.

- oil bolt [1]
- sealing washers [2]
- brake hose [3]
- caliper pin bolt [4]
- brake caliper [5]
- caliper pin boot [6]

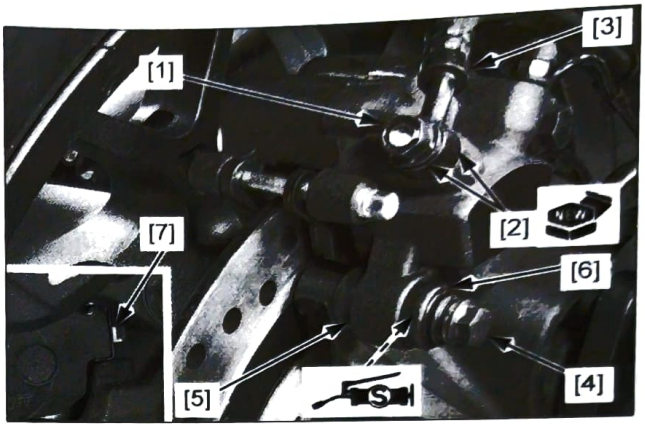

Installation is in the reverse order of removal.

NOTE:

- Replace the and sealing washers with new ones.
- If the pad retainer [7] was removed, apply ThreeBond 1521 or equivalent to the retainer seating surface.
- Apply 0.4 g of silicone grease to the sliding area of the caliper pin bolt.
- Be sure to rest the eyelet stopper pin against the caliper body when tightening the oil bolt.

TORQUE:

Rear brake caliper pin bolt:
27 N·m (2.8 kgf·m, 20 lbf·ft)

Oil bolt:
34 N·m (3.5 kgf·m, 25 lbf·ft)

Fill and bleed the rear brake hydraulic system (page 19-6).

DISASSEMBLY/ASSEMBLY

Disassemble and assemble the rear brake caliper as shown in the following illustration.

- When removing the caliper piston with compressed air, place a shop towel over the piston to prevent damaging the piston and caliper body. Do not use high pressure or bring the nozzle too close to the fluid inlet.
- Install the piston with the opening toward the pads.

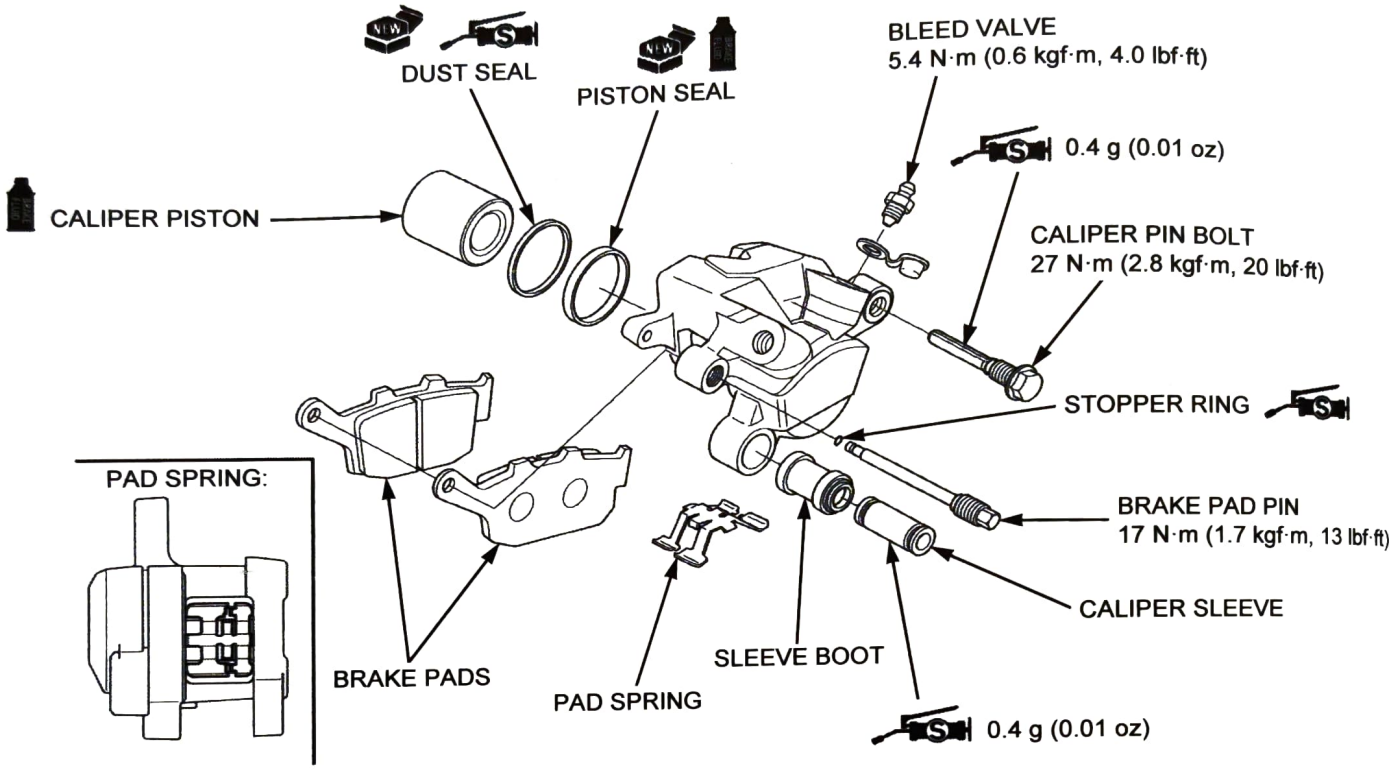

INSPECTION

Check the following parts for scoring, scratches, deterioration or damage.

- caliper cylinder
- caliper piston

Measure the parts according to HYDRAULIC BRAKE SPECIFICATIONS (page 1-9) and replace if necessary.

BRAKE PEDAL

REMOVAL/INSTALLATION

Remove the right side cover (page 2-4).

Support the right main step bracket [1] securely and remove the bracket socket bolts [2].

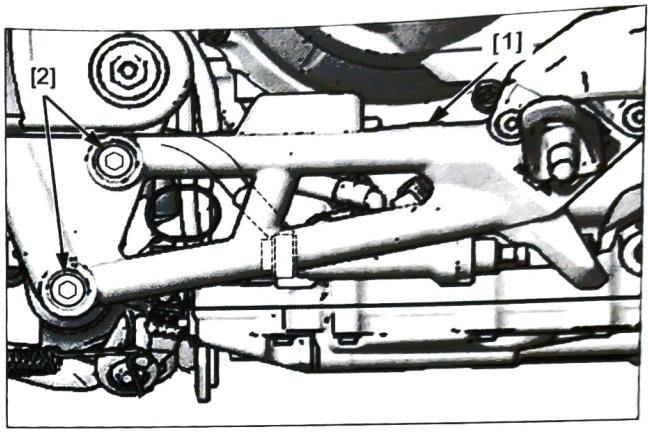

Remove the following:

- switch spring [1]
- cotter pin [2]
- joint pin [3]
- snap ring [4]
- washer [5]
- brake pedal [6]

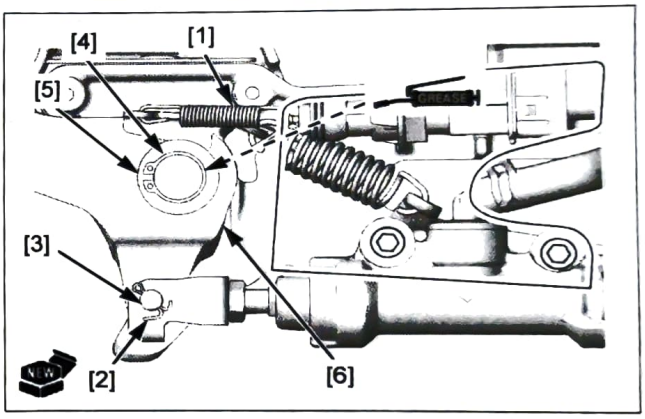

Installation is in the reverse order of removal.

NOTE:

- Apply grease to the pedal pivot sliding area (grease groove).
- Install the snap ring with the chamfered edge facing the thrust load side and be certain it is firmly seated in the groove. Do not reuse the snap ring which could easily spin in the groove.
- Replace the cotter pin with a new one.
- Install each spring in the direction as shown.

TORQUE:

Main step bracket mounting socket bolt:
37 N·m (3.8 kgf·m, 27 lbf·ft)

PARKING BRAKE LEVER (DCT type)

REMOVAL/INSTALLATION

Remove the following:

- Left rearview mirror (page 2-6)
- Parking brake switch (page 22-23)

Loosen the parking brake cable mounting nut [1].

Remove the socket bolts [2], holder [3] and parking brake lever bracket [4].

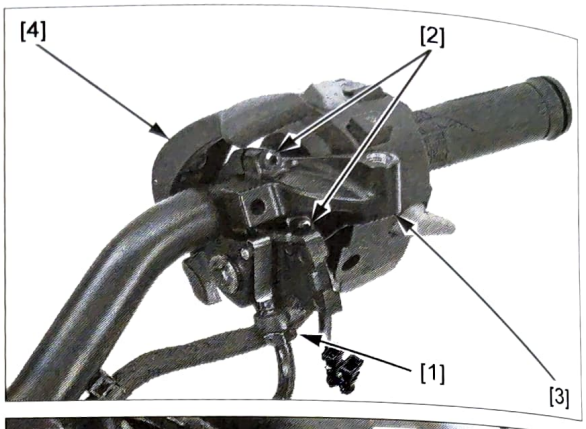

Remove the parking brake adjuster bolt lock nut [1] while holding the brake arm [2].

Remove the brake arm and release the parking brake cable [3] from the cable guide [4].

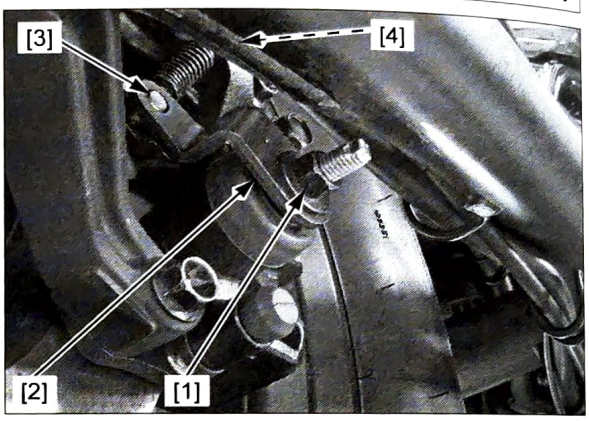

Turn the parking brake lever bracket [1] and remove the parking brake cable joint [2] from the bracket.

Disconnect the parking brake cable [3].

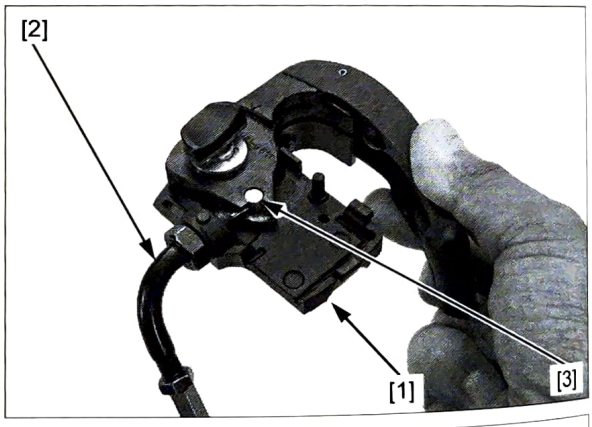

Installation is in the reverse order of removal.

NOTE:

- Align the parking brake lever bracket locating pin with the handlebar hole.
- Route the cables and wire harness properly (page 1-27).

TORQUE:

Parking brake adjuster bolt lock nut:
17 N·m (1.7 kgf·m, 13 lbf·ft)
Parking brake cable mounting nut:
10 N·m (1.0 kgf·m, 7 lbf·ft)

Check the parking brake lock operation (page 3-23).

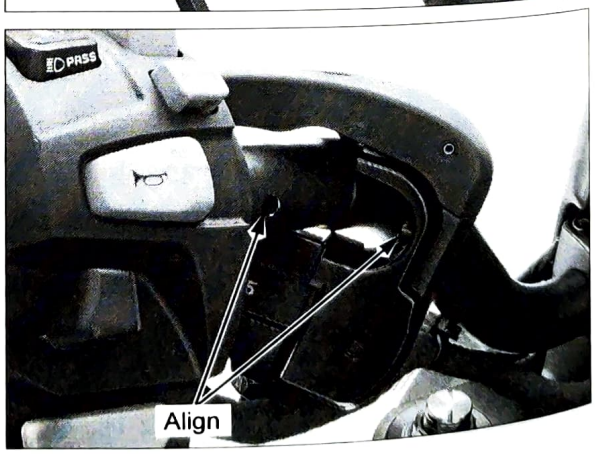

DISASSEMBLY

Remove the lower holder cap [1].

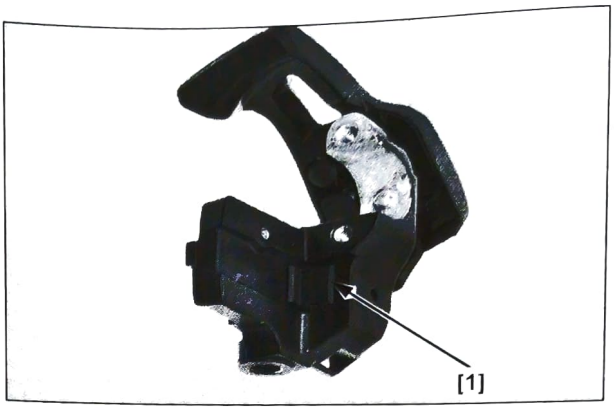

Remove the spring pin [1] and release shaft [2].

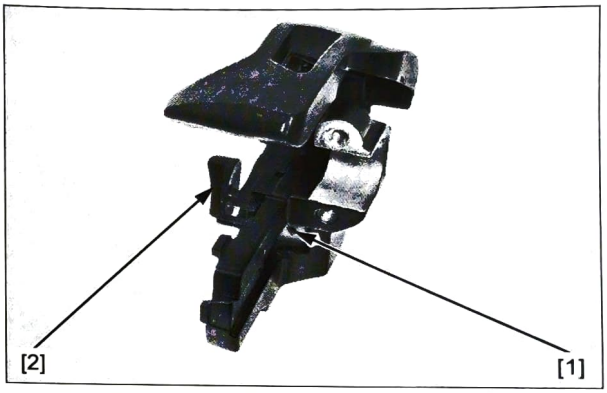

Remove the E-clip [1], washer [2] and parking brake lever [3].

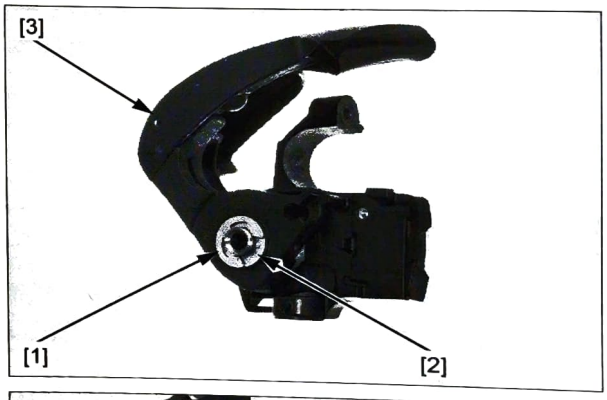

Remove the ratchet B [1].

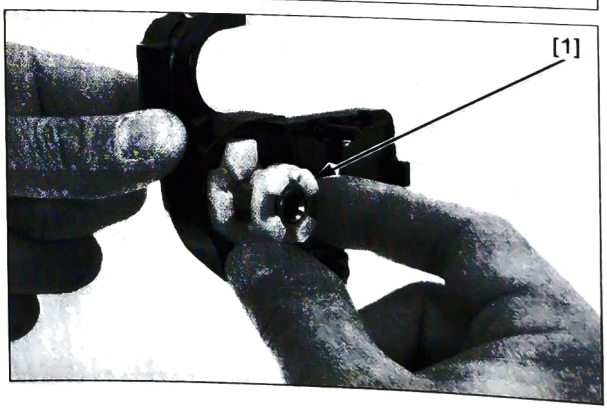

Remove the ratchet A [1] and springs [2].

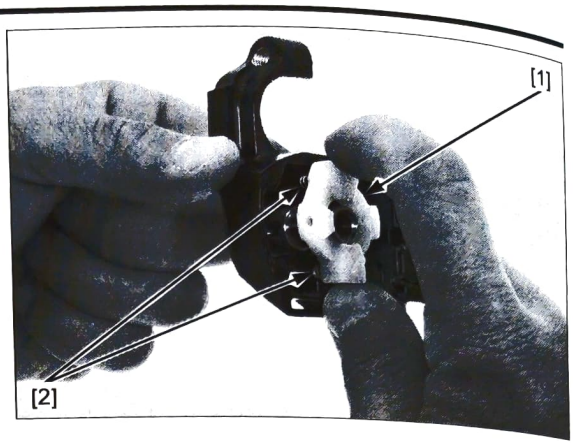

ASSEMBLY

Apply grease to the ratchet A teeth and sliding surface.

Install the springs [1] and ratchet A [2].

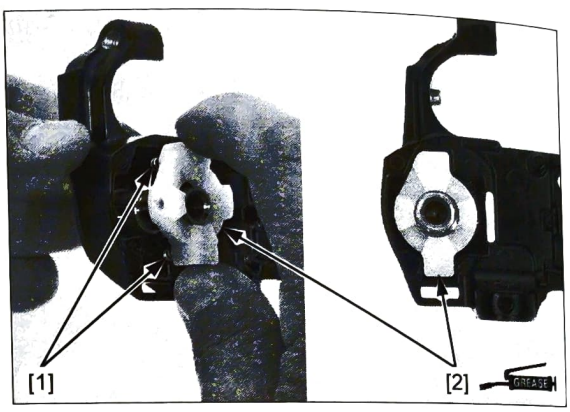

Apply grease to the ratchet B teeth and sliding surface.

Install the ratchet B [1] with its tab [2] facing up.

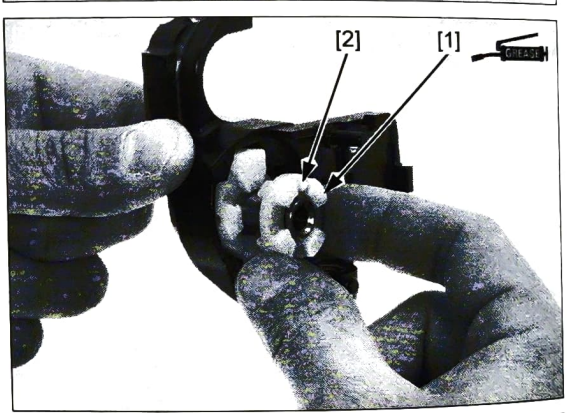

Apply grease to the parking brake lever sliding surface.

Install the parking brake lever [1].

NOTE:

Align the parking brake lever hole with the ratchet B tab.

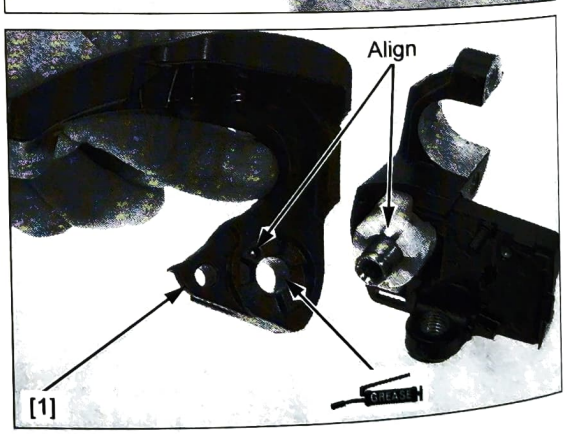

Apply grease to the washer sliding surface.

Install the washer [1] and E-clip [2].

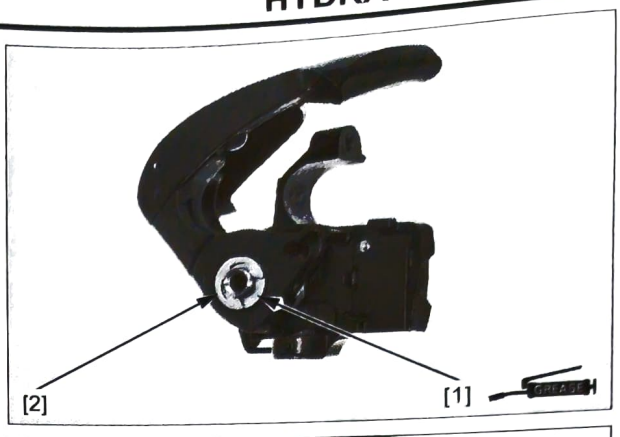

Install the release shaft [1] and new spring pin [2] while aligning the hole of the release shaft, ratchet A and parking brake lever bracket.

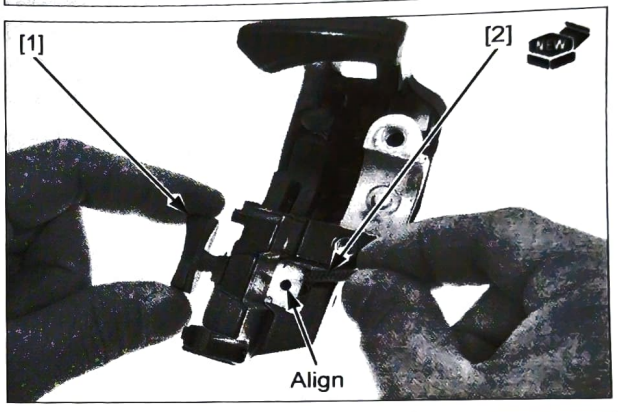

Install the lower holder cap [1].

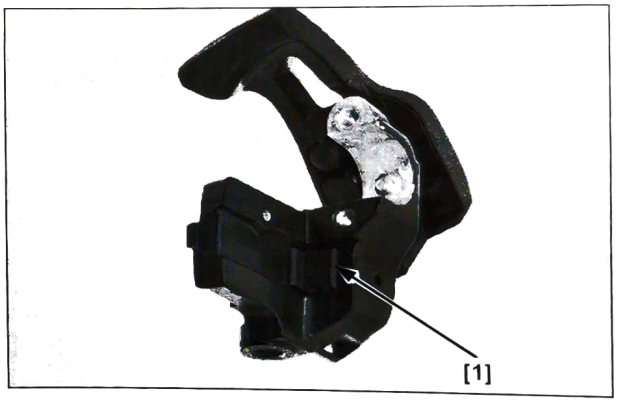

PARKING BRAKE CALIPER (DCT type)

REMOVAL/INSTALLATION

Remove the parking brake pads (page 19-7).

Disconnect the parking brake cable [1] from the brake arm [2] and remove it from cable stay [3] of the caliper body.

Installation is in the reverse order of removal.

Check the parking brake lock operation (page 3-23).

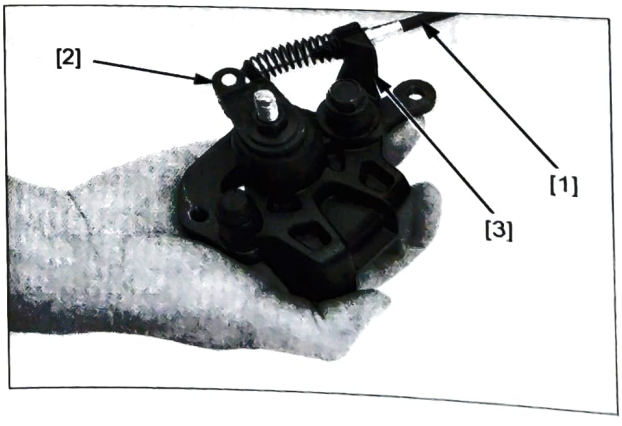

DISASSEMBLY

Remove the caliper pin bolt [1].

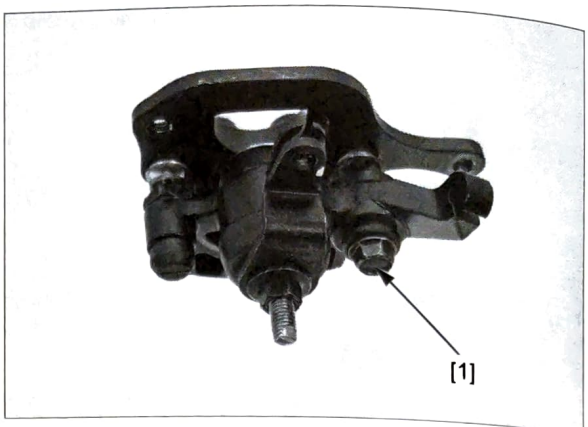

Remove the following:

- Caliper bracket [1]
- Pad spring [2]
- Bracket pin boot [3]
- Caliper pin boot [4]
- Sleeve [5]

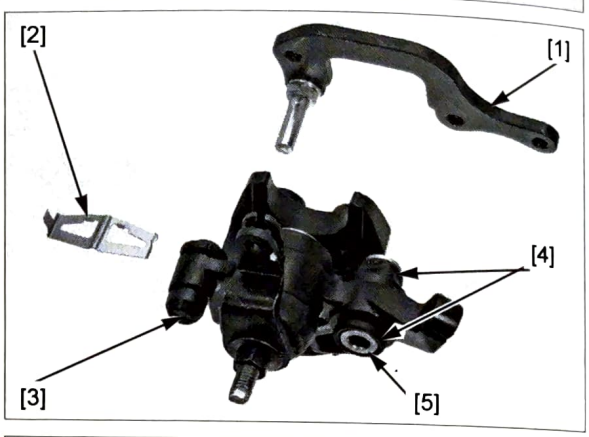

Remove the parking brake adjuster bolt lock nut [1] while holding the brake arm [2].

Remove the brake arm.

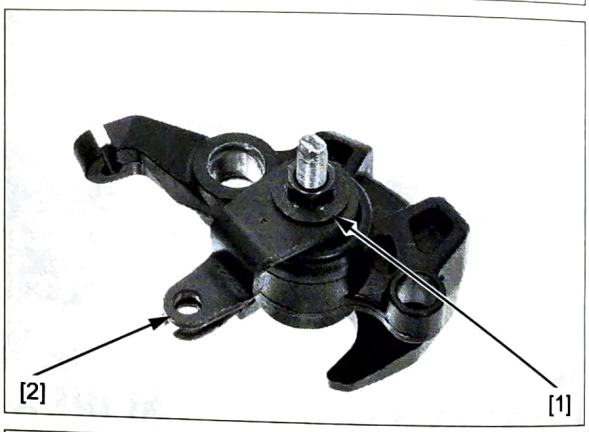

Remove the brake shaft boot [1].

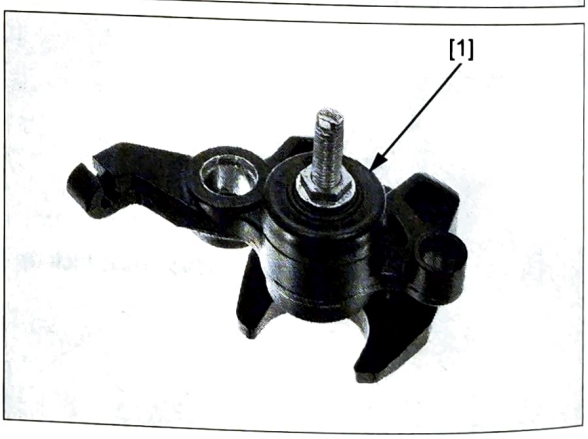

Remove the adjuster bolt/piston [1] while holding the brake shaft [2].

Remove the brake shaft.

NOTE:
Do not disassemble the adjuster bolt/piston.

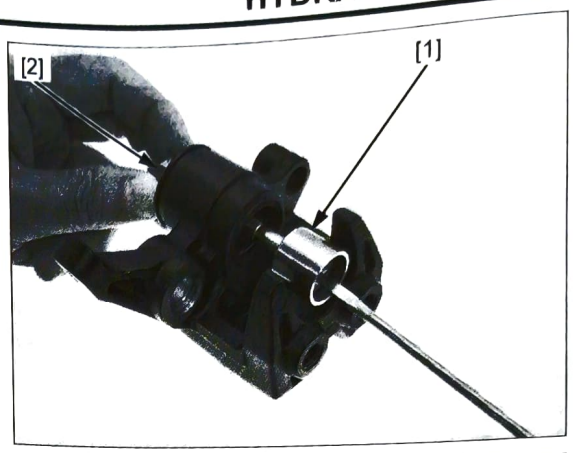

Remove the dust seal [1].

Clean the caliper cylinder and brake shaft sliding surface.

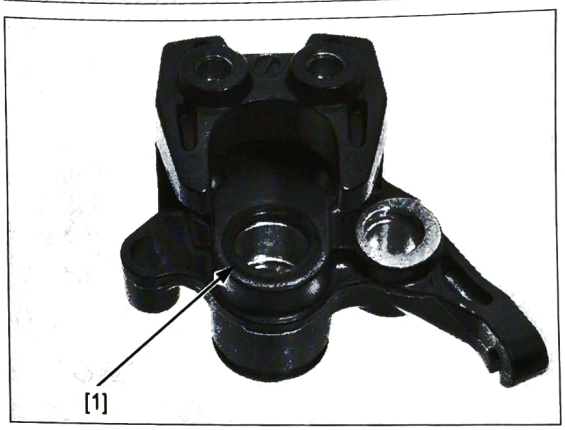

INSPECTION

Inspect the following parts for scoring, scratches, or damage.

- Caliper cylinder
- Caliper piston

Replace if necessary.

ASSEMBLY

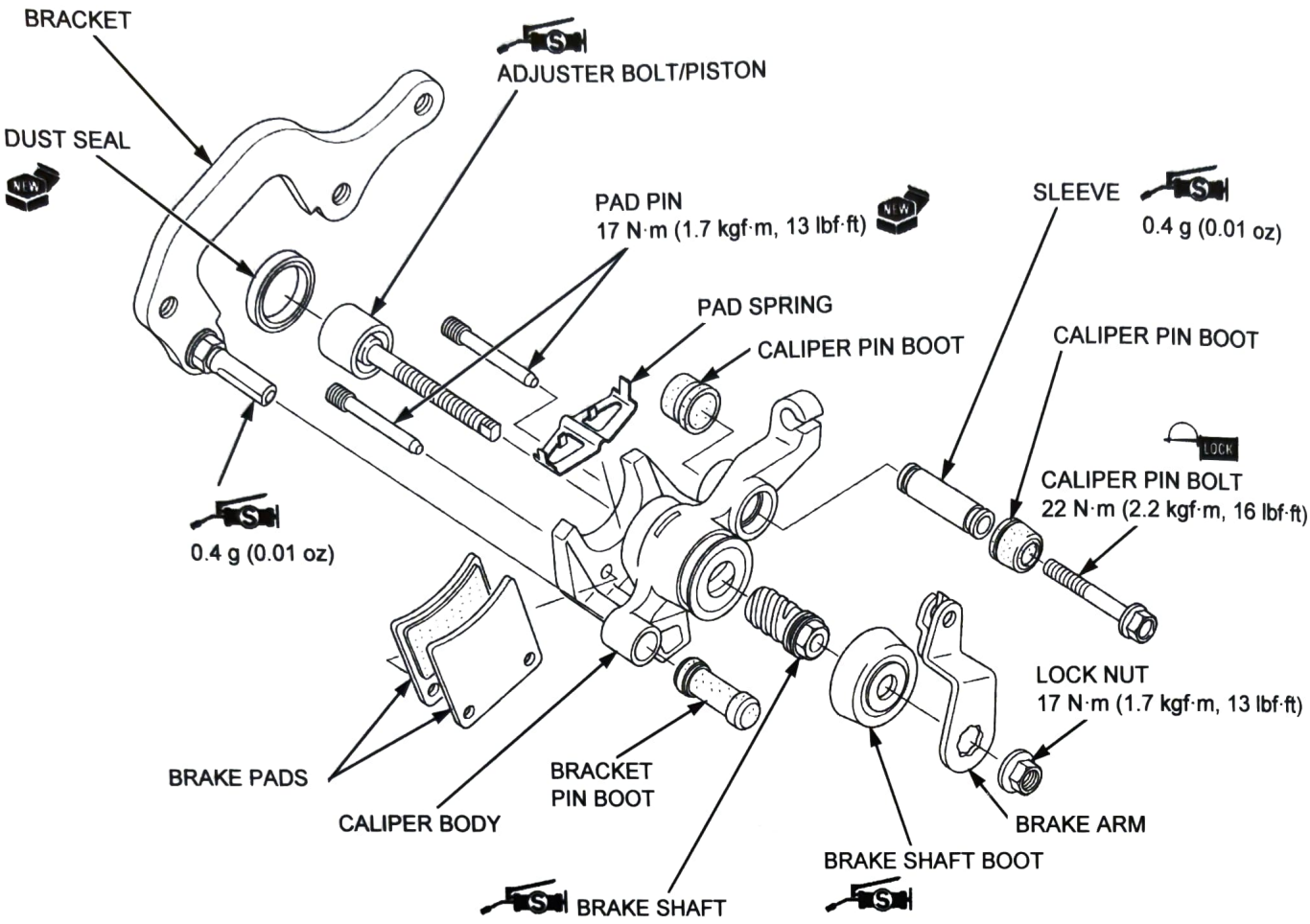

Install a new dust seal [1] into the seal groove in the caliper.

- Install the dust seal with its flat surface facing inside.

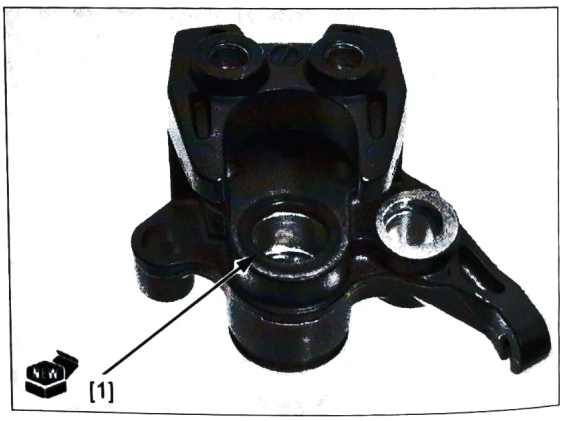

Apply 0.4 g (0.01 oz) minimum of silicone grease to the outer surface of the brake shaft [1].

Position the brake shaft so that the punch mark [2] is between the index lines [3] (installation range), and screw the shaft into the caliper.
Make sure that the punch mark is positioned between the index lines with the shaft fully installed.

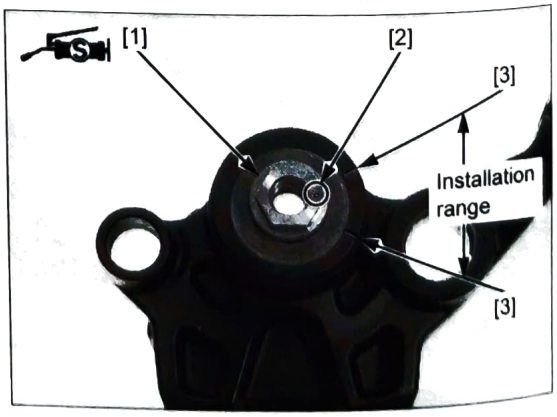

Apply 0.4 g (0.01 oz) minimum of silicone grease to the adjuster bolt threads and piston sliding surface.

Install the adjuster bolt/piston [1] while holding the brake shaft [2].

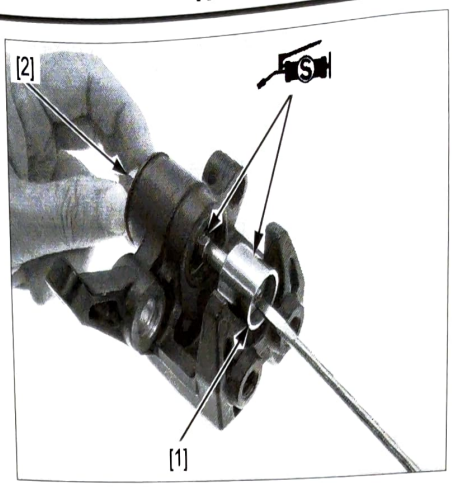

Apply 0.4 g (0.01 oz) minimum of silicone grease to the brake shaft boot lips.

Install the brake shaft boot [1] to the caliper groove.

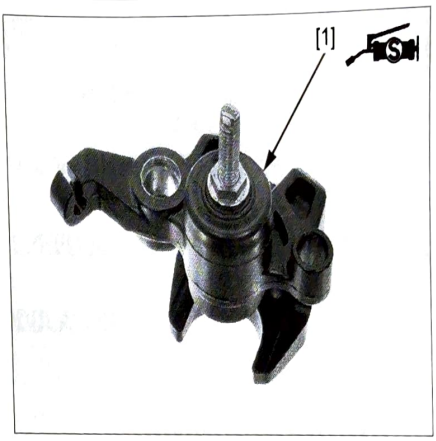

Install the brake arm [1] by aligning with the punch marks.

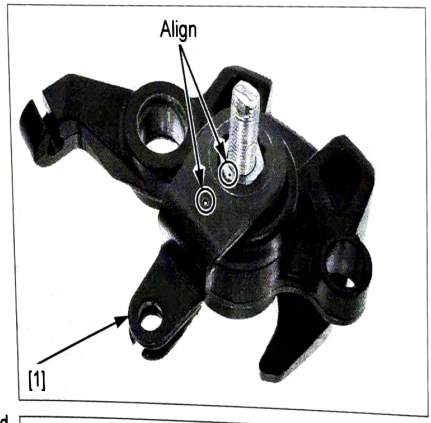

Install the lock nut [1] and tighten it to the specified torque while holding the brake arm [2].

TORQUE: 17 N·m (1.7 kgf·m, 13 lbf·ft)

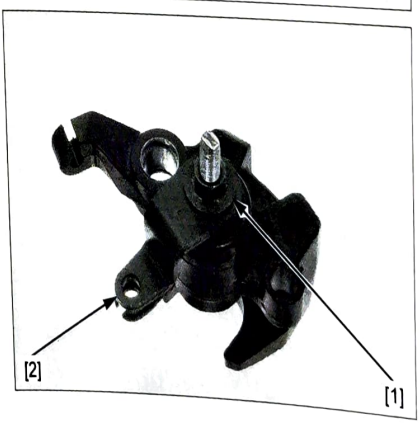

Apply 0.4 g (0.01 oz) minimum of silicone grease to the bracket pin [1] and sleeve [2] sliding surface.

Install the following:

- Sleeve
- Caliper pin boots [3]
- Bracket pin boot [4]
- Pad spring [5]
- Caliper bracket [6]

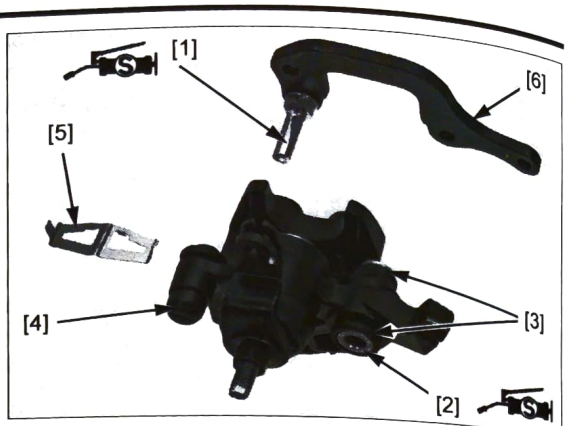

Apply locking agent to the parking brake caliper pin bolt threads.

Install the parking brake caliper pin bolt [1] and tighten it to the specified torque.

TORQUE: 22 N·m (2.2 kgf·m, 16 lbf·ft)

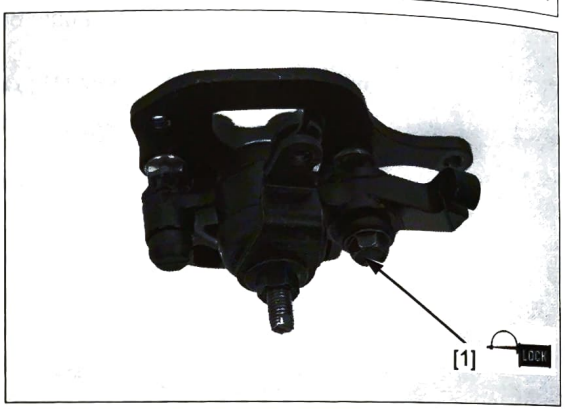

20. ANTI-LOCK BRAKE SYSTEM (ABS)

SERVICE INFORMATION 20-2

SYSTEM LOCATION 20-3

SYSTEM DIAGRAM 20-4

ABS TROUBLESHOOTING INFORMATION 20-5

DTC INDEX 20-9

ABS INDICATOR CIRCUIT TROUBLESHOOTING 20-11

ABS TROUBLESHOOTING 20-13

WHEEL SPEED SENSOR 20-22

ABS MODULATOR 20-25

SERVICE INFORMATION

GENERAL

NOTICE

- *The ABS modulator may be damaged if dropped. Also if a connector is disconnected when current is flowing, the excessive voltage may damage the control unit. Always turn off the ignition switch before servicing.*
- *Spilling brake fluid will severely damage plastic parts and painted surfaces. It is also harmful to some rubber parts.*
- This section covers service of the Anti-lock Brake System (ABS). For other service (conventional brake) of the brake system, see Hydraulic Brake section (page 19-2).
- The ABS control unit is integrated in the modulator. Do not disassemble the ABS modulator. Replace the ABS modulator as an assembly when it is faulty.
- The ABS control unit performs pre-start self-diagnosis to check whether the ABS functions normally until the vehicle speed reaches 10 km/h (6 mph). After pre-start self-diagnosis, the ABS control unit monitors the ABS functions and vehicle running condition constantly until the ignition switch is turned OFF (ordinary self-diagnosis).
- When the ABS control unit detects a problem, it stops the ABS function and switches back to the conventional brake operation, and the ABS indicator blinks or stays on. Take notice during the test-ride.
- Read "ABS Troubleshooting Information" carefully, inspect and troubleshoot the ABS system according to the troubleshooting flow chart. Observe each step of the procedures one by one. Write down the DTC and probable faulty part before starting diagnosis and troubleshooting.
- Use a fully charged battery. Do not diagnose with a charger connected to the battery.
- After troubleshooting, erase the DTC and perform the pre-start self-diagnosis to be sure that the ABS indicator is operating normally (page 20-5).
- Troubles not resulting from a faulty ABS (e.g. brake disc squeak, unevenly worn brake pad) cannot be recognized by the ABS diagnosis system.
- When the wheel speed sensor and/or pulser ring is replaced, be sure to check the air gap (page 20-22).
- The following color codes are used throughout this section.

Bl = Black	G = Green	P = Pink	W = White
Bu = Blue	Gr = Gray	R = Red	

TOOLS

Test probe, 2 pack 07ZAJ-RDJA110 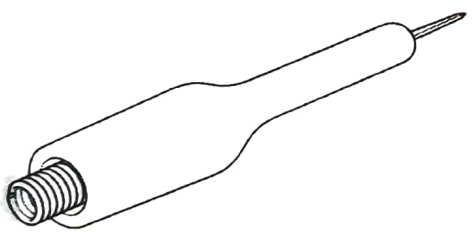	SCS short connector 070MZ-0010300 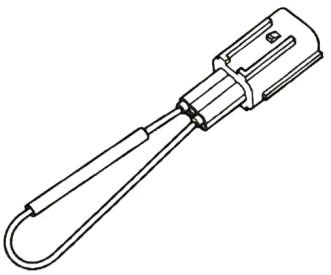 or 070MZ-001A300 (U.S.A. only)

SYSTEM LOCATION

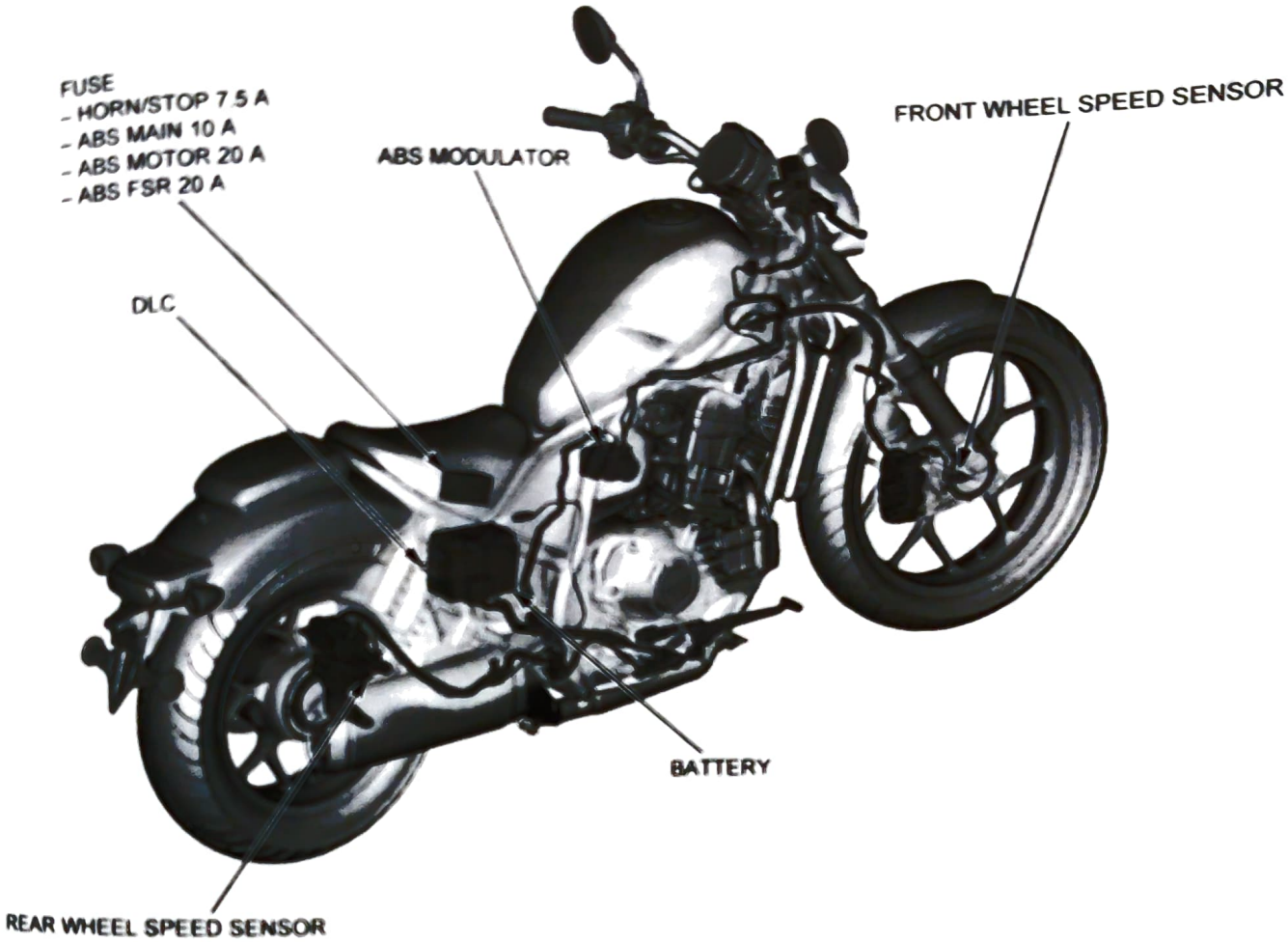

SYSTEM DIAGRAM

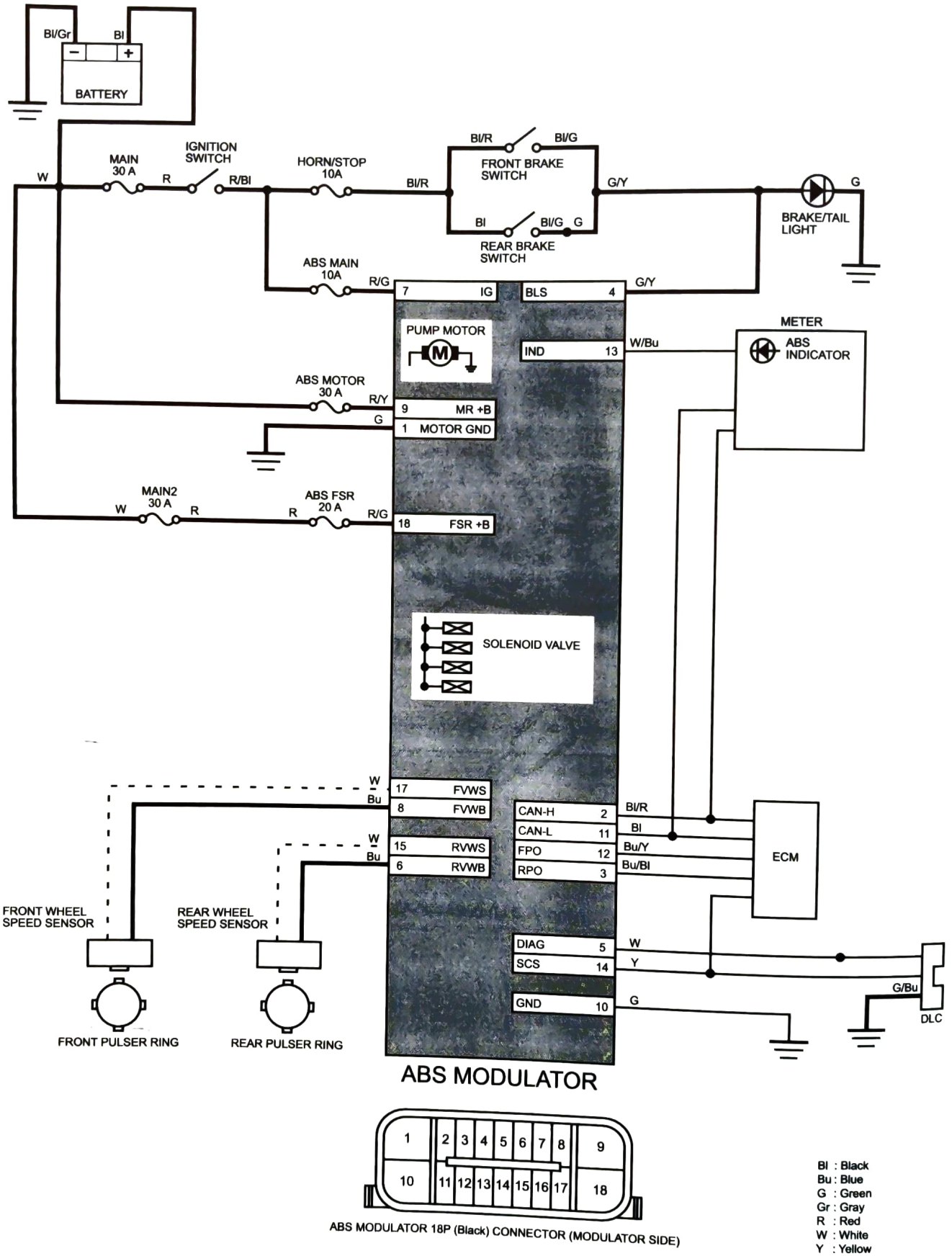

ABS TROUBLESHOOTING INFORMATION

SYSTEM DESCRIPTION

SUMMARY OF ABS PRE-START SELF-DIAGNOSIS SYSTEM

The ABS pre-start self-diagnosis system diagnoses the electrical system as well as the operating status of the modulator. When there is any abnormality, the problem and the associated part can be detected by reading the DTC.

When the motorcycle is running, pulse signals generated at the front and rear wheel speed sensors are sent to the ABS control unit. When the vehicle speed reaches approximately 6 km/h (4 mph), the ABS control unit operates the pump motor to check it. When the vehicle speed reaches 10 km/h (6 mph), the ABS control unit turns off the ABS indicator if the system is normal and the pre-start self-diagnosis is completed.

If any problem is detected, the ABS indicator blinks or comes on and stays on to notify the rider of the problem. The self-diagnosis is also made while the motorcycle is running, and the ABS indicator blinks when a problem is detected. When the ABS indicator blinks, the cause of the problem can be identified by reading the DTC (page 20-6).

If the ABS indicator does not come on when the ignition switch is turned ON, or the ABS indicator stays on after the pre-start self-diagnosis is completed although the ABS system is normal, the ABS indicator circuit may be faulty. Follow the troubleshooting (page 20-11).

Pre-start serf-diagnosis when the system is normal:

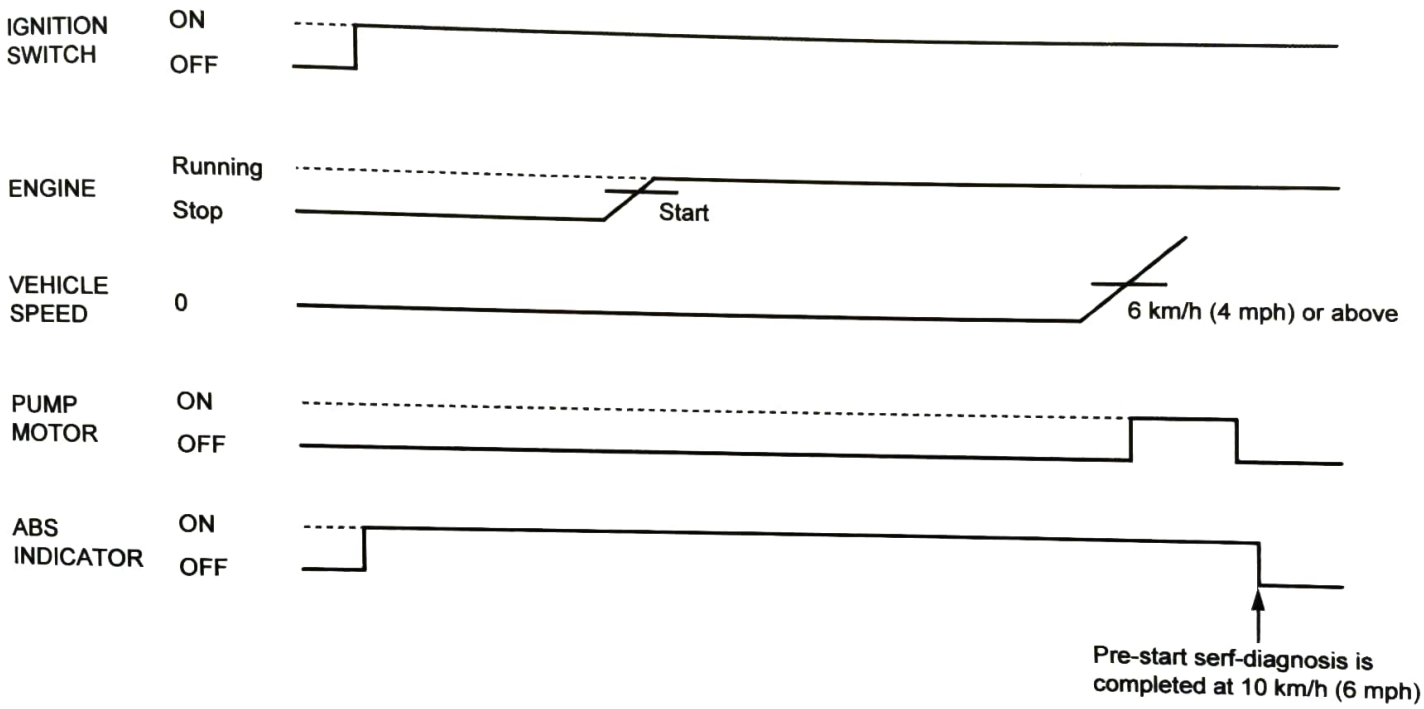

PRE-START SELF-DIAGNOSIS PROCEDURE (Daily check)

1. Turn the ignition switch ON with the engine stop switch ○.
2. Make sure the ABS indicator comes on.
3. Start the engine.
4. Ride the motorcycle and increase the vehicle speed to approximately 10 km/h (6 mph).
5. The ABS is normal if the ABS indicator goes off.

MCS INFORMATION

- The MCS can read out and erase the DTC.

How to connect the MCS

Remove the main seat (page 2-4).

Turn the ignition switch OFF.

Remove the DLC [1] from the dummy connector [2].

Connect the MCS to the DLC.

Turn the ignition switch ON with the engine stop switch ○ and check the DTC.

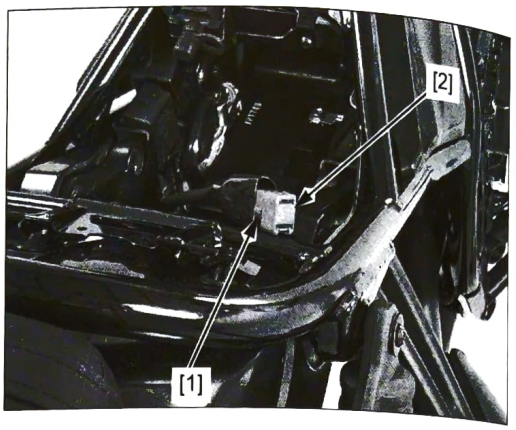

DTC READOUT

NOTE:

- The DTC is not erased by turning the ignition switch OFF while the DTC is being output. Note that turning the ignition switch ON again does not indicate the DTC. To show the DTC again, repeat the DTC readout procedures from the beginning.
- Be sure to record the indicated DTC(s).
- After diagnostic troubleshooting, erase the DTC and perform the pre-start self-diagnosis procedure to be sure that there is no problem in the ABS (page 20-5).
- Do not apply the brake during DTC readout.

Connect the MCS to the DLC (page 20-6).

Read the DTC and follow the DTC index (page 20-9).

- If the MCS is not available, perform the following.

Reading DTC with the ABS indicator

Remove the main seat (page 2-4).

Turn the ignition switch OFF.

Remove the DLC [1] from the dummy connector [2] and short the DLC terminals using the below special tool.

TOOL:

[3] SCS short connector — **070MZ-0010300 or 070MZ-001A300 (U.S.A. only**

CONNECTION: Brown – Green

Turn the ignition switch ON with the engine stop switch to ○.

The ABS indicator should come on 2 seconds (start signal) (then goes off 3.6 seconds) and starts DTC indication.

The DTC is indicated by the number of times the ABS indicator is blinking.
If the DTC is not stored, the ABS indicator stays on.

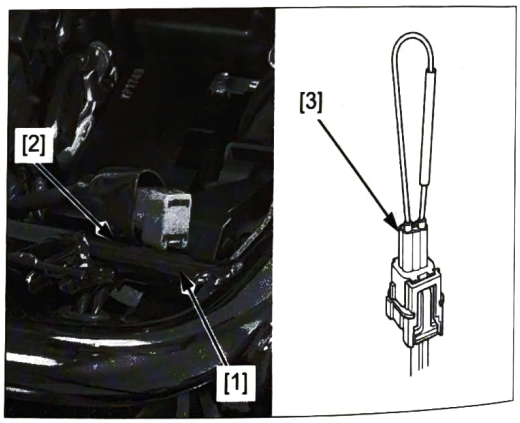

DTC INDICATION PATTERN

NOTE:

- The ABS indicator indicates the DTC by blinking a specified number of times. The indicator has two types of blinking, a long blink and short blink. The long blink lasts for 1.3 seconds, the short blink lasts for 0.3 seconds. For example, when one long blink is followed by two short blinks, the DTC is 1-2 (one long blink = 1 blink, plus two short blinks = 2 blinks).
- When the ABS control unit stores some DTCs, the ABS indicator shows the DTCs in the order from the lowest number to highest number. For example, when the ABS indicator indicates DTC 1-2, then indicates DTC 2-3, two failures have occurred.

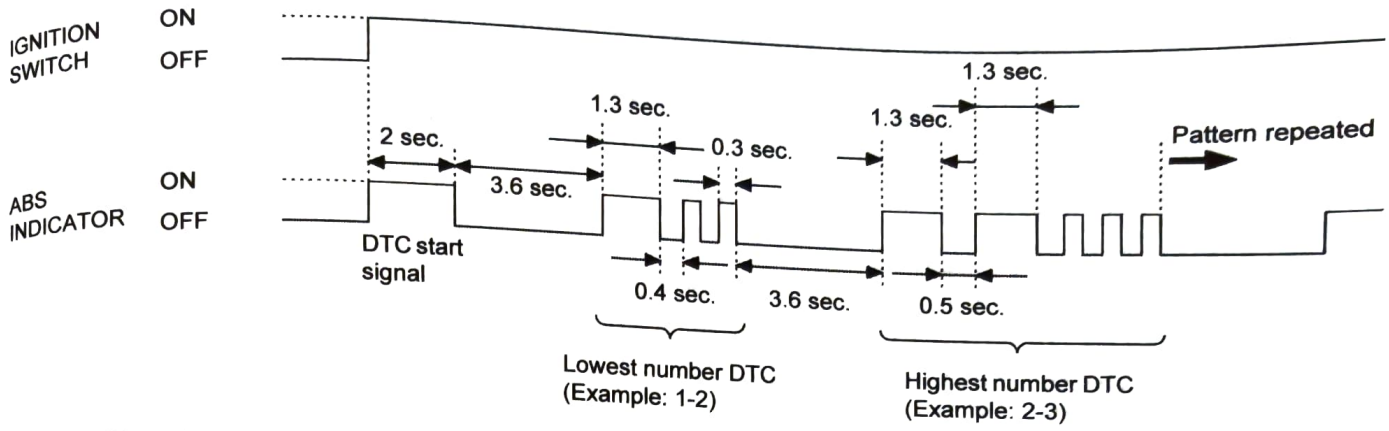

When the DTC is not stored:



ERASING STORED DTC

NOTE:

- The stored DTC can not be erased by simply disconnecting the battery negative cable.

Erase the DTC with the MCS while the engine is stopped.

How to erase the DTC without MCS

1. Connect the SCS short connector [1] to the DLC (page 20-6).
2. While squeezing the brake lever, turn the ignition switch ON with the engine stop switch to ○. The ABS indicator should come on for 2 seconds and go off.
3. Release the brake lever immediately after the ABS indicator goes off. The ABS indicator should come on.
4. Squeeze the brake lever immediately after the ABS indicator comes on. The ABS indicator should go off.
5. Release the brake lever immediately after the ABS indicator goes off.

   When the DTC is erased, the ABS indicator blinks 2 times and stays on. If the ABS indicator does not blink 2 times, the self-diagnostic memory has not been erased, so try again.
6. Turn the ignition switch OFF and remove the SCS short connector from the DLC.

   Install the main seat (page 2-4).

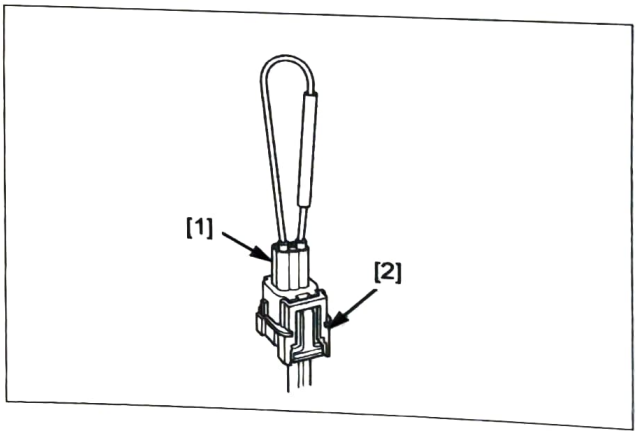

CIRCUIT INSPECTION

INSPECTION AT ABS MODULATOR CONNECTOR

Remove the air cleaner housing (page 7-10).

Turn the ignition switch OFF.

Disconnecting procedure:
Turn the lock lever [1] as shown while pressing the lock tab to release it.
Be sure the lock lever is turned all the way and disconnect the ABS modulator 18P (Black) connector [2].

Connecting procedure:
Be sure to seat the lock lever against the wire side of the connector fully.
Connect the ABS modulator 18P (Black) connector by pressing it straight at the area as shown (arrow) until the lock tab clicks.
Make sure the connector is locked securely.

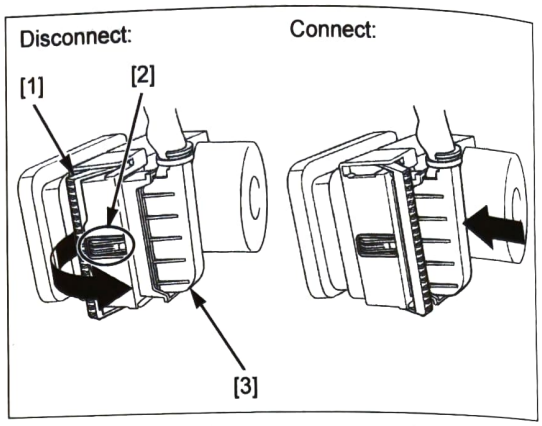

- Always clean around and keep any foreign material away from the connector before disconnecting it.
- A faulty ABS is often related to poorly connected or corroded connections. Check those connections before proceeding.
- In testing at ABS modulator 18P (Black) connector terminals (wire harness side; except No. 9 and No. 18 terminals), always use the test probe [1]. Insert the test probe into the connector terminal, then connect the digital multimeter probe to the test probe.

TOOL:
Test probe, 2 pack **07ZAJ-RDJA110**

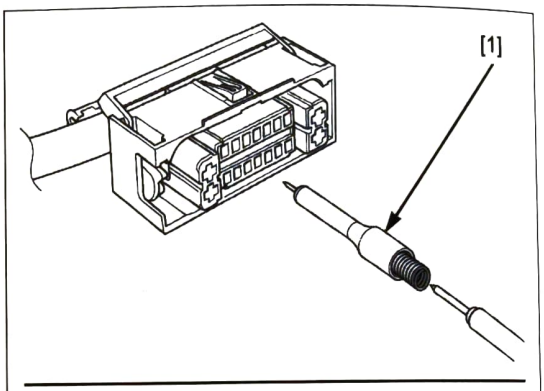

TERMINAL LAYOUT:

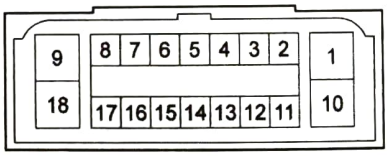

(Terminal side of the wire harness)

DTC INDEX

NOTE:

- The ABS indicator might blink in the following cases. Correct the faulty part.
  - Incorrect tire pressure.
  - Tires not recommended for the motorcycle were installed (incorrect tire size).
  - Deformation of the wheel or tire.
- The ABS indicator might blink while riding under the following conditions. This is a temporary failure. Be sure to erase the DTC (page 20-7).
  Then, test-ride the motorcycle above 30 km/h (19 mph) and check the DTC (page 20-6). Ask the rider for the riding conditions in detail when the motorcycle is brought in for inspection.
  - The motorcycle has continuously been operated on bumpy roads.
  - The front wheel leaves the ground for a long time when riding (wheelie).
  - Only either the front or rear wheel rotates.
  - The ABS operates continuously.
  - The ABS control unit has been disrupted by an extremely powerful radio wave (electromagnetic interference).

DTC	Function failure	Detection		Symptom/Fail-safe function	Refer to
		A	B		
–	ABS indicator malfunction • ABS modulator voltage input line • Indicator related wires • speedometer • ABS modulator • ABS MAIN fuse (10 A)			• ABS indicator never comes ON at all	20-11
				• ABS indicator stays ON at all	20-11
1-1	Front wheel speed sensor circuit malfunction • Wheel speed sensor or related wires	O	O	• Stops ABS operation	20-14
1-2	Front wheel speed sensor malfunction • Wheel speed sensor, pulser ring or related wires • Electromagnetic interference		O	• Stops ABS operation	20-14
1-3	Rear wheel speed sensor circuit malfunction • Wheel speed sensor or related wires	O	O	• Stops ABS operation	20-15
1-4	Rear wheel speed sensor malfunction • Wheel speed sensor, pulser ring or related wires • Electromagnetic interference		O	• Stops ABS operation	20-15
2-1	Front pulser ring • Pulser ring or related wires		O	• Stops ABS operation	20-14
2-3	Rear pulser ring • Pulser ring or related wires		O	• Stops ABS operation	20-15
3-1 3-2 3-3 3-4	Solenoid valve malfunction (ABS modulator)	O	O	• Stops ABS operation	20-17
4-1	Front wheel lock • Riding condition		O	• Stops ABS operation	20-14
4-2	Front wheel lock (Wheelie) • Riding condition		O		
4-3	Rear wheel lock • Riding condition		O	• Stops ABS operation	20-15
5-1	Pump motor lock • Pump motor (ABS modulator) or related wires • ABS MOTOR fuse (30 A)	O	O	• Stops ABS operation	20-18
5-2	Pump motor stuck off • Pump motor (ABS modulator) or related wires • ABS MOTOR fuse (30 A)	O	O	• Stops ABS operation	20-18
5-3	Pump motor stuck on • Pump motor (ABS modulator) or related wires • ABS MOTOR fuse (30 A)	O	O	• Stops ABS operation	20-18
5-4	Fail safe relay malfunction • Fail safe relay (ABS modulator) or related wires • ABS FSR fuse (20 A)	O	O	• Stops ABS operation	20-19

DTC	Function failure	Detection		Symptom/Fail-safe function	Refer to
		A	B		
6-1	Power circuit under voltage • Input voltage (too low) • ABS MAIN fuse (10 A)	O	O	• Stops ABS operation	20-20
6-2	Power circuit over voltage • Input voltage (too high)	O	O	• Stops ABS operation	
7-1	Tire malfunction • Tire size		O	• Stops ABS operation	20-21
8-1	ABS control unit • ABS control unit malfunction (ABS modulator)	O	O	• Stops ABS operation	20-21

(A) Pre-start self-diagnosis (page 20-5).

(B) Ordinary self-diagnosis: diagnoses while the motorcycle is running (after pre-start self-diagnosis)

ABS INDICATOR CIRCUIT TROUBLESHOOTING

ABS INDICATOR DOES NOT COME ON (when the ignition switch turned ON)

NOTE:

- Before starting this inspection, check the initial operation of the speedometer (page 22-8).

1. Indicator Operation Inspection

Turn the ignition switch OFF.
Disconnect the ABS modulator 18P (Black) connector (page 20-8).
Turn the ignition switch ON with the engine stop switch ○.
Check the ABS indicator.

Does the ABS indicator come on?

YES – Faulty ABS modulator

NO – GO TO STEP 2.

2. Indicator Signal Line Short Circuit Inspection

Turn the ignition switch OFF.
Check for continuity between the wire harness side ABS modulator 18P (Black) connector [1] terminal and ground.

TOOL:
Test probe, 2 pack **07ZAJ-RDJA110**

CONNECTION: 13 – Ground

Is there continuity?

YES – Short circuit in the Orange/blue wire

NO – Faulty speedometer

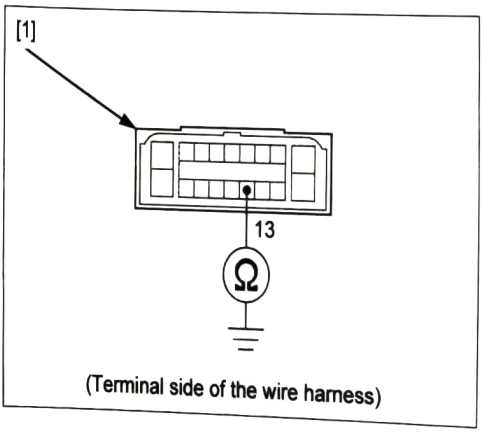

(Terminal side of the wire harness)

ABS INDICATOR STAYS ON (Indicator does not go off when the motorcycle is running)

1. Service Check Line Short Circuit Inspection

Turn the ignition switch OFF.
Disconnect the ABS modulator 18P (Black) connector (page 20-8).
Check for continuity between the wire harness side ABS modulator 18P (Black) connector [1] terminal and ground.

TOOL:
Test probe, 2 pack **07ZAJ-RDJA110**

CONNECTION: 14 – Ground

Is there continuity?

YES – Short circuit in the Brown wire

NO – GO TO STEP 2.

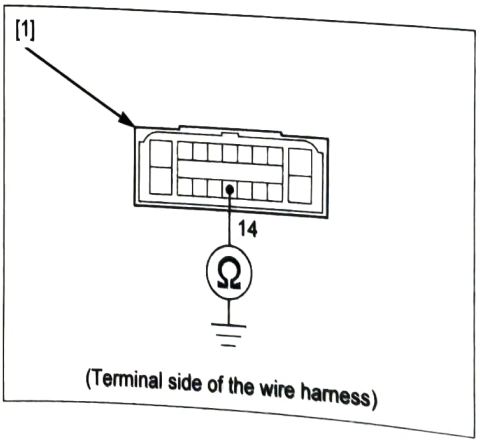

(Terminal side of the wire harness)

2. Indicator Signal Line Open Circuit Inspection

Short the wire harness side ABS modulator 18P (Black) connector [1] terminal to the ground with a jumper wire [2].

TOOL:
Test probe, 2 pack **07ZAJ-RDJA110**

CONNECTION: 13 – Ground

Turn the ignition switch ON with the engine stop switch ○.
Check the ABS indicator.

Does it go off?

YES – GO TO STEP 3.

NO – • Open circuit in the Orange/blue wire
• Faulty speedometer (if the Orange/blue wire is OK)

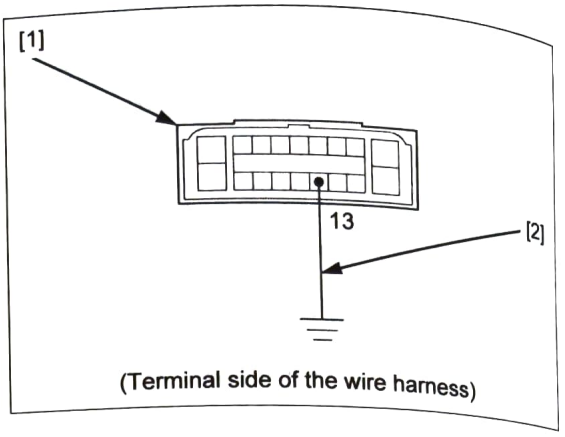

(Terminal side of the wire harness)

3. Modulator Ground Line Open Circuit Inspection

Turn the ignition switch OFF.
Check for continuity between the wire harness side ABS modulator 18P (Black) connector [1] terminal and ground.

CONNECTION: 10 – Ground

Is there continuity?

YES – GO TO STEP 4.

NO – Open circuit in the Green/yellow wire

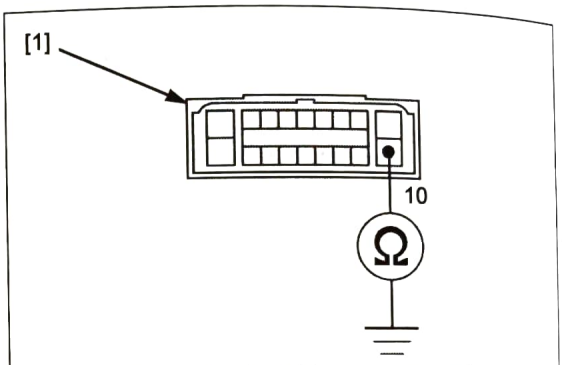

(Terminal side of the wire harness)

4. Fuse Inspection

Remove the left side cover (page 2-4).

Check the ABS MAIN fuse (10 A) [1] for blown.

Is the fuse blown?

YES – GO TO STEP 5.

NO – GO TO STEP 6.

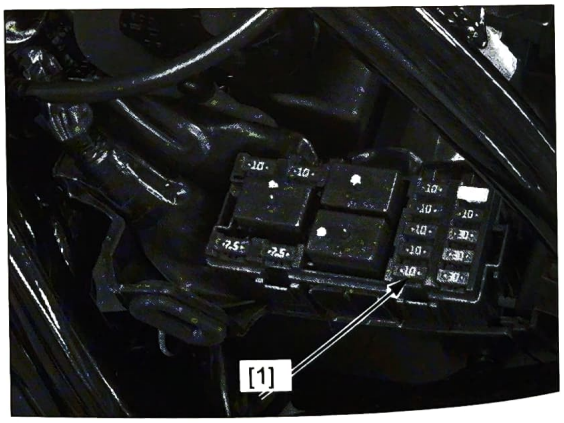

5. Power Input Line Short Circuit Inspection

With the ABS MAIN fuse (10 A) removed, check for continuity between the wire harness side ABS modulator 18P (Black) connector [1] and ground.

TOOL:
Test probe, 2 pack **07ZAJ-RDJA110**

CONNECTION: 7 – Ground

Is there continuity?

YES – Short circuit in Red/black wire

NO – Intermittent failure. Replace the ABS MAIN fuse (10 A) with a new one, and recheck.

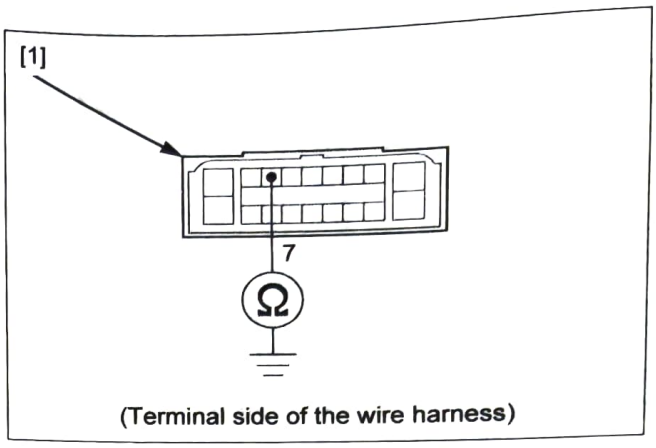

(Terminal side of the wire harness)

6. Power Input Line Open Circuit Inspection

Install the ABS MAIN fuse (10 A).
Turn the ignition switch ON with the engine stop switch ○.
Measure the voltage between the wire harness side ABS modulator 18P (Black) connector [1] terminal and ground.

TOOL:
Test probe, 2 pack **07ZAJ-RDJA110**

CONNECTION: 7 (+) – Ground (–)

Is there battery voltage?

YES – Faulty ABS modulator

NO – Open circuit in Red/green wire

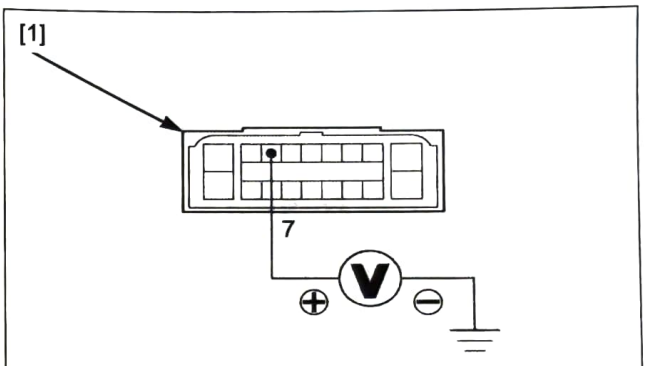

(Terminal side of the wire harness)

ABS TROUBLESHOOTING

NOTE:

- Perform inspection with the ignition switch OFF, unless otherwise specified.
- All connector diagrams in the troubleshooting are viewed from the terminal side.
- Use a fully charged battery. Do not diagnose with a charger connected to the battery.
- When the ABS modulator assembly is detected to be faulty, recheck the wire harness and connector connections closely before replacing it.
- After diagnostic troubleshooting, erase the DTC (page 20-7).
  Then test-ride the motorcycle to check that the ABS indicator operates normally during pre-start self-diagnosis (page 20-5).

DTC 1-1, 1-2, 2-1, 4-1 or 4-2 (Front Wheel Speed Sensor Circuit/Front Wheel Speed Sensor/Front Pulser Ring/Front Wheel Lock)

NOTE:

- The ABS indicator might blink under unusual riding conditions (page 20-9). This is a temporary failure. Erase the DTC (page 20-7). Then test-ride the motorcycle above 10 km/h (6 mph) check that the ABS indicator operates normally (page 20-5).
- If the DTC 4-1 is indicated, check the front brake for drag.

1. Front Speed Sensor Air Gap Inspection

Measure the air gap between the speed sensor and pulser ring (page 20-22).

Is the air gap correct?

YES – GO TO STEP 2.

NO – Check each part for deformation and looseness and correct accordingly. Recheck the air gap.

2. Front Speed Sensor Condition Inspection

Inspect the area around the front wheel speed sensor:
Check that there is iron or other magnetic deposits between the pulser ring [1] and wheel speed sensor [2], and the pulser ring slots for obstructions.
Check the installation condition of the pulser ring or wheel speed sensor for looseness.
Check the pulser ring and sensor tip for deformation or damage (e.g., chipped pulser ring teeth).

Are the sensor and pulser ring in good condition?

YES – GO TO STEP 3.

NO – Remove any deposits. Install properly or replace faulty part.

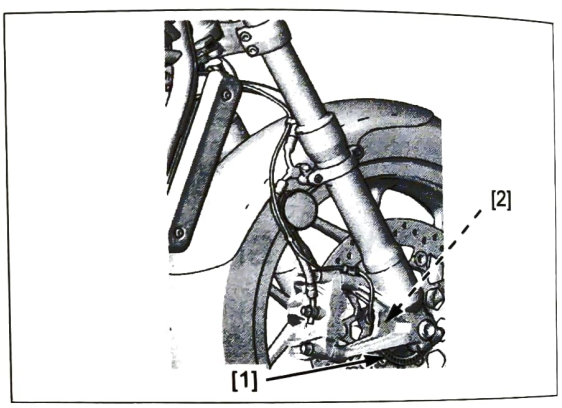

3. Front Wheel Speed Sensor Line Short Circuit Inspection (at sensor side)

Turn the ignition switch OFF.
Disconnect the front wheel speed sensor 2P (Black) connector (page 20-22).
Check for continuity between each terminal of the sensor side front wheel speed sensor 2P (Black) connector [1] and ground.

CONNECTION: White – Ground
Blue – Ground

Is there continuity?

YES – Faulty front wheel speed sensor

NO – GO TO STEP 4.

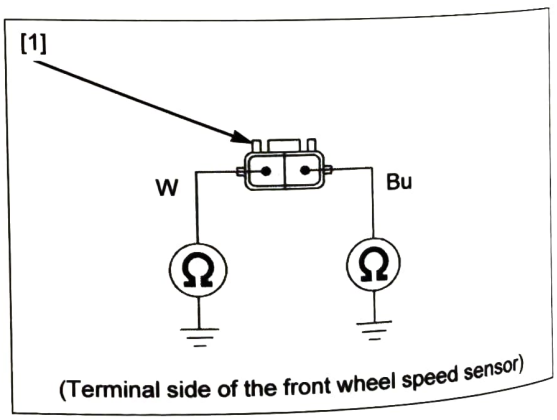

(Terminal side of the front wheel speed sensor)

4. **Front Wheel Speed Sensor Line Short Circuit Inspection**

Disconnect the ABS modulator 18P (Black) connector (page 20-8).
Check for continuity between each terminal of the wire harness side front wheel speed sensor 2P (Black) connector [1] and ground.

CONNECTION: Blue – Ground
White – Ground

Is there continuity?

YES – • Short circuit in the Blue wire
• Short circuit in the White wire

NO – GO TO STEP 5.

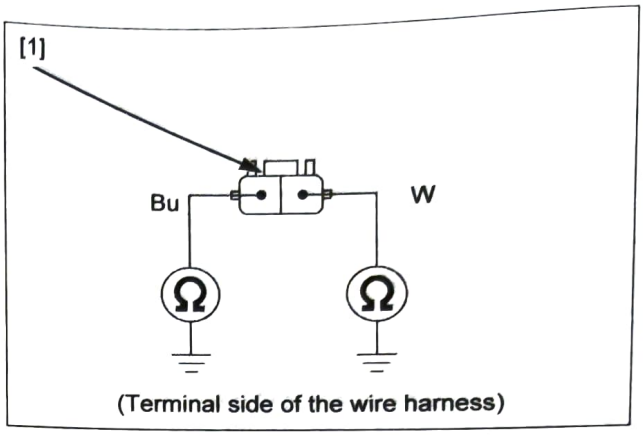

(Terminal side of the wire harness)

5. **Front Wheel Speed Sensor Line Open Circuit Inspection**

Short the wire harness side ABS modulator 18P (Black) connector [1] terminals with a jumper wire [2].

CONNECTION: 8 – 17

Check for continuity between the wire harness side front wheel speed sensor 2P (Black) connector [3] terminals.

CONNECTION: Blue – White

Is there continuity?

YES – GO TO STEP 6.

NO – Open circuit in the Blue or White wire

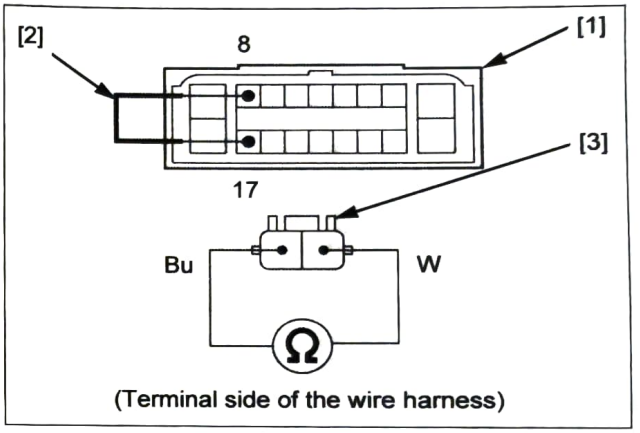

(Terminal side of the wire harness)

6. **Failure Reproduction with a New Speed Sensor**

Replace the front wheel speed sensor with a new one (page 20-22).
Connect the ABS modulator 18P (Black) and front wheel speed sensor 2P (Black) connectors.
Erase the DTC (page 20-7).
Test-ride the motorcycle above 10 km/h (6 mph).
Recheck the DTC (page 20-6).

Is the DTC 1-1, 1-2, 2-1, 4-1 or 4-2 indicated?

YES – Faulty ABS modulator

NO – Faulty original wheel speed sensor

DTC 1-3, 1-4, 2-3 or 4-3 (Rear Wheel Speed Sensor Circuit/Rear Wheel Speed Sensor/Rear Pulser Ring/Rear Wheel Lock)

NOTE:

- The ABS indicator might blink under unusual riding conditions (page 20-9). This is a temporary failure.
  Erase the DTC (page 20-7).
  Then test-ride the motorcycle above 10 km/h (6 mph) check that the ABS indicator operates normally (page 20-5).
- If the DTC 4-3 is indicated, check the front brake for drag.

1. **Speed Sensor Air Gap Inspection**

   Measure the air gap between the speed sensor and pulser ring (page 20-22).

   Is the air gap correct?

   YES – GO TO STEP 2.

   NO – Check each part for deformation and looseness and correct accordingly. Recheck the air gap.

2. **Rear Speed Sensor Condition Inspection**

   Inspect the area around the rear wheel speed sensor:
   Check that there is iron or other magnetic deposits between the pulser ring [1] and wheel speed sensor [2], and the pulser ring slots for obstructions.
   Check the installation condition of the pulser ring or wheel speed sensor for looseness.
   Check the pulser ring and sensor tip for deformation or damage (e.g., chipped pulser ring teeth).

   Are the sensor and pulser ring in good condition?

   YES – GO TO STEP 3.

   NO – Remove any deposits. Install properly or replace faulty part.

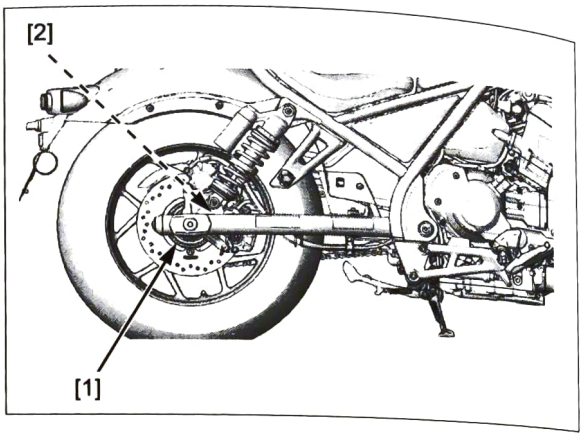

3. **Rear Wheel Speed Sensor Line Short Circuit Inspection (at sensor side)**

   Turn the ignition switch OFF.
   Remove the right side cover (page 2-4).
   Disconnect the rear wheel speed sensor 2P (Black) connector [1].



   Check for continuity between each terminal of the sensor side rear wheel speed sensor 2P (Black) connector [1] and ground.

   CONNECTION: Blue – Ground
   White – Ground

   Is there continuity?

   YES – Faulty rear wheel speed sensor

   NO – GO TO STEP 4.

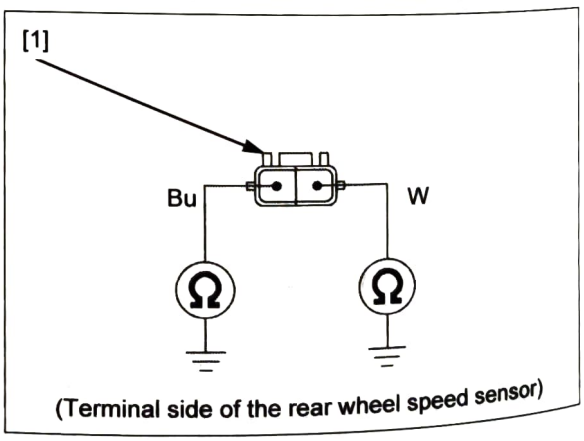

(Terminal side of the rear wheel speed sensor)

4. **Rear Wheel Speed Sensor Line Short Circuit Inspection**

Disconnect the ABS modulator 18P (Black) connector (page 20-8).
Check for continuity between each terminal of the wire harness side rear wheel speed sensor 2P (Gray) connector [1] and ground.

CONNECTION: Blue – Ground
White – Ground

Is there continuity?

YES – • Short circuit in the White wire
• Short circuit in the Blue wire

NO – GO TO STEP 5.

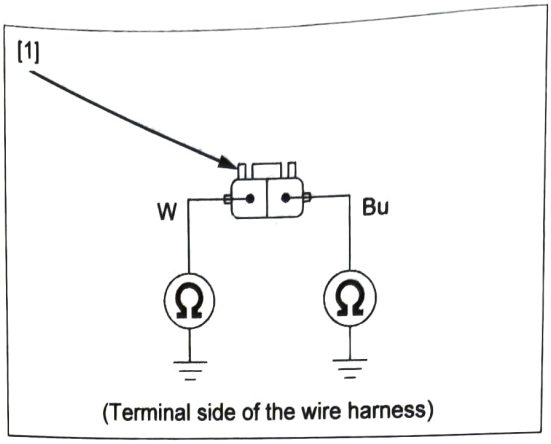

(Terminal side of the wire harness)

5. **Rear Wheel Speed Sensor Line Open Circuit Inspection**

Short the wire harness side ABS modulator 18P (Black) connector [1] terminals with a jumper wire [2].

CONNECTION: 6 – 15

Check for continuity between the wire harness side rear wheel speed sensor 2P (Black) connector [3] terminals.

CONNECTION: White – Blue

Is there continuity?

YES – GO TO STEP 6.

NO – Open circuit in the White or Blue wire

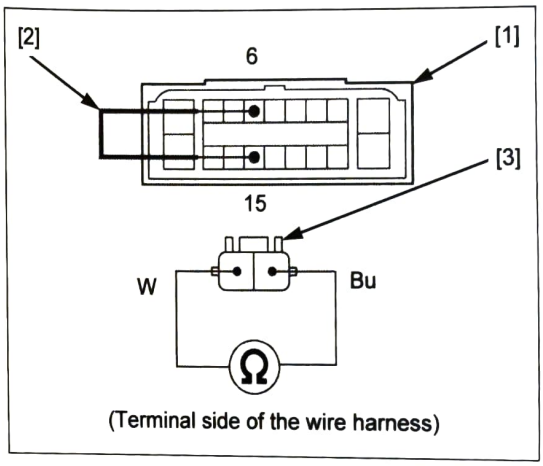

(Terminal side of the wire harness)

6. **Failure Reproduction with a New Speed Sensor**

Replace the rear wheel speed sensor with a new one (page 20-22).
Connect the ABS modulator 18P (Black) and rear wheel speed sensor 2P (Black) connectors.
Erase the DTC (page 20-7).
Test-ride the motorcycle above 10 km/h (6 mph).
Recheck the DTC (page 20-6).

Is the DTC 1-3, 1-4, 2-3, or 4-3 indicated?

YES – Faulty ABS modulator

NO – Faulty original wheel speed sensor

DTC 3-1, 3-2, 3-3 or 3-4 (Solenoid Valve)

1. **Failure Reproduction**

Erase the DTC (page 20-7).
Test-ride the motorcycle above 10 km/h (6 mph).
Recheck the DTC (page 20-6).

Is the DTC 3-1, 3-2, 3-3 or 3-4 indicated?

YES – Faulty ABS modulator

NO – Solenoid valve is normal (intermittent failure).

DTC 5-1, 5-2 or 5-3 (Pump Motor Lock/ Stuck Off/Stuck On)

1. **Fuse Inspection**

Turn the ignition switch OFF.
Remove the left side cover (page 2-4).
Check the ABS MOTOR fuse (30 A) [1] for blown.

Is the fuse blown?

YES – GO TO STEP 2.

NO – GO TO STEP 3.

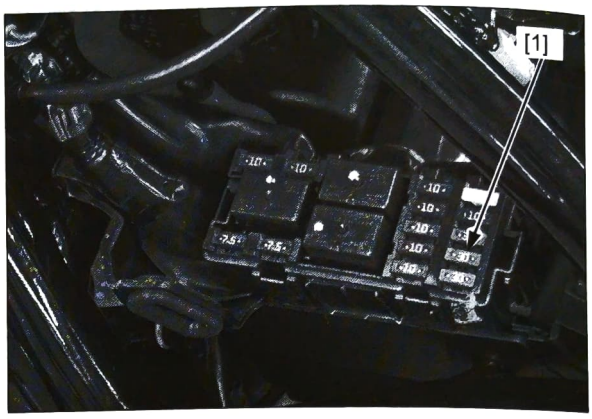

2. **Motor Power Input Line Short Circuit Inspection**

Disconnect the ABS modulator 18P (Black) connector (page 20-8).
With the ABS MOTOR fuse (30 A) removed, check for continuity between the wire harness side ABS modulator 18P (Black) connector [1] terminal and ground.

TOOL:
Test probe, 2 pack **07ZAJ-RDJA110**

CONNECTION: 9 – Ground

Is there continuity?

YES – Short circuit in the Violet/white wire between the fuse box and ABS modulator 18P (Black) connector

NO – Intermittent failure. Replace the ABS MOTOR fuse (30 A) with a new one, and recheck.

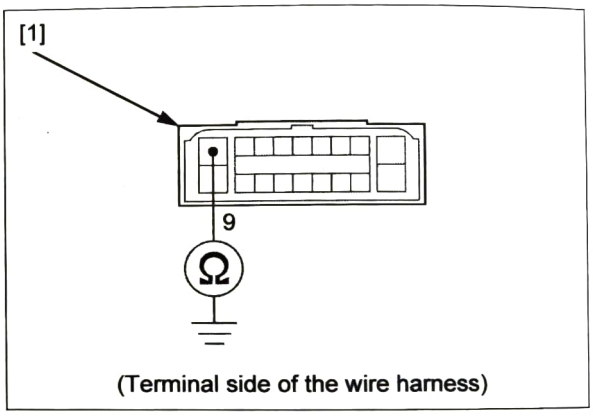

(Terminal side of the wire harness)

3. **Motor Power Input Line Open Circuit Inspection**

Install the ABS MOTOR fuse (30 A).
Disconnect the ABS modulator 18P (Black) connector (page 20-8).
Measure the voltage between the wire harness side ABS modulator 18P (Black) connector [1] terminal and ground.

TOOL:
Test probe, 2 pack **07ZAJ-RDJA110**

CONNECTION: 9 (+) – Ground (–)

Is there battery voltage?

YES – GO TO STEP 4.

NO – Open circuit in the Red or Violet/white wire between the battery and ABS modulator 18P (Black) connector

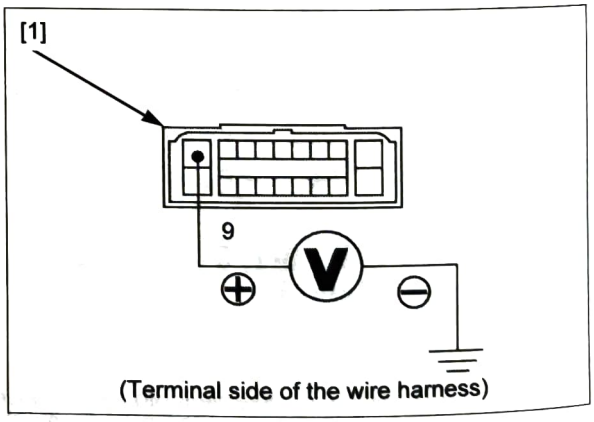

(Terminal side of the wire harness)

4. Failure Reproduction

Turn the ignition switch OFF.
Connect the ABS modulator 18P (Black) connector.
Erase the DTC (page 20-7).
Test-ride the motorcycle above 10 km/h (6 mph).
Recheck the DTC (page 20-6).

Is the DTC 5-1, 5-2 or 5-3 indicated?

YES – Faulty ABS modulator

NO – Pump motor is normal (intermittent failure).

DTC 5-4 (Fail Safe Relay)

1. Fuse Inspection

Turn the ignition switch OFF.
Remove the main seat (page 2-4).
Check the ABS FSR (20 A) [1] for blown.

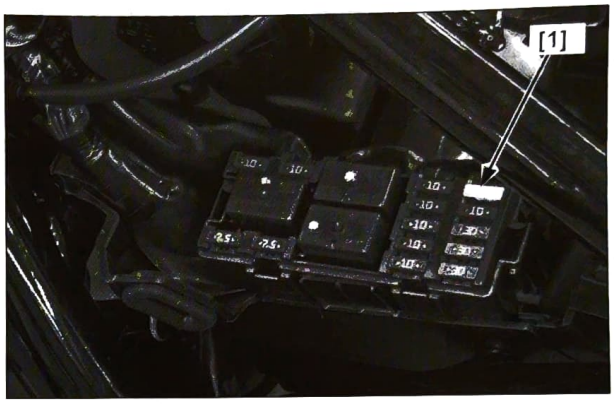

Is the fuse blown?

YES – GO TO STEP 2.

NO – GO TO STEP 3.

2. Relay Input Line Short Circuit Inspection

Disconnect the ABS modulator 18P (Black) connector (page 20-8).
With the ABS FSR (20 A) removed, check for continuity between the wire harness side ABS modulator 18P (Black) connector [1] terminal and ground.

TOOL:
Test probe, 2 pack **07ZAJ-RDJA110**

CONNECTION: 18 – Ground

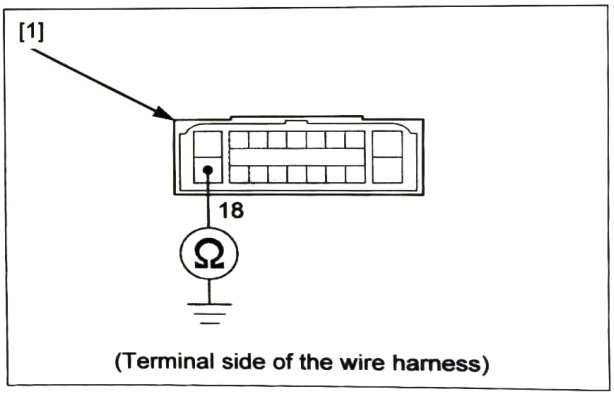

Is there continuity?

YES – Short circuit in the Red/green wire between the fuse box and ABS modulator 18P (Black) connector

NO – Intermittent failure. Replace the ABS FSR fuse (20 A) with a new one, and recheck.

3. **Relay Input Line Open Circuit Inspection**

Install the ABS FSR fuse (20 A).
Disconnect the ABS modulator 18P (Black) connector (page 20-8).
Measure the voltage between the wire harness side ABS modulator 18P (Black) connector [1] terminal and ground.

TOOL:
Test probe, 2 pack **07ZAJ-RDJA110**

CONNECTION: 18 (+) – Ground (–)

Is there battery voltage?

YES – GO TO STEP 4.

NO – Open circuit in the Black, White, Red or Red/green wire between the battery and ABS modulator 18P (Black) connector

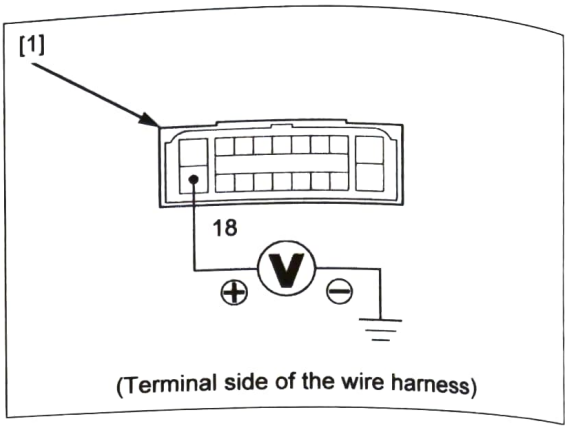

4. **Failure Reproduction**

Turn the ignition switch OFF.
Connect the ABS modulator 18P (Black) connector.
Erase the DTC (page 20-7).
Test-ride the motorcycle above 10 km/h (6 mph).
Recheck the DTC (page 20-6).

Is the DTC 5-4 indicated?

YES – Faulty ABS modulator

NO – Fail safe relay is normal (intermittent failure).

DTC 6-1 or 6-2 (Power Circuit)

1. **Fuse Inspection**

Turn the ignition switch OFF.
Remove the main seat (page 2-4)
Check the ABS MAIN fuse (10 A) for blown.

Is the fuse blown?

YES – GO TO STEP 2.

NO – GO TO STEP 3.

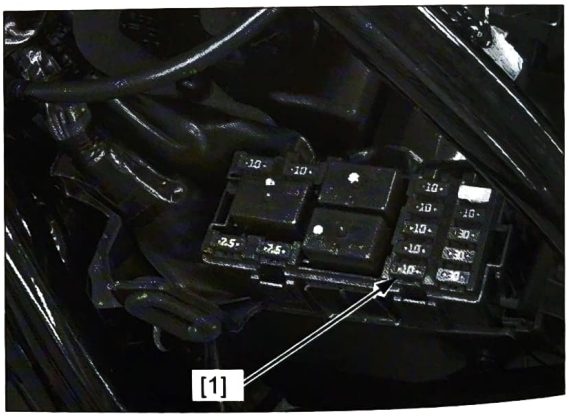

2. **Power Input Line Short Circuit Inspection**

Disconnect the ABS modulator 18P (Black) connector (page 20-8).
With the ABS MAIN fuse (10 A) removed, check for continuity between the wire harness side ABS modulator 18P (Black) connector [1] and ground.

TOOL:
Test probe, 2 pack **07ZAJ-RDJA110**

CONNECTION: 7 – Ground

Is there continuity?

YES – Short circuit in Red/black wire

NO – Intermittent failure. Replace the ABS MAIN fuse (10 A) with a new one, and recheck.

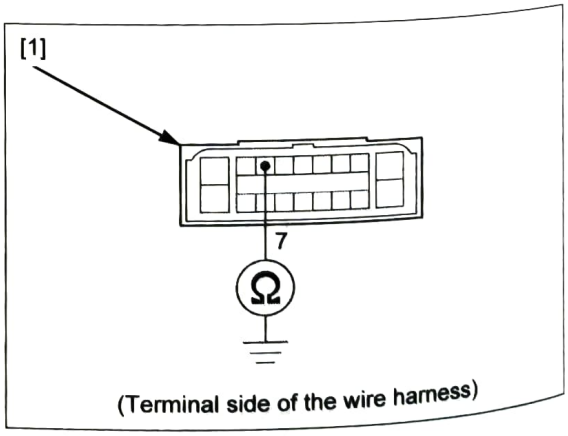

3. **Power Input Line Open Circuit Inspection**

Install the ABS MAIN fuse (10 A).
Disconnect the ABS modulator 18P (Black) connector (page 20-8).
Turn the ignition switch ON with the engine stop switch ○.
Measure the voltage between the wire harness side ABS modulator 18P (Black) connector [1] terminal and ground.

TOOL:
Test probe, 2 pack **07ZAJ-RDJA110**

CONNECTION: 7 (+) – Ground (–)

Is there battery voltage?

YES – GO TO STEP 4.

NO – Open circuit in Black, White, Red or Red/green wire

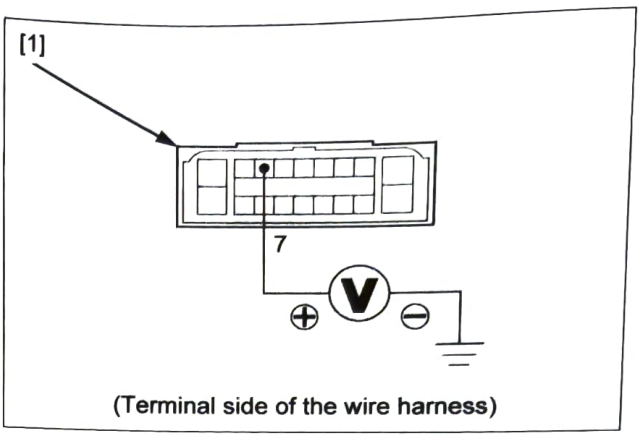

(Terminal side of the wire harness)

4. **Failure Reproduction**

Turn the ignition switch OFF.
Connect the ABS modulator 18P (Black) connector.
Erase the DTC (page 20-7).
Test-ride the motorcycle above 10 km/h (6 mph).
Recheck the DTC (page 20-6).

Is the DTC 6-1 or 6-2 indicated?

YES – Faulty ABS modulator

NO – Power circuit is normal (intermittent failure)

DTC 7-1 (Tire Size)

NOTE:
- Check the following and correct the faulty part.
  - Incorrect tire pressure.
  - Tires not recommended for the motorcycle were installed (incorrect tire size).
  - Deformation of the wheel or tire.

1. **Failure Reproduction**

If the above items are normal, recheck the DTC indication:
Erase the DTC (page 20-7).
Test-ride the motorcycle above 10 km/h (6 mph).
Recheck the DTC (page 20-6).

Is the DTC 7-1 indicated?

YES – Faulty ABS modulator

NO – Tire size is normal (intermittent failure)

DTC 8-1 (ABS Control Unit)

1. **Failure Reproduction**

Erase the DTC (page 20-7).
Test-ride the motorcycle above 10 km/h (6 mph).
Recheck the DTC (page 20-6).

Is the DTC 8-1 indicated?

YES – Faulty ABS modulator

NO – ABS control unit is normal (intermittent failure)

WHEEL SPEED SENSOR

AIR GAP INSPECTION

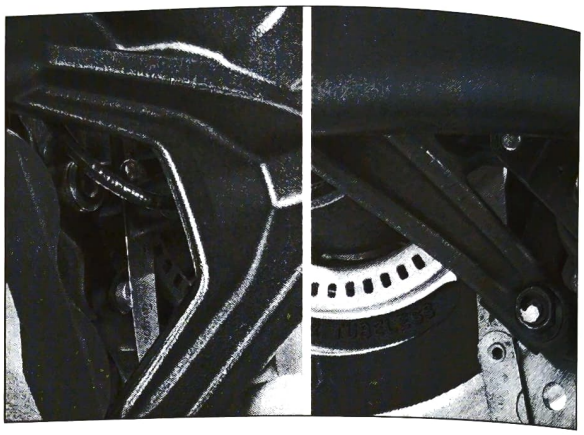

Support the motorcycle securely using a hoist or equivalent and raise the wheels off the ground.

Measure the clearance (air gap) between the caliper bracket and pulser ring at several points by turning the wheel slowly.
It must be within specification.

STANDARD:

Front:	**0.604 – 1.26 mm (0.0238 – 0.0520 in)**
Rear:	**0.667 – 1.100 mm (0.0263 – 0.0433 in)**

The clearance (air gap) cannot be adjusted.
If it is not within specification, check each part for deformation, looseness or damage.

Check the wheel speed sensor for damage, and replace if necessary.

Check the pulse ring for deformation or damage, and replace if necessary.

- Front pulser ring (page 17-15)
- Rear pulser ring (page 18-6)

REPLACEMENT

NOTE:
Refer to procedure for the pulser ring removal/installation.

- Front pulser ring (page 17-15)
- Rear pulser ring (page 18-6)

FRONT WHEEL SPEED SENSOR REMOVAL/INSTALLATION

Remove the front wheel (page 17-14).

Slide the radiator forward (page 4-55).

Release the clip and disconnect front wheel speed sensor 2P (black) connector [2].

Release the sensor wire [3] from the clamp [4].

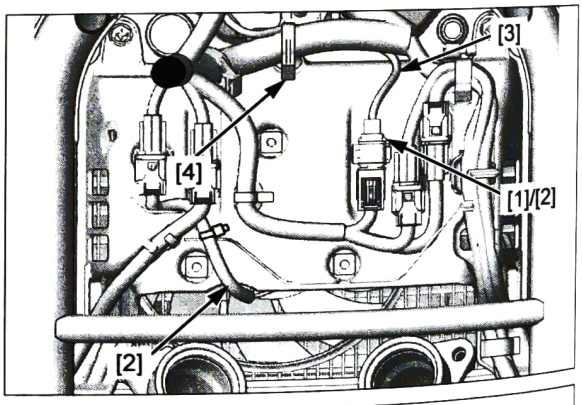

Remove the three bolts [1].

Remove the stay [2] from the front wheel speed sensor wire [3].

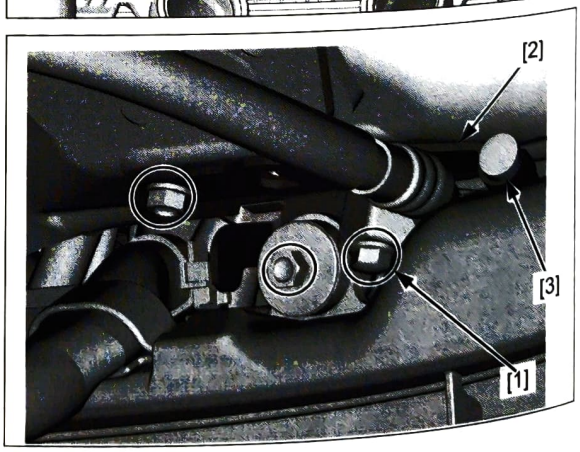

Release the sensor wire [1] from the clamp [2].

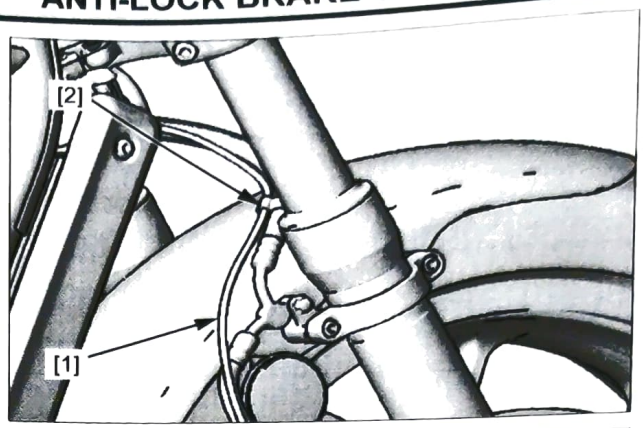

Remove the sensor wire [1] from the clamp [2].

Remove the following:

- bolt [3]
- stay [4]
- sensor wire from the stay
- front wheel speed sensor mounting socket bolt [5]
- sensor cover [6]
- front wheel speed sensor [7]

Installation is in the reverse order of removal.

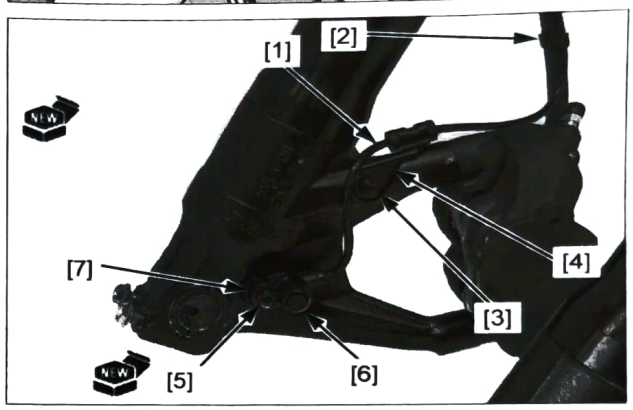

NOTE:

- Clean around the mounting area of the caliper bracket thoroughly, and be sure that no foreign material is allowed to enter the mounting hole.
- Always replace the front brake caliper mounting bolts and front wheel speed sensor mounting bolt with new ones.
- Check the clearance between the caliper bracket and pulser ring, it is 0.604 – 1.26 mm (0.0238 – 0.0520 in).
- The clearance gap cannot be adjusted.
  If it is not within specification, check related part for deformation, looseness, or damage.

TORQUE:

Front wheel speed sensor mounting socket bolt:
9 N·m (0.9 kgf·m, 6.6 lbf·ft)

REAR WHEEL SPEED SENSOR REMOVAL/ INSTALLATION

Remove the following:

- right side cover (page 2-4)
- rear wheel (page 18-5)

Remove the rear wheel speed sensor 2P (Black) connector [1] from the frame and disconnect the connector.



Release the clip [1].

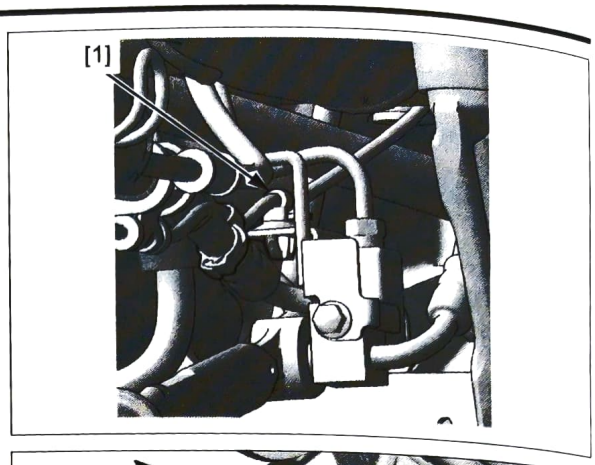

Remove the clamps [1].

Remove the bolt [2] and clamp [3].

Remove the sensor wire [2] from the clamp [3].

Release the sensor wire band bosses [1] from the ABS modulator stay.

Release the sensor wire [2] from the sensor wire stay [3].

Remove the mounting bolt [4] and rear wheel speed sensor [5].

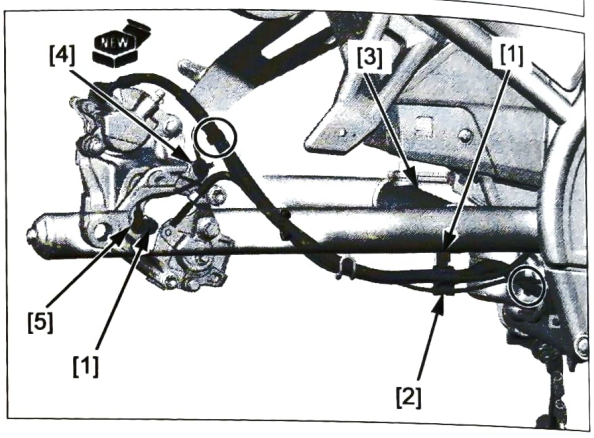

Installation is in the reverse order of removal.

NOTE:

- Clean around the mounting area of the caliper bracket thoroughly, and be sure that no foreign material is allowed to enter the mounting hole.
- Always replace the rear wheel speed sensor mounting bolt with new a one.
- Check the clearance between the caliper bracket and pulser ring, it is 0.667 – 1.100 mm (0.0263 – 0.0433 in).
- The clearance gap cannot be adjusted.
  If it is not within specification, check related part for deformation, looseness, or damage.

ABS MODULATOR

NOTICE

Spilled fluid can damage painted, plastic or rubber parts. Place a rag over these parts whenever the system is serviced.

NOTE:

- When removing the oil bolt, cover the end of the brake hose to prevent contamination.
- Be careful not to bend or damage the brake pipes.

REMOVAL/INSTALLATION

Remove the following:

- throttle body (page 7-11)
- battery case (page 2-12)

Disconnect the following:

- EOT sensor 2P (Black) connector (page 13-62)
- ABS modulator 18P (Black) connector (page 20-8)

Remove the bolt [1] and release the clamp [2].
Pull the wire [3] out from the frame and ABS modulator tray [4].
Remove the socket bolt [5].

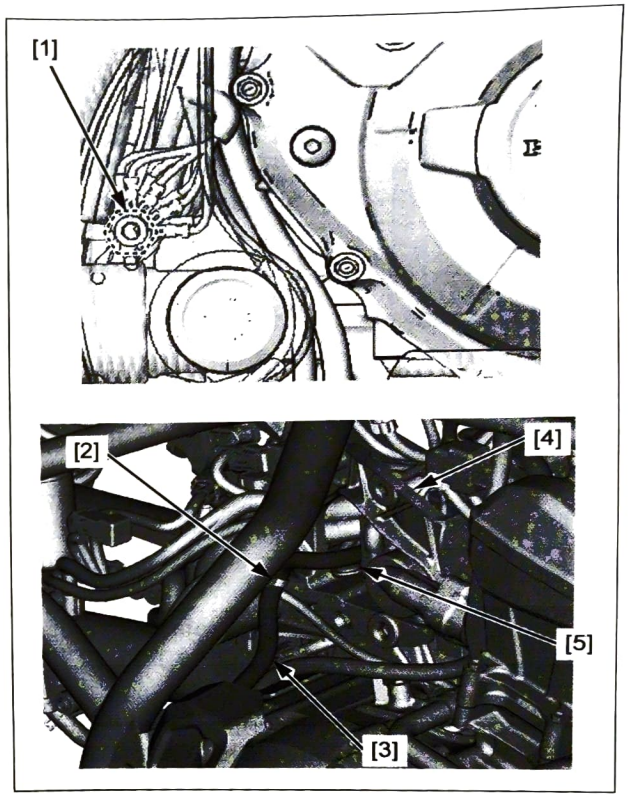

Release the two clips [1] from the ABS modulator tray.

Release the brake pipes [2] from the clamps [3].

Disconnect the sub harness 8P (Black) connector [4].

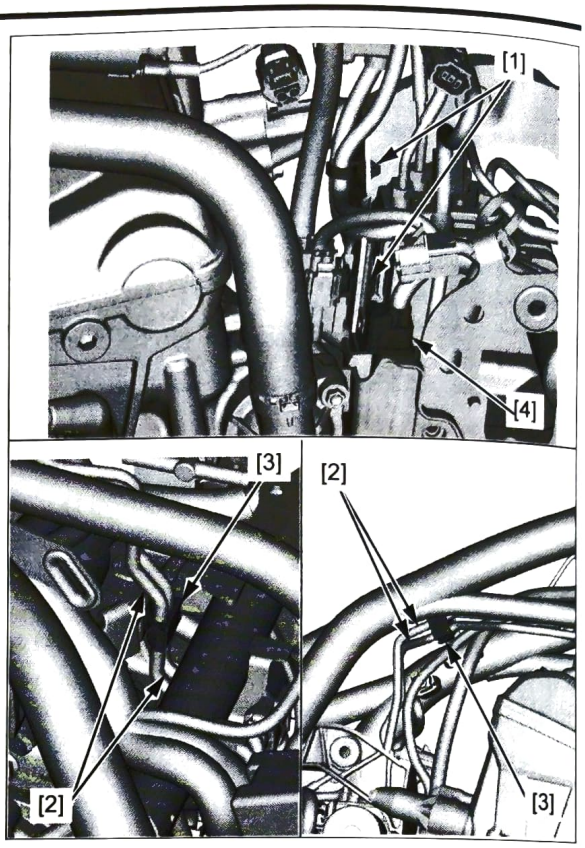

Loosen the joint nuts [1] and disconnect the brake pipes [2] from the ABS modulator [3].

Remove the following:

- two socket bolts [4]
- ABS modulator assembly

Installation is in the reverse order of removal.

TORQUE:

Brake pipe joint nut:
14 N·m (1.4 kgf·m, 10 lbf·ft)

NOTE:

- Apply brake fluid to the joint nuts threads.
- Tighten the joint nuts in numerical order as shown.

Fill and bleed the rear brake hydraulic system (page 19-6)

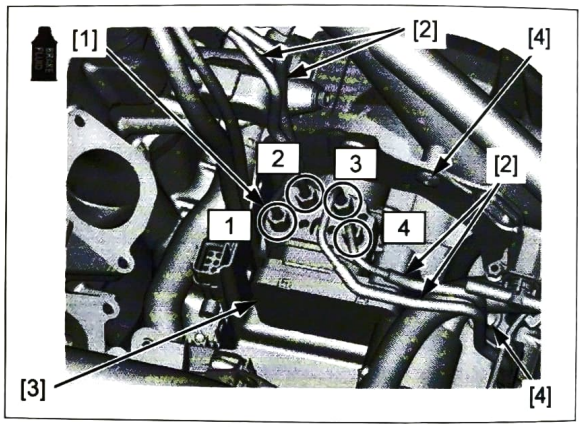

DISASSEMBLY/ASSEMBLY

Remove the following:

- two bolts [1]
- two washers [2]
- two colors [3]
- ABS modulator [4] from the case [5]

Assembly is in the reverse order of disassembly.

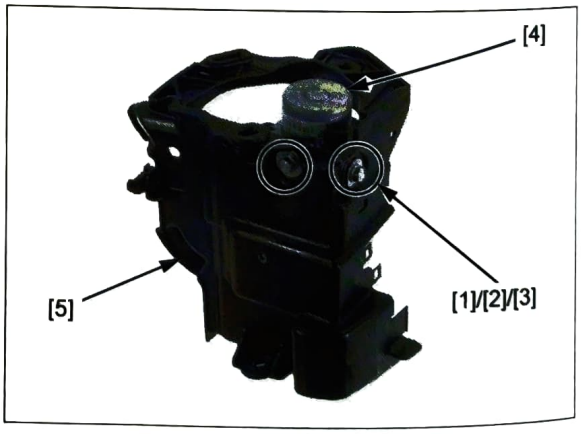

21. BATTERY/CHARGING SYSTEM

SERVICE INFORMATION 21-2
TROUBLESHOOTING 21-3
SYSTEM LOCATION 21-4
SYSTEM DIAGRAM 21-4
BATTERY 21-5
CHARGING SYSTEM INSPECTION 21-6
ALTERNATOR CHARGING COIL 21-7
REGULATOR/RECTIFIER 21-7

SERVICE INFORMATION

GENERAL

⚠WARNING

- The battery gives off explosive gases; keep sparks, flames and cigarettes away. Provide adequate ventilation when charging.
- The battery contains sulfuric acid (electrolyte). Contact with skin or eyes may cause severe burns. Wear protective clothing and a face shield.
  - If electrolyte gets on your skin, flush with water.
  - If electrolyte gets in your eyes, flush with water for at least 15 minutes and call a physician immediately.
- Electrolyte is poisonous.
  - If swallowed, drink large quantities of water or milk and call your local Poison Control Center or a physician immediately.

NOTICE

- *Always turn OFF the ignition switch before disconnecting any electrical component.*
- *Some electrical components may be damaged if terminals or connectors are connected or disconnected while the ignition switch is ON and current is present.*
- For extended storage, remove the battery, give it a full charge, and store it in a cool, dry space. For maximum service life, charge the stored battery every 2 weeks.
- For a battery remaining in a stored motorcycle, disconnect the negative battery cable from the battery terminal.
- The maintenance free battery must be replaced when it reaches the end of its service life.
- The battery can be damaged if overcharged or undercharged, or if left to discharge for a long period. These same conditions contribute to shortening the "life span" of the battery. Even under normal use, the performance of the battery deteriorates after 2 – 3 years.
- Battery voltage may recover after battery charging, but under heavy load, battery voltage will drop quickly and eventually die out. For this reason, the charging system is often suspected as the problem. Battery overcharge often results from problems in the battery itself, which may appear to be an overcharging symptom. If one of the battery cells is shorted and battery voltage does not increase, the regulator/rectifier supplies excess voltage to the battery. Under these conditions, the electrolyte level goes down quickly.
- Before troubleshooting the charging system, check for proper use and maintenance of the battery. Check if the battery is frequently under heavy load, such as having the headlight and tail light ON for long periods of time without riding the motorcycle.
- The battery will self-discharge when the motorcycle is not in use. For this reason, charge the battery every 2 weeks to prevent sulfation from occurring.
- When checking the charging system, always follow the steps in the troubleshooting flow chart (page 21-3).
- For alternator removal (page 11-4).

BATTERY CHARGING

- Turn power ON/OFF at the charger, not at the battery terminal.
- For battery charging, do not exceed the charging current and time specified on the battery. Using excessive current or extending the charging time may damage the battery.
- Quick charging should only be done in an emergency; slow charging is preferred.

BATTERY TESTING

Refer to the instruction of the Operation Manual for the recommended battery tester for details about battery testing. The recommended battery tester puts a "load" on the battery so the actual battery condition can be measured.

RECOMMENDED BATTERY TESTER: MDX604P (U.S.A. only)

TOOLS

Motorcycle battery analyzer MDX604P (U.S.A. only)	Optimate PRO-4 Battery Charger TMNTS53 (U.S.A. only)
	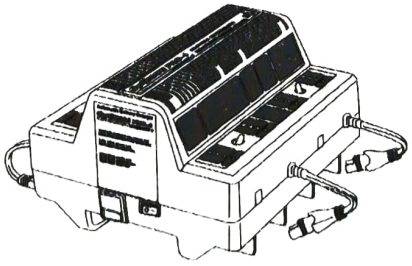

TROUBLESHOOTING

BATTERY IS DAMAGED OR WEAK

1. BATTERY TEST

Remove the battery (page 21-5).

Check the battery condition using a recommended battery tester.

RECOMMENDED BATTERY TESTER: MDX604P (U.S.A. only)

Is the battery in good condition?

YES – GO TO STEP 2.

NO – Faulty battery

2. CURRENT LEAKAGE TEST

Install the battery (page 21-5).

Check the battery current leakage test (Leak test; page 21-6).

Is the specified current leakage (0.2mA maximum)?

YES – GO TO STEP 4.

NO – GO TO STEP 3.

3. CURRENT LEAKAGE TEST WITHOUT REGULATOR/RECTIFIER CONNECTED

Disconnect the regulator/rectifier 3P connector and recheck the battery current leakage.

Is the specified current leakage (0.2 mA maximum)?

YES – Faulty regulator/rectifier

NO –
- Shorted wire harness
- Faulty ignition switch

4. CHARGING VOLTAGE INSPECTION

Measure and record the battery voltage using a digital multimeter (page 21-5).

Start the engine.

Measure the charging voltage (page 21-6).

Compare the measurements to the results of the following calculation.

STANDARD:

Measured BV < Measured CV < 15.5 V
- **BV = Battery Voltage**
- **CV = Charging Voltage**

Is the measured charging voltage within the standard voltage?

YES – Faulty battery

NO – GO TO STEP 5.

5. ALTERNATOR CHARGING COIL INSPECTION

Check the alternator charging coil (page 21-7).

Is the alternator charging coil resistance within (0.1 – 1.0 Ω) (20°C)?

YES – Faulty charging coil

NO – GO TO STEP 6.

6. REGULATOR/RECTIFIER SYSTEM INSPECTION

Check the voltage and resistance at the regulator/rectifier 3P (Black) connector (page 21-7).

Are the measurements correct?

YES – Faulty regulator/rectifier

NO –
- Open circuit in related wire
- Loose or poor contacts of related terminal
- Shorted wire harness

SYSTEM LOCATION

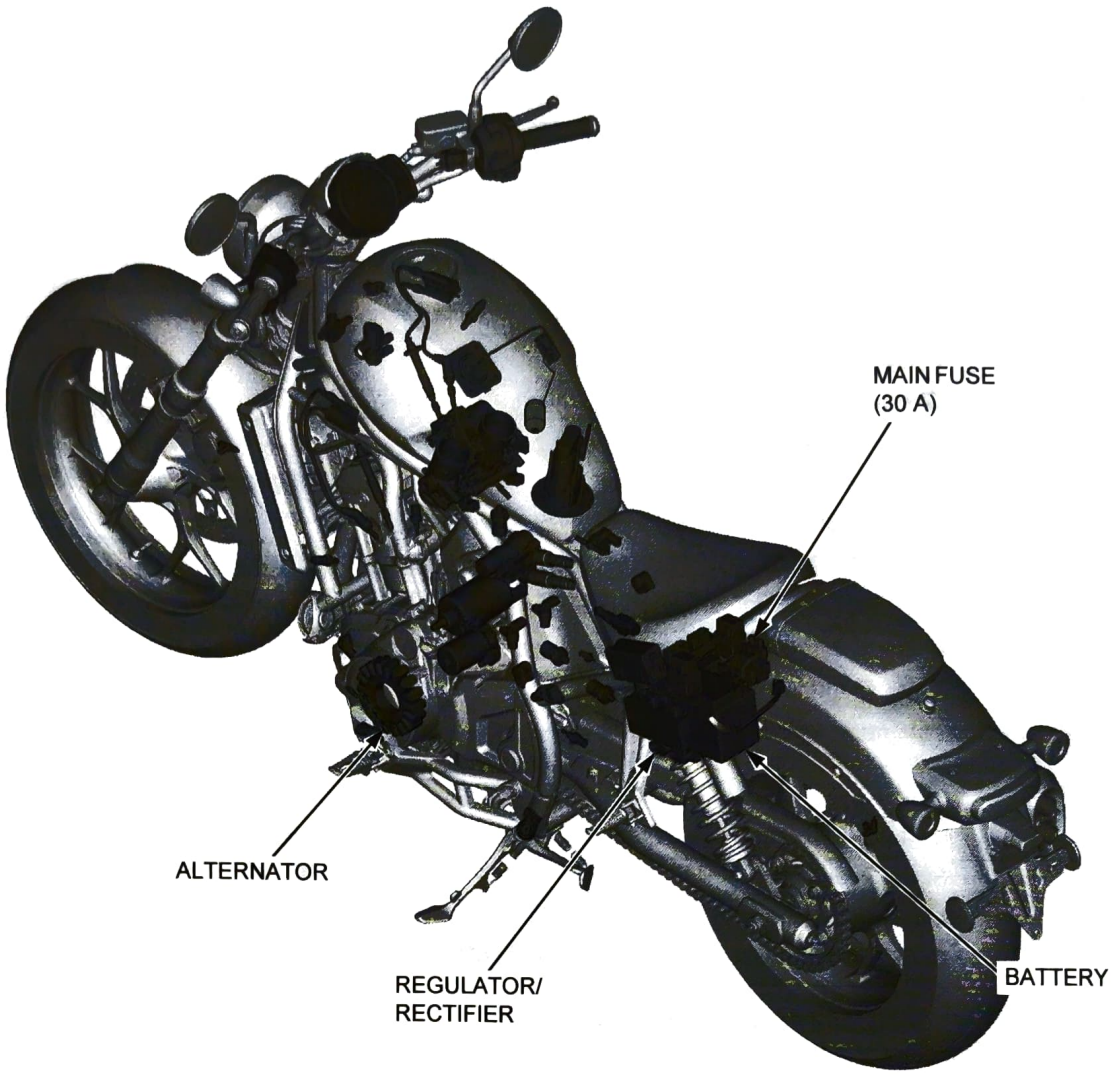

SYSTEM DIAGRAM

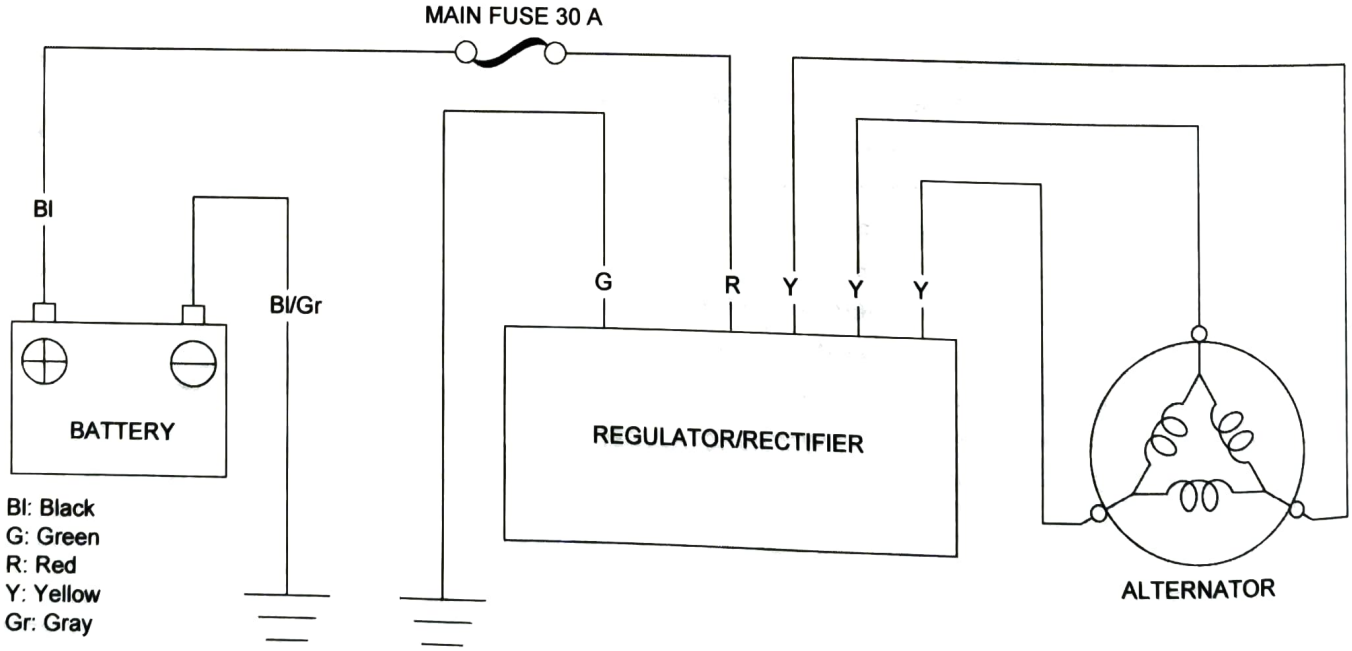

BATTERY

REMOVAL/INSTALLATION

Remove the battery case (page 2-12).

Turn the ignition switch OFF.

Disconnect the following by removing terminal bolt:

- negative (–) cable [1] by removing terminal bolt
- positive (+) cable [2] by removing terminal bolt

Temporarily tighten the terminal bolt.

Remove the battery [3].

Install the battery in the reverse order of removal.

Connect the positive (+) cable first and then the negative (-) cable.

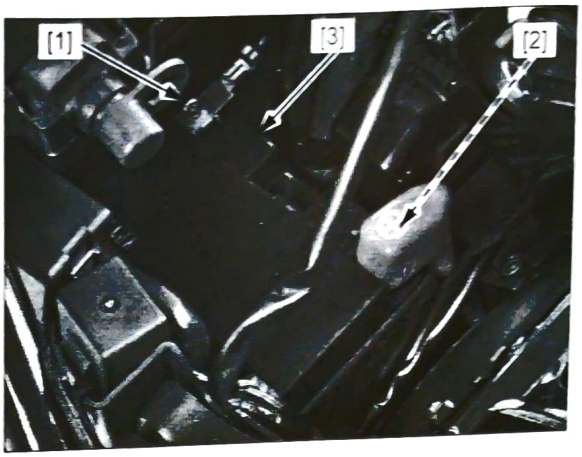

VOLTAGE INSPECTION

Measure the battery voltage using a commercially available digital multimeter.

VOLTAGE (20°C/68°F):
Fully charged: 12.8 V
Needs charging: Below 12.3 V

If the battery voltage is below 12.3 V, charge the battery.



BATTERY TESTING

Refer to the instructions that are appropriate to the battery testing equipment available to you.

TOOL:
Motorcycle battery analyzer MDX604P (U.S.A. only)

BATTERY CHARGING (U.S.A. only)

Remove the battery (page 21-5).

Refer to the instructions that are appropriate to the battery charging equipment available to you.

TOOL:
Optimate PRO-4 Battery Charger TMNTS53 (U.S.A. only)

CHARGING SYSTEM INSPECTION

CURRENT LEAKAGE INSPECTION

Remove the main seat (page 2-4).

With the ignition switch turned OFF, disconnect the negative (–) cable [1].
Connect the ammeter (+) probe to the wire harness negative (–) cable and ammeter (–) probe to the battery negative (–) terminal [2].
With the ignition switch turned OFF, check for current leakage.

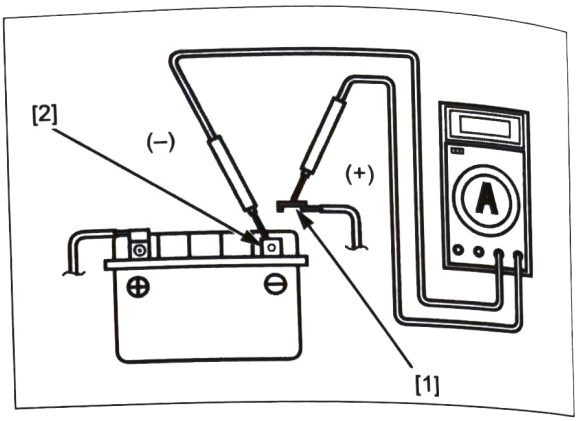

NOTE:

- When measuring current using a tester, set it to a high range, and then bring the range down to an appropriate level. Current flow higher than the range selected may blow the fuse in the tester.
- While measuring current, do not turn the ignition switch ON and engine stop switch to ○. A sudden surge of current may blow the fuse in the tester.

SPECIFIED CURRENT LEAKAGE: 0.2 mA max.

If current leakage exceeds the specified value, a shorted circuit is likely.
Locate the short by disconnecting connections one by one and measuring the current.

CHARGING VOLTAGE INSPECTION

Remove the main seat (page 2-4).

Be sure the battery is in good condition before performing this test.

Warm up the engine to normal operating temperature.
Connect the multimeter between the battery positive (+) terminal and negative (–) terminal.

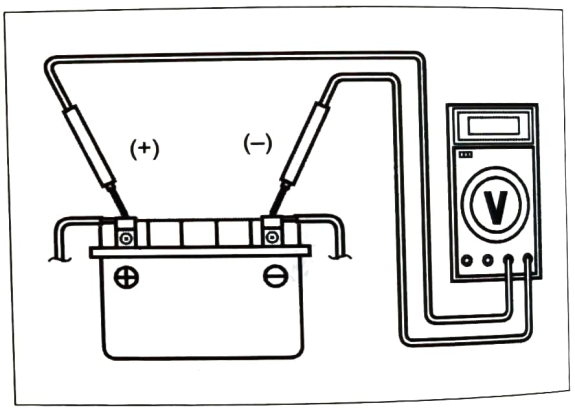

NOTE:

- To prevent a short, make absolutely certain which one is the positive (+) and negative (–) terminal or cable.
- Do not disconnect the battery or any cable in the charging system without first turning the ignition switch OFF. Failure to follow this precaution can damage the tester or electrical components.

With the headlight high beam, measure the voltage on the multimeter when the engine runs at 5,000 rpm.

STANDARD:
Measured BV < Measured CV < 15.5 V

- **BV = Battery Voltage**
- **CV = Charging Voltage**

ALTERNATOR CHARGING COIL

INSPECTION

It is not necessary to remove the stator coil to perform this test.

Disconnect the alternator 3P (Gray) connector [1].

Measure the resistance between the Yellow wire terminals of the alternator side connector.

STANDARD: 0.1 – 1.0 Ω (20°C/68°F)

Check for continuity between each wire terminal of the alternator/stator side connector and ground.
There should be no continuity.

Replace the alternator stator if the resistance is out of specification, or if any wire has continuity to ground.

For stator replacement (page 6-7).

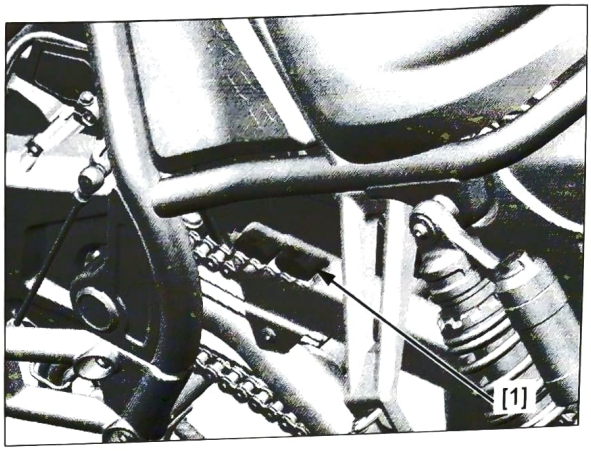

REGULATOR/RECTIFIER

SYSTEM INSPECTION

It is not necessary to remove the stator coil to perform this test.

Disconnect the alternator 3P (Gray) connector [1] and regulator/rectifier 3P (Black) connector [2].

If the charging voltage reading (page 21-6) is out of the specification, check the following at the wire harness side connector:

Item	Terminal	Specification
Battery charging line	Red (+) and ground (–)	Battery voltage should register
Charging coil line	Yellow and Yellow	0.1 – 1.0 Ω at (20°C/68°F)
Ground line	Green and ground	Continuity should exist

If all components of the charging system are normal and there are no loose connections at the regulator/rectifier connector, replace the regulator/rectifier unit.

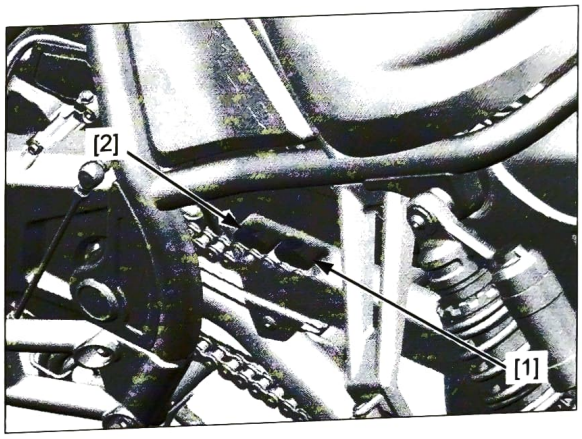

REMOVAL/INSTALLATION

Remove the battery case (page 2-12).

Disconnect the alternator 3P (Gray) connector [1] and regulator/rectifier 3P (Black) connector [2].

Remove the two bolts [3] and regulator/rectifier [4].

Install the regulator/rectifier in the reverse order of removal.

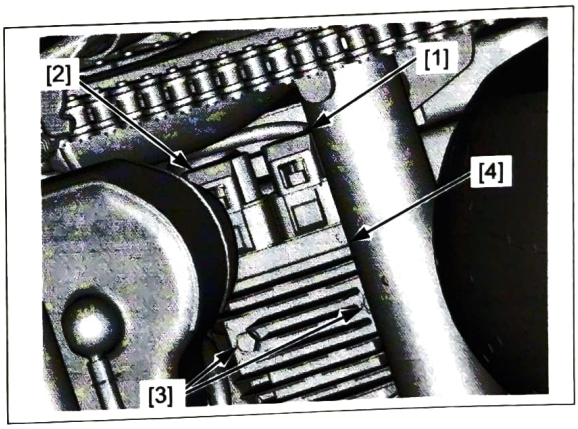

MEMO

22. LIGHTS/METERS/SWITCHES

SERVICE INFORMATION 22-2

SYSTEM LOCATION 22-3

HEADLIGHT 22-4

TURN SIGNAL LIGHT 22-5

BRAKE/TAIL LIGHT 22-7

LICENSE LIGHT 22-8

COMBINATION METER 22-8

COMBINATION METER/VS SENSOR 22-13

HIGH COOLANT TEMPERATURE INDICATOR/ECT SENSOR 22-13

ENGINE OIL PRESSURE INDICATOR/ EOP SWITCH (MT type) 22-14

OPEN AIR TEMPERATURE SENSOR 22-15

FUEL GAUGE/FUEL LEVEL SENSOR 22-16

IGNITION SWITCH 22-18

LEFT HANDLEBAR SWITCH 22-19

RIGHT HANDLEBAR SWITCH 22-20

BRAKE LIGHT SWITCH 22-22

CLUTCH SWITCH (MT type) 22-23

PARKING BRAKE SWITCH (DCT type) 22-23

NEUTRAL SWITCH (MT type) 22-24

SIDESTAND SWITCH 22-24

HORN 22-25

TURN SIGNAL/HAZARD RELAY 22-26

FAN RELAY 22-28

HIGH BEAM RELAY 22-29

USB CHARGER UNIT 22-31

SERVICE INFORMATION

GENERAL

NOTICE

- *Check the battery condition before performing any inspection that requires proper battery voltage.*
- *Use an electric heating element to heat the water/coolant mixture for the ECT sensor inspection. Keep flammable materials away from the electric heating element. Wear protective clothing, insulated gloves and eye protection.*
- *A continuity test can be made with the switches installed on the motorcycle.*
- *The following color codes are used throughout this section.*

Bu = Blue	G = Green	Lb = Light Blue	O = Orange	R = Red	Y = Yellow
Bl = Black	Gr = Gray	Lg = Light Green	P = Pink	W = White	

TOOLS

Test probe, 2 pack 07ZAJ-RDJA110 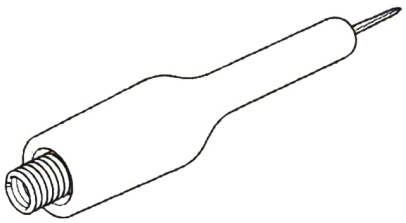	IgnitionMate peak voltage tester MTP07-0286 (U.S.A. only) 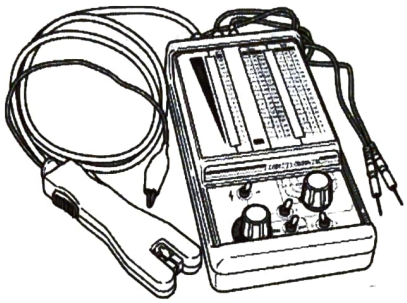	Peak voltage adaptor 07HGJ-0020100 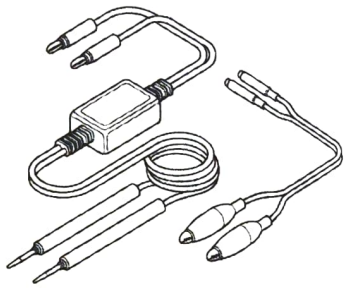 (not available in U.S.A.) with commercially available digital multimeter (impedance 10 MΩ/DCV minimum)

SYSTEM LOCATION

MT type shown:

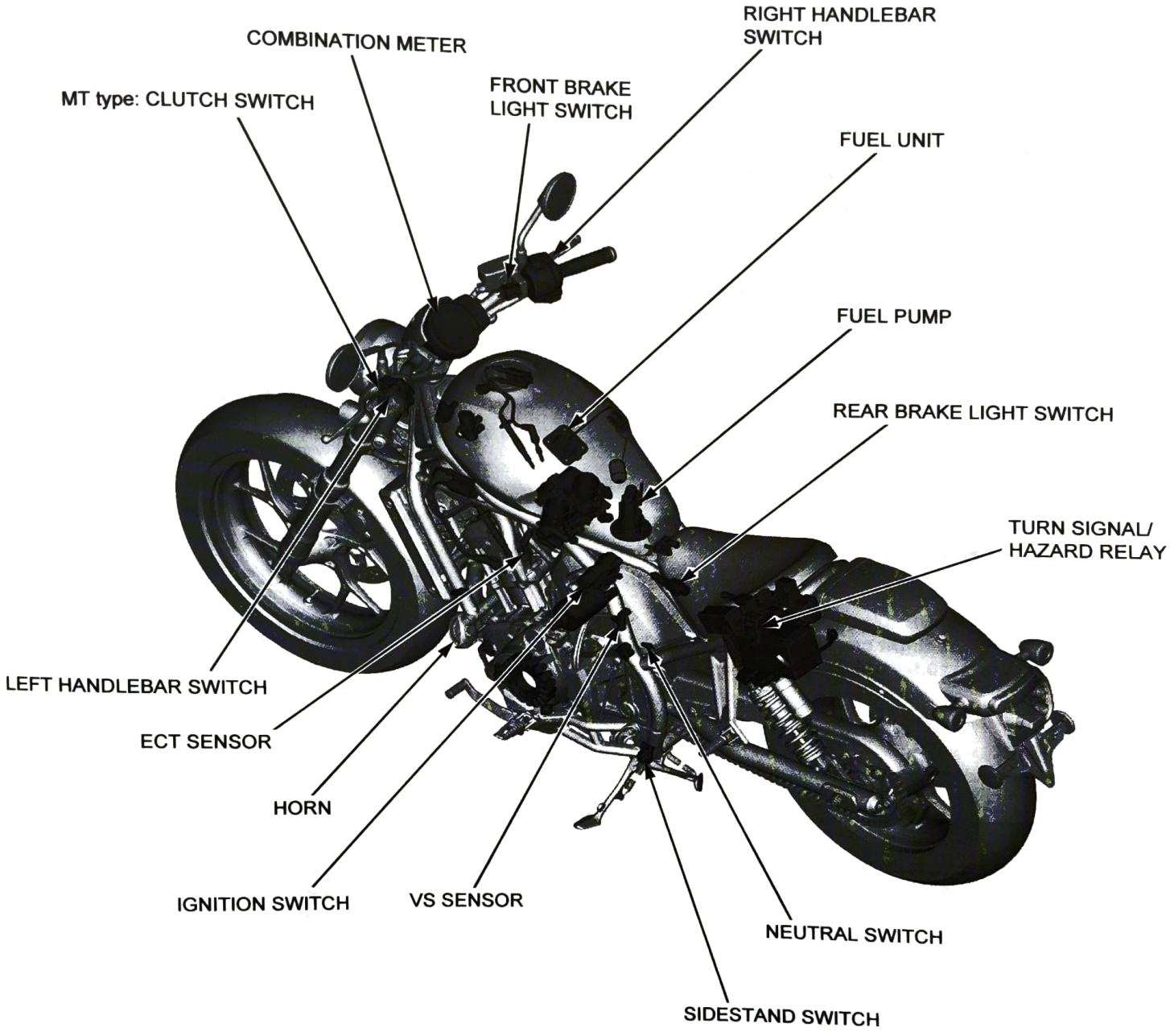

HEADLIGHT

HEADLIGHT REMOVAL/INSTALLATION

Remove the four socket bolts [1] and headlight assembly [2].
Release the turn signal 2P connector (left; Orange [3]/ right; Light blue [4]) and two position light 2P connectors [5] from the headlight guide.
Disconnect the headlight 6P (Black) connector [6].
Remove the headlight assembly.

Remove the following:

- Two socket bolts [7]
- Headlight stay [8]

Release the clip [9] from the headlight cover [10].

Remove the following:

- Two special bolts [11]
- Two mount rubbers [12]
- Cotter pin [13]
- Adjust screw [14]/washer [15]
- Spring [16]
- Adjust nut [17]
- Headlight cover

Installation is in the reverse order of removal.

NOTE:

- Replace the cotter pin and seals with new ones.

TORQUE:

Headlight case mounting socket bolt:
10 N·m (1.0 kgf·m, 7 lbf·ft)

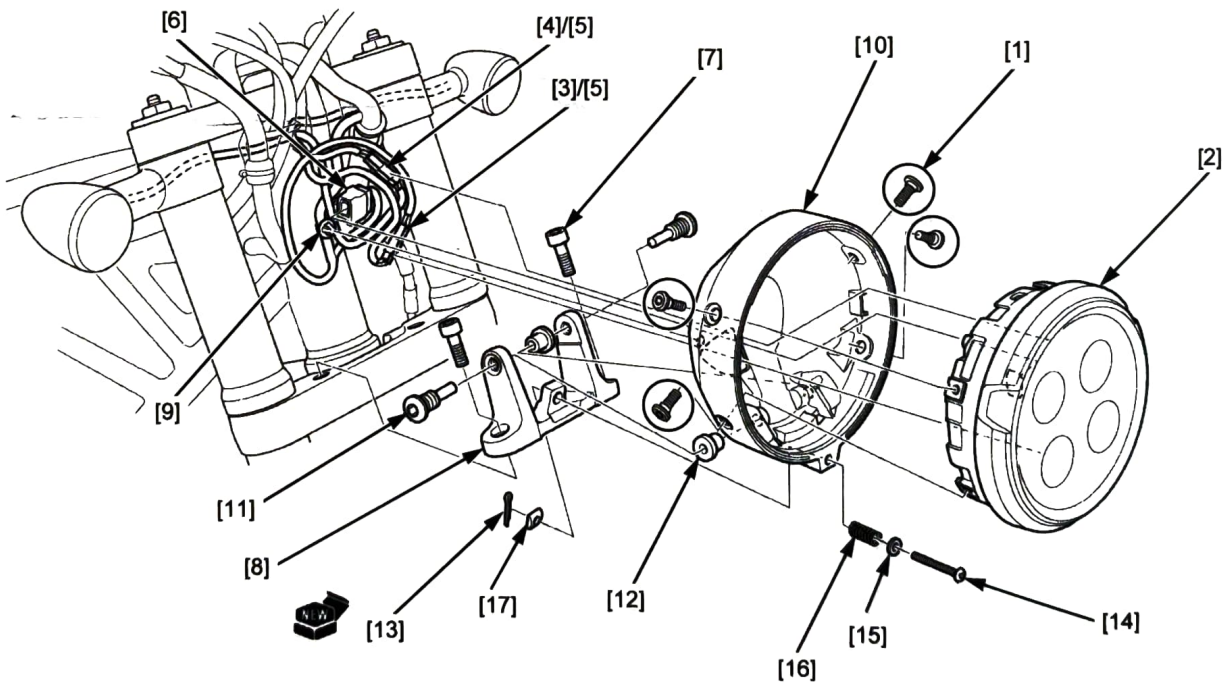

TURN SIGNAL LIGHT

FRONT TURN SIGNAL LIGHT

REMOVAL/INSTALLATION

Remove the headlight (page 22-4).

Disconnect the turn signal 2P connector (left; Orange/right; Light blue) [1] and position light 2P connector [2].

Remove the following:

- Socket bolt [3]
- Turn signal light [4] from the front fork

Installation is in the reverse order of removal.

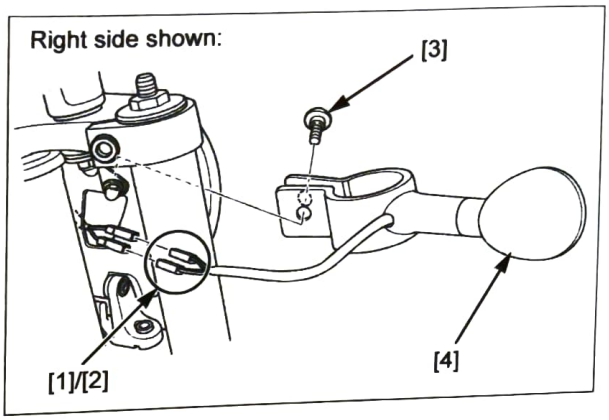

DISASSEMBLY

Remove the following:

- Turn signal light assembly (page 22-5)
- Tapping screw [1]

Turn the turn signal light [2] counterclockwise and slightly pull it.

Pull out the following:

- Turn signal light harness from guide [3]
- Turn signal light from the cover [4]

Remove the clip [5] and cover from the stay [6].

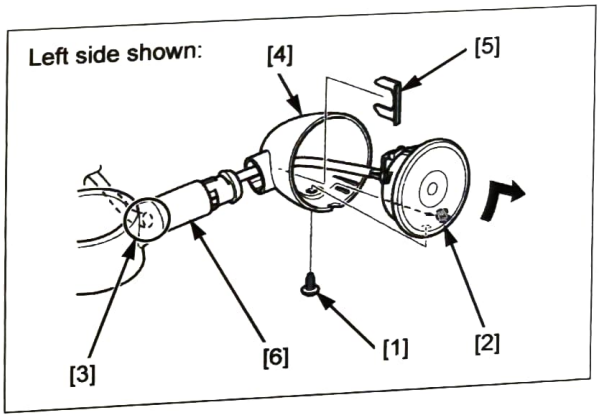

ASSEMBLY

Assembly is in the reverse order of disassembly.

- Install the turn signal light [1] by aligning the tab [2] with the groove [3] and turn it clockwise.

TORQUE:
Turn signal light tapping screw:
0.9 N·m (0.1 kgf·m, 0.7 lbf·ft)

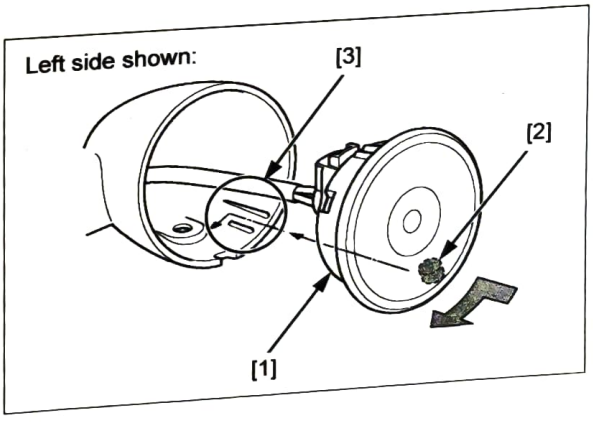

REAR TURN SIGNAL LIGHT

REMOVAL/INSTALLATION

Remove the following:

- Rear fender A (page 22-7)
- Socket bolt [1]
- Holder [2]
- Rear turn signal light assembly [3]

Installation is in the reverse order of removal.

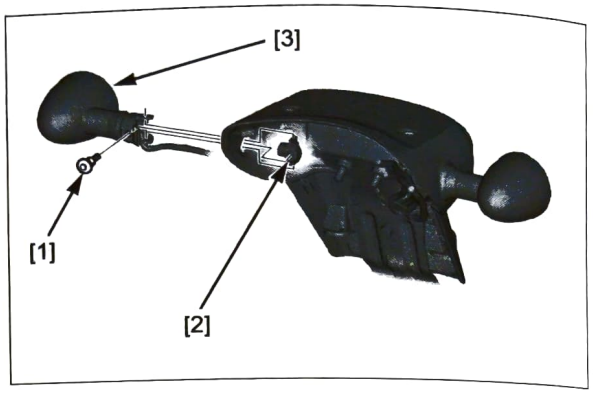

DISASSEMBLY

Remove the following:

- Turn signal light (page 22-6)
- Tapping screw [1]

Turn the turn signal light [2] counterclockwise and pull it out from the cover [3].

Remove the clip [4] and cover from the stay [5].

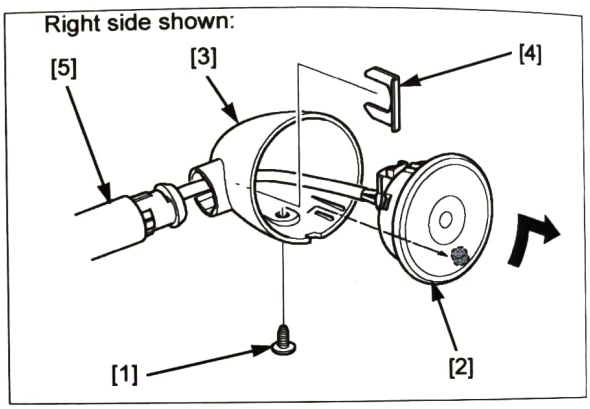

ASSEMBLY

Assembly is in the reverse order of disassembly.

- Install the turn signal light [1] by aligning the tab [2] with the groove [3] and turn it clockwise.

TORQUE:
Turn signal light tapping screw:
0.9 N·m (0.1 kgf·m, 0.7 lbf·ft)

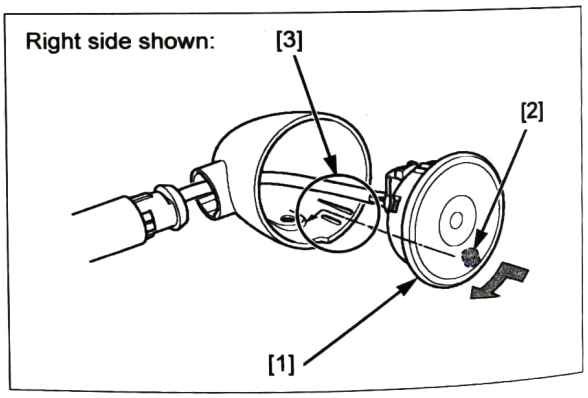

BRAKE/TAIL LIGHT

REMOVAL/INSTALLATION

Remove the following:

- Main seat (page 2-4)
- Passenger seat (CM model) (page 2-4)
- Rear fender (page 2-8)

Remove the following:

- CM model:
  - Socket bolts [1]
  - Collars [2]
- Rear fender cover [3]
- Two rear fender stay mounting socket bolts A [4]
- Rear fender stay mounting socket bolts B [5]
- Two rear fender stay mounting socket bolts C [6]
- Two license light mounting nuts [7]
- Two washers [8]
- Two brake/taillight mounting socket bolts [9]
- Brake/taillight [10] from rear fender stay [11]
- License light [12]

Installation is in the reverse order of removal.

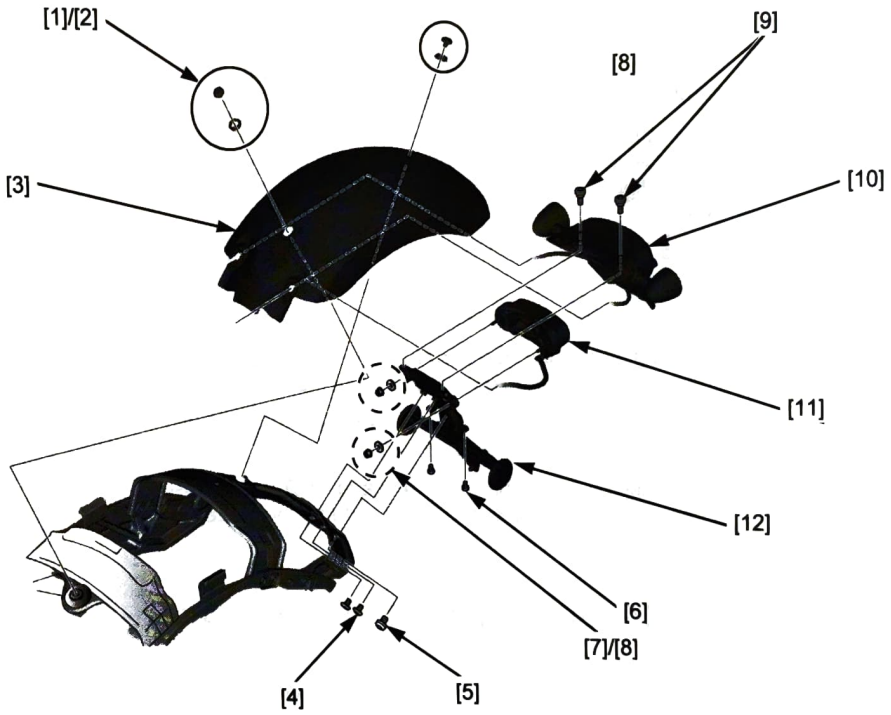

LICENSE LIGHT

REMOVAL/INSTALLATION

Remove the following:

- Rear fender A (page 22-7)
- Holder [1]
- License light [2]

Installation is in the reverse order of removal.

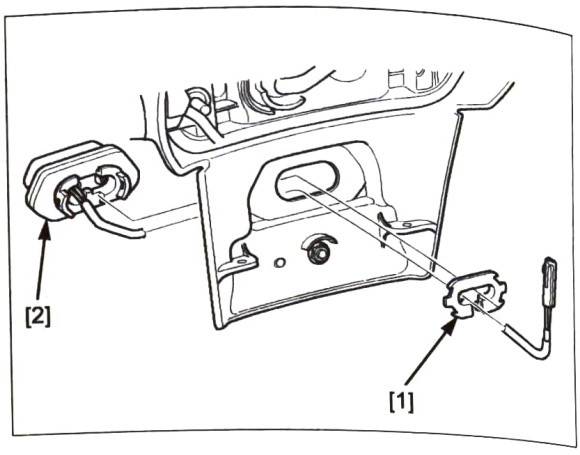

COMBINATION METER

SYSTEM INSPECTION

NOTE:

Check for loose or poor contact terminals at the combination meter 24P (Gray) connector.

When the ignition switch is turned ON with the engine stop switch "○", the combination meter will show the entire digital display [1] will reduce from full scale to zero.



NOTE:

- If the MIL [2] stays on and it does not go off, refer to MIL circuit troubleshooting (page 4-54).

If the digital display does not function at all, inspect the combination meter power/ground line (page 22-8).

If the power and ground lines are OK, replace the combination meter (page 22-10).

If the display of Current fuel mileage or Average fuel mileage (AVG) or Reserve fuel consumption (RES) is abnormal, inspect the fuel signal line (page 22-16).

POWER/GROUND LINES INSPECTION

NOTE:

- Check the following at the wire harness side connector of the combination meter.
- After inspection, reposition the dust cover securely.

Disconnect the combination meter 24P (Gray) connector (page 22-8).

POWER INPUT LINE

Measure the voltage between the combination meter 24P (Gray) connector and ground.

CONNECTION: Black/red (+) – Ground (–)

There should be battery voltage with the ignition switch turned ON.

If there is no battery voltage, check the following:

- Open circuit in the Black/red wire
- Open circuit in Red/black wire between the power box and ignition switch
- Blown sub fuse 10 A (METER)

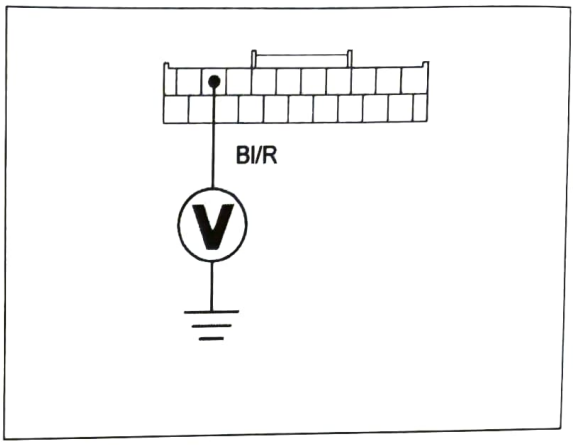

GROUND LINE

Check for continuity between the combination meter 24P (Gray) connector and ground.

There should be continuity at all times.

If there is no continuity, check for an open circuit in the wire.

CONNECTION: Green – Ground

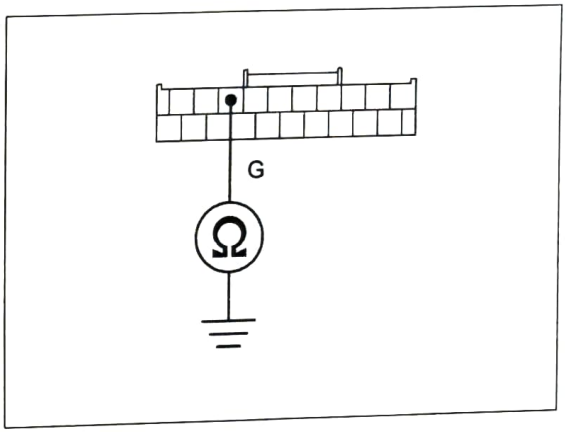

BACK-UP VOLTAGE LINE

Measure the voltage between the combination meter 24P (Gray) connector and ground.

CONNECTION: Red/white (+) – Ground (–)

There should be battery voltage at all times.

If there is no battery voltage, check the following:

- Open circuit in the Red/white wire
- Blown sub fuse 10 A (SUB VB)
- Blown fuse 30 A (MAIN2)
- Open circuit in White wire between the power box and starter relay switch

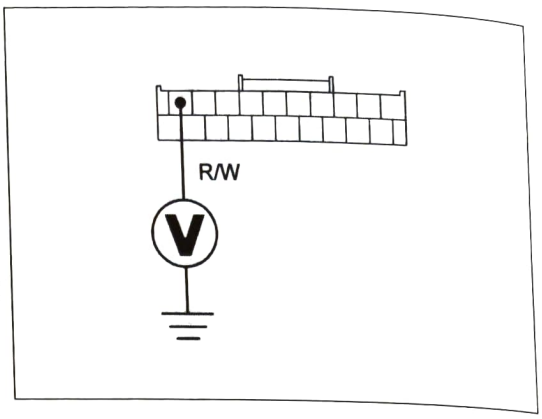

REMOVAL/INSTALLATION

Remove the following:

- Two socket bolts [1]
- Meter visor [2]
- Two well nuts [3]

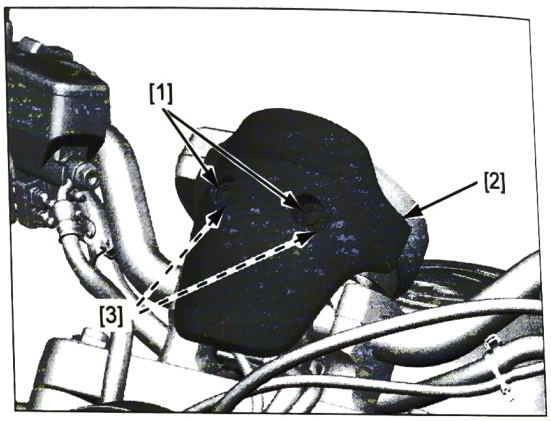

Remove the following:

- Left handlebar switch 8P (Black) connector [1]
- Right handlebar switch 12P (Black) connector [2]
- Right handlebar switch 8P (Black) connector [3]
- Two socket bolts [4]
- Rubber cap [5]

Disconnect the combination meter 24P (Gray) connector [6].

Remove the following:

- Screw [7]
- Open air temperature sensor [8]
- Combination meter assembly [9]

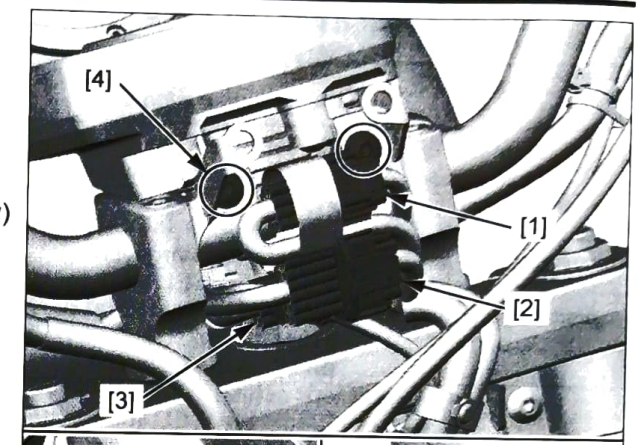

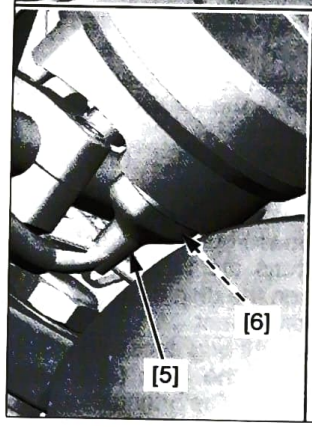

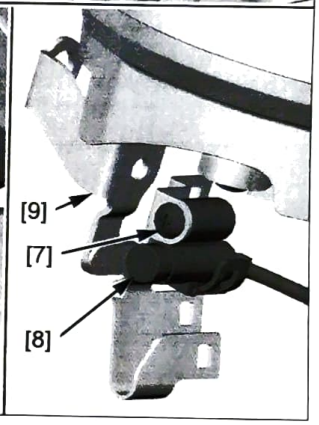

Remove the following from combination meter [1]:

- Three screws [2]
- Right meter stay [3]
- Left meter stay [4]
- Grommets [5]

Installation is in the reverse order of removal.

TORQUE:

Meter assembly screw:
1 N·m (0.1 kgf·m, 0.7 lbf·ft)

Open air temperature sensor screw:
1 N·m (0.1 kgf·m, 0.7 lbf·ft)

NOTE:

- Always replace the combination meter mounting bolt with a new one.
- Reposition the dust cover properly.

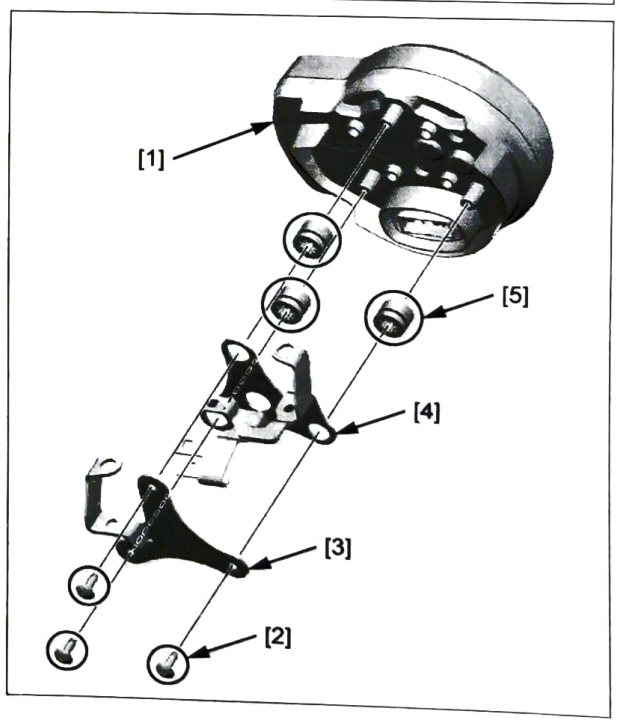

DIGITAL CLOCK SETTING PROCEDURE

Turn the ignition switch ON.

The control is automatically switched from the setting mode to the default display if the button is not pressed for about 30 seconds.

1. Time format setting:
   - Turn the ignition switch to the ON position.
   - Press and hold the MODE button and the SEL (up) button or the SEL (down) button, the current time format start flashing.
   - Press the SEL (up) button or the SEL (down) button to select "12 hr" or "24 hr"
   - Press the MODE button. The time format is set, and then the display moves to the clock setting.
2. Clock setting:
   - Press the SEL (up) button or the SEL (down) button until the desired hour is displayed. Press and hold the SEL (up) button or the SEL (down) button to advance the hour fast.
   - Press the MODE button. The minute digits start flashing.
   - Press the SEL (up) button or the SEL (down) button until the desired minute is displayed. Press and hold the SEL (up) button or the SEL (down) button to advance the minute fast.
   - Press the MODE button. The clock is set, and then the display moves to the backlight brightness adjustment.
3. Backlight brightness adjustment:
   - Press the SEL (up) button or the SEL (down) button. The brightness is switched.
   - Press the MODE button. The backlight is set, and then the display moves to the activating/ deactivating of tripmeter A, average fuel mileage A, and average speed A automatic reset mode.
4. Activating/deactivating of tripmeter A, average fuel mileage A and average speed A automatic reset mode:
   - Press the SEL (up) button or the SEL (down) button to select "ON"(activate) or "OFF" (deactivate) in the automatic reset mode.
   - Press the MODE button. The activation/ deactivation of automatic reset mode is set, and then the display moves to the changing of the speed and mileage unit.
5. Changing the speed and mileage unit:
   - Press the SEL (up) button or the SEL (down) button to select either "km/h" and "km" or "mph" and "mile".
   - Press the MODE button. The speed and mileage unit is set, and then the display moves to the changing of the temperature gauge unit.
6. Changing the temperature gauge unit:
   - Press the SEL (up) button or the SEL (down) button to select "°C" or "°F".
   - When the "km/h" for speed and "km" for mileage are selected, press the MODE button. The temperature gauge unit is set, and then the display moves to the changing of the fuel mileage meter unit.
   - When the "mph" for speed and "mile" for mileage are selected, press the MODE button. The temperature gauge unit is set, and then the display will return to the ordinary display.
7. Changing the fuel mileage meter unit:
   - Press the SEL (up) button or the SEL (down) button to select "L/100km" or "km/L".
   - Press the MODE button. The fuel mileage meter unit is set, and then the display will return to the ordinary display.

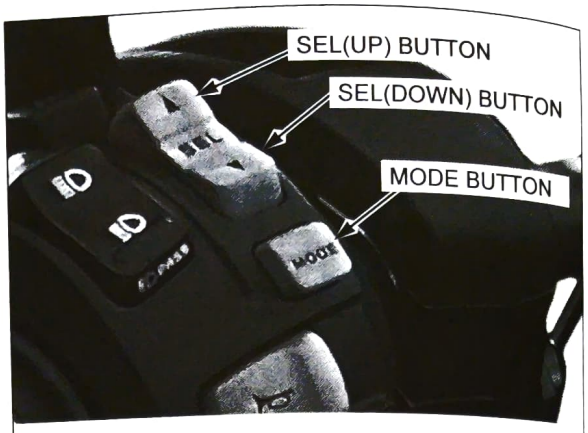

Clock setting display flow:

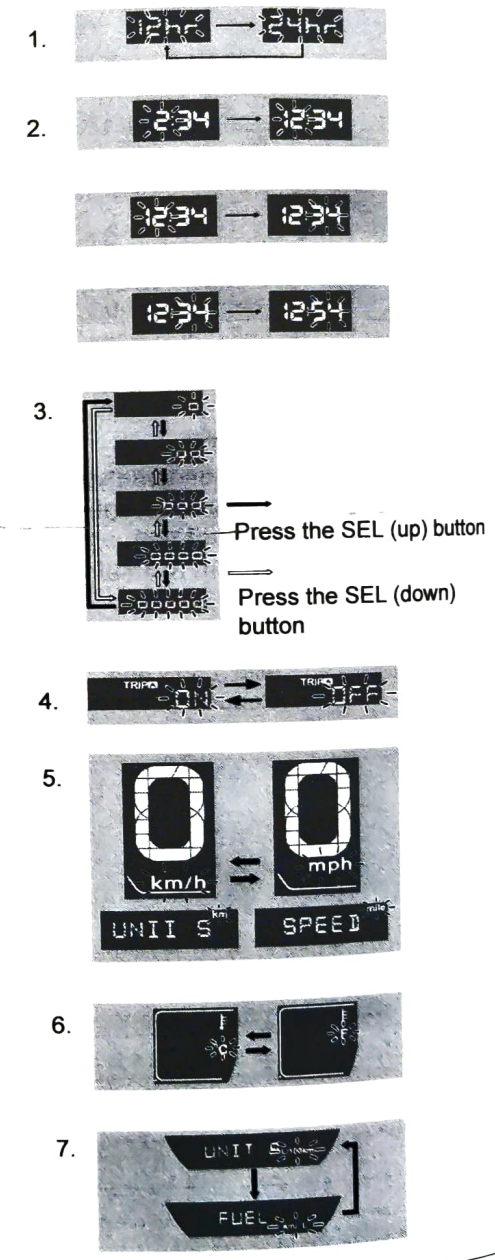

COMBINATION METER/VS SENSOR

SYSTEM INSPECTION

If the combination meter does not operate, check the following:

– Combination meter initial operation (page 22-8)
– MIL lighting: If the MIL blinks 11 (DTC 11-1), check the VS sensor system (page 4-60)

If the above items are OK, replace the combination meter (page 22-10).

HIGH COOLANT TEMPERATURE INDICATOR/ECT SENSOR

SYSTEM INSPECTION

NOTE:

- If the high coolant temperature indicator and digital display do not function at all, refer to combination meter initial operation check (page 22-8).

If the high coolant temperature indicator does not operate properly, check the following:

– MIL lighting: If the blinks 7 (DTC 7-1, 7-2), check the ECT sensor system (page 4-57)
– ECT sensor (page 22-13)

If the above items are OK, replace the combination meter (page 22-10).

ECT SENSOR INSPECTION

Remove the ECT sensor (page 4-57).

Suspend the ECT sensor [1] in a pan of coolant (Honda PRE-MIX COOLANT) on an electric heating element and measure the resistance between the sensor terminals as the coolant heats up.

- Soak the ECT sensor in coolant up to its threads with at least 40 mm (1.6 in) from the bottom of the pan to the bottom of the sensor.
- Keep the temperature constant for 3 minutes before testing. A sudden change of temperature will result in incorrect readings. Do not let the thermometer [2] or ECT sensor touch the pan.

TEMPERATURE	40°C (104°F)	100°C (212°F)
RESISTANCE	1.0 – 1.3 kΩ	0.14 – 0.18 kΩ

Replace the ECT sensor if it is out of specification by more than 10% at any temperature listed.

Install the ECT sensor (page 4-57).

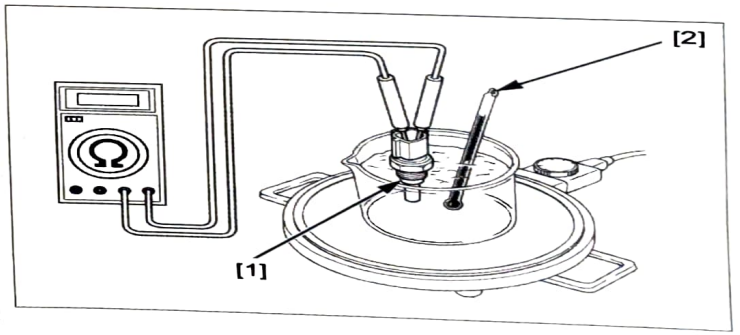

ENGINE OIL PRESSURE INDICATOR/ EOP SWITCH (MT type)

SYSTEM INSPECTION

When the system is normal, the engine oil pressure indicator [1] comes on when the ignition switch is turned ON with the engine stop switch "○", and then goes off when the engine is started.



NOTE:

- If the oil pressure indicator and digital display do not function at all, refer to combination meter initial operation check (page 22-8).

If the engine oil pressure indicator comes on for about 2 seconds and goes off when the ignition switch is turned ON, check the EOP switch line for open circuit (page 22-14).

If the engine oil pressure indicator stays on after the engine is started, stop the engine immediately and confirm the indication conditions:

- The engine oil pressure indicator stays on and the other indications function normally, check the following:
  - Engine oil level (page 3-12)
  - EOP switch line for short circuit (page 22-14)
  - Engine oil pressure (page 9-6)

If the above items are OK, replace the combination meter (page 22-10).

EOP SWITCH LINE INSPECTION

Turn the ignition switch OFF.

Disconnect the EOP switch wire (page 22-15).

Open Circuit Inspection

Check for continuity between the wire terminal [1] and ground.

There should be continuity.

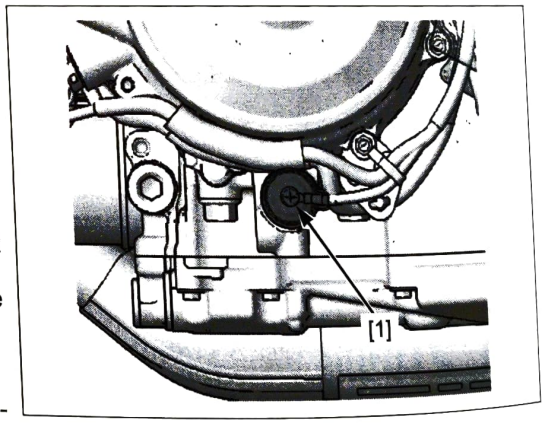

- If there is no continuity, the EOP switch wire (Black or Light green) has a open circuit.
- If there is continuity, replace the EOP switch (page 22-15).

Short Circuit Inspection

Disconnect the ECM 33P (Black) connector (page 4-58).

Check for continuity between the wire terminal and ground as same manner as above.

There should be no continuity.

- If there is continuity, the EOP switch wire (Black or Light green) has a short circuit.
- If there is no continuity, replace the EOP switch (page 22-15).

EOP SWITCH REMOVAL/INSTALLATION

Place the motorcycle on its sidestand on a level surface.

Release the rubber cap [1] from the EOP switch [2].

Remove the terminal screw [3] and disconnect the switch terminal [4].

Remove the EOP switch.

Installation is in the reverse order of removal.

NOTE:

- Before installing the EOP switch, clean the threads in the crankcase with a degreasing agent thoroughly.
- Apply sealant to the EOP switch threads. Do not apply to the sensor tip in the area as shown.

TORQUE:
EOP switch:
12 N·m (1.2 kgf·m, 9 lbf·ft)
EOP switch terminal screw:
2 N·m (0.2 kgf·m, 1.5 lbf·ft)

Check the engine oil level (page 3-12).

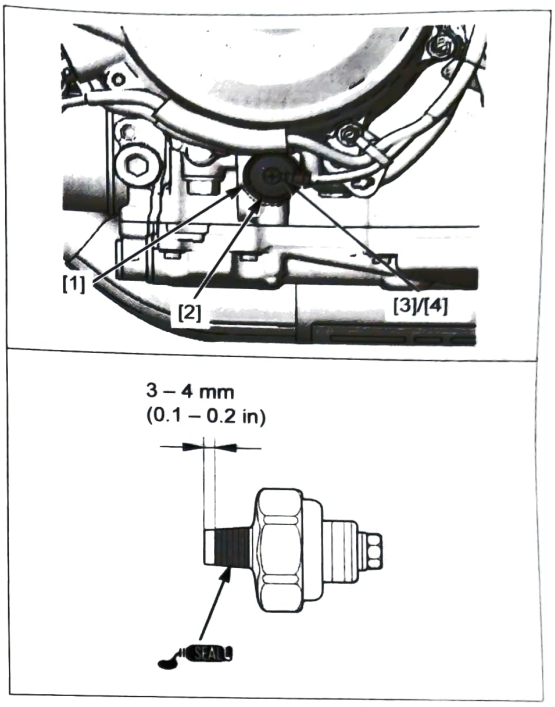

OPEN AIR TEMPERATURE SENSOR

REMOVAL/INSTALLATION

Remove the open air temperature sensor from combination meter assembly (page 22-8).

Disconnect the open air temperature sensor 2P (Black) connector [1].

Installation is in the reverse order of removal.

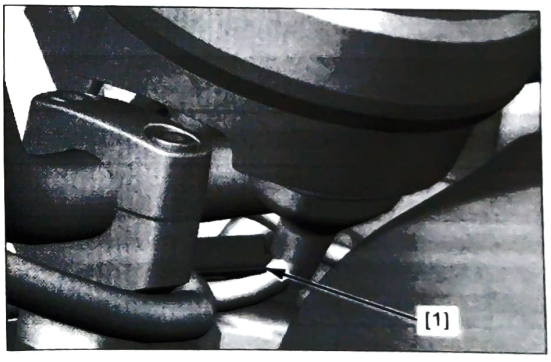

INSPECTION

Remove the open air temperature sensor 2P (Black) connector (page 22-15).

Measure the resistance at the 2P (Black) connector [1] of the sensor side.

STANDARD: 4.9 – 5.1 kΩ (25°C/77°F)

Replace the open air temperature sensor if measurement is out of specification.

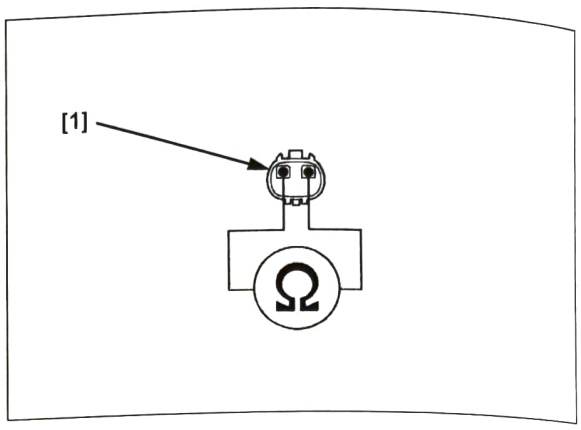

FUEL GAUGE/FUEL LEVEL SENSOR

FUEL GAUGE INSPECTION

When the circuit malfunction occurs, the combination meter displays the flow pattern in the fuel gauge. If it is indicated, check following wires for open or short circuit:

- Red/black wire between the combination meter and fuel pump unit.
- Black/green wire between the fuel pump unit and ground.

If the wires are OK, check the fuel level sensor (page 22-17).
If the fuel level sensor is OK, replace the combination meter (page 22-10).

Open circuit (flowing to outside):

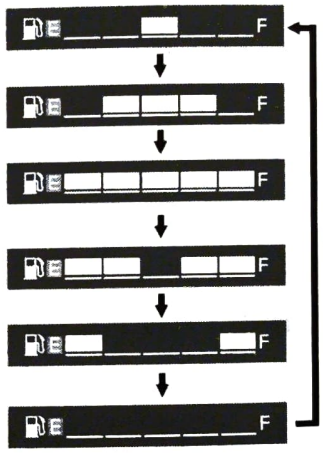

Short circuit (flowing to inside):

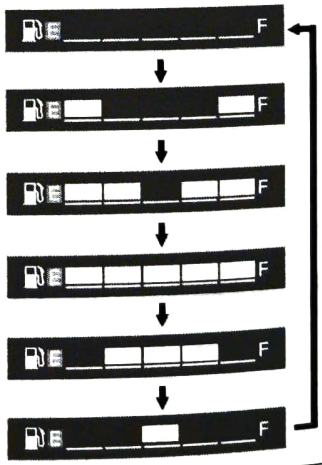

FUEL LEVEL SENSOR INSPECTION

Remove the fuel unit (page 7-8).

Measure the resistance between the fuel unit 2P (Black) connector [1] terminals.

CONNECTION: Red/blue – Green

FLOAT POSITION	Up (Full)	Down (Empty)
RESISTANCE	6 – 10 Ω	266 – 274 Ω

If the resistance is out of specification, replace the fuel pump unit as an assembly (page 7-8).

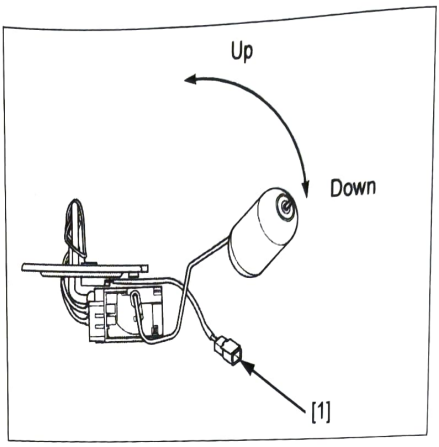

FUEL UNIT REMOVAL/INSTALLATION

Remove the fuel tank (page 7-6).

Remove the harness clip [1] and the four bolts [2].

Flip the fuel unit [3].

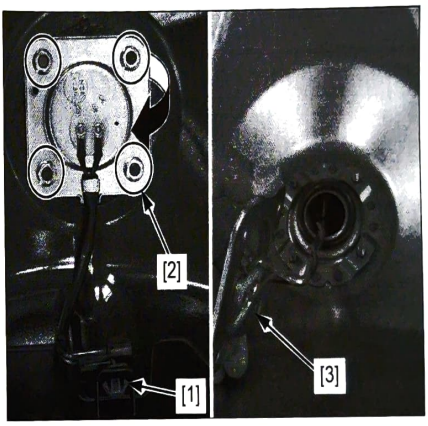

Pull out the sensor arm [1] toward left side.

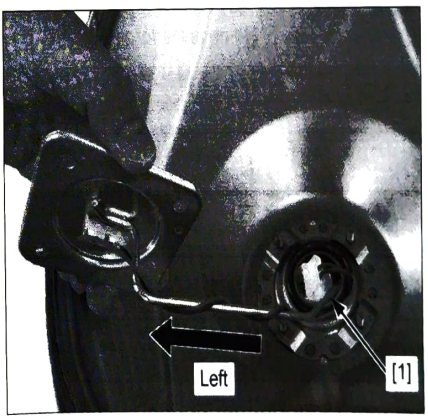

Twist forward and pull out the body [1].

Pull out the float arm [2] along the shape of the float arm and pull out the float [3].

Remove the O-ring [4].

Installation is in the reverse order of removal.

TORQUE:
Fuel unit nut: 12 N·m (1.2 kgf·m, 9 lbf·ft)

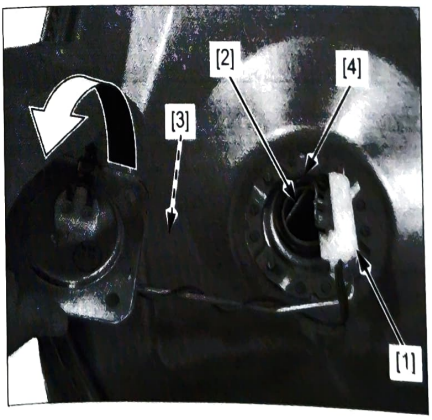

IGNITION SWITCH

REMOVAL/INSTALLATION

Remove the following:

- Left front side cover (page 2-5)
- EVAP canister (page 7-19)
- Seat catch hook (page 2-11)

Release the seat lock cable from two guides [1].

Release and disconnect the ignition switch 2P (Brown) connector [2].

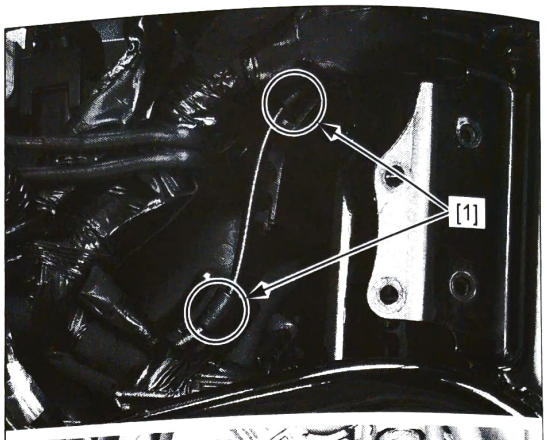

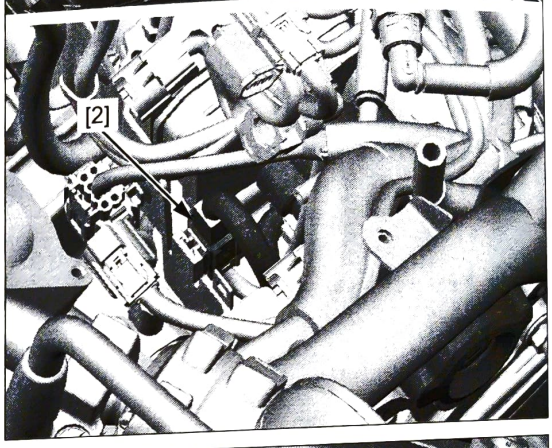

Remove the following:

- Two socket bolts [1]
- Two special bolts [2]
- Ignition switch assembly [3]

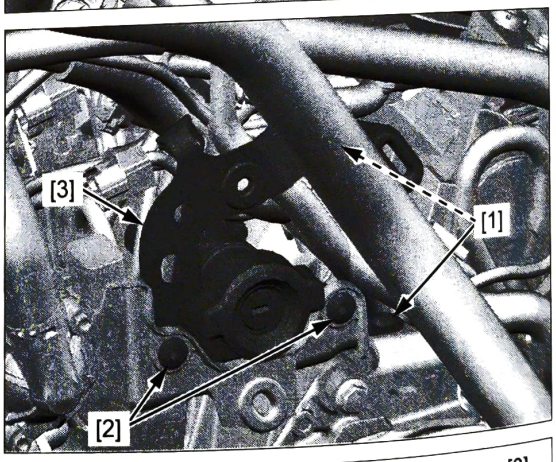

Remove the two screws [1] and the plate [2].

Release the seat lock cable [3] from the ignition switch [4].

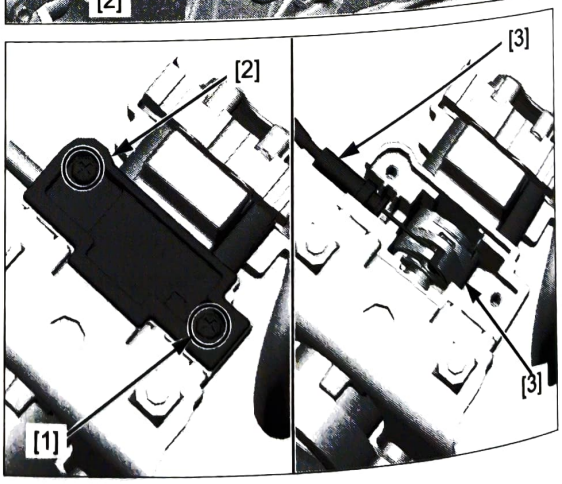

Remove the following from the ignition switch stay [1]:

- Two socket bolts [2]
- Ignition switch [3]

Installation is in the reverse order of removal.

TORQUE:
Ignition switch mounting socket bolt:
1.6 N·m (0.2 kgf·m, 1.2 lbf·ft)

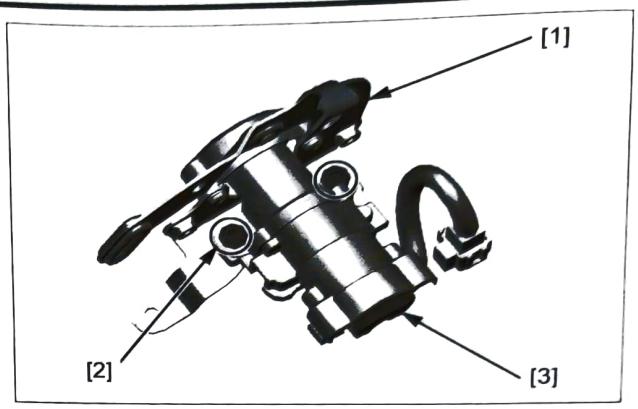

INSPECTION

Remove the following EVAP canister (page 7-19).

Release and disconnect the ignition switch 2P (Brown) connector [1].

Check for continuity between the switch side connector terminals in each switch position.

There should be continuity with the ignition switch turned ON, and no continuity with the ignition switch turned OFF.

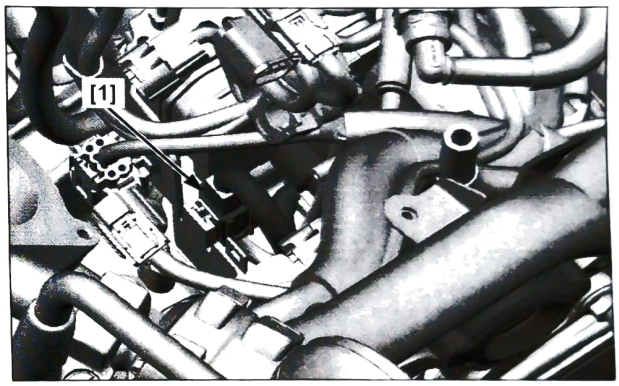

LEFT HANDLEBAR SWITCH

INSPECTION

Remove the following:

- Meter visor (page 22-8)
- Connector box (page 2-15)

Disconnect the following:

- Left handlebar switch 8P connector [1]
- Left handlebar switch 16P (Gray) connector [2]

Check for continuity between the wire terminals of the handlebar switch connector in each switch position.

Refer to the wiring diagram for the terminals and switch status.

- MT type (page 23-2)
- DCT type (page 23-5)

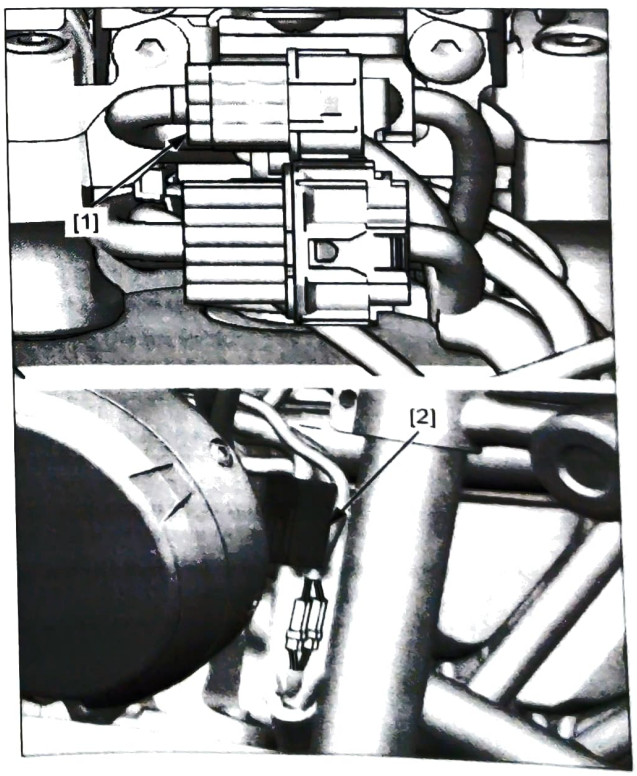

RIGHT HANDLEBAR SWITCH

INSPECTION

NOTE:

- Before inspection, check that there is no DTCs.

Remove the following:

- Meter visor (page 22-8)
- Connector box (page 2-15)

Disconnect the following:

- Grip APS 8P (Black) connector [1]
- Right handlebar switch 12P (Black) connector [2]
- Right handlebar switch 2P (Black) connector [3]
- Right handlebar switch 2P (Gray) connector [4]

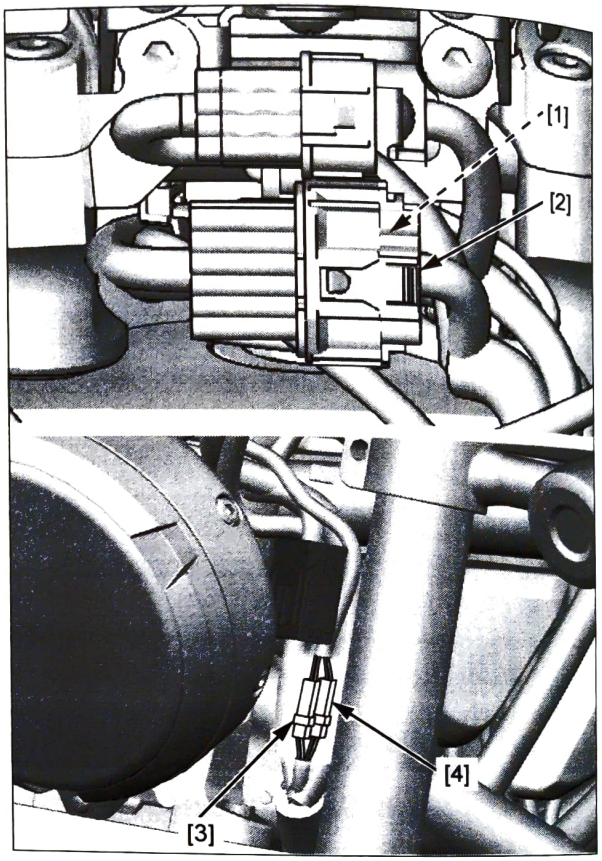

STARTER SWITCH INSPECTION

Disconnect the right handlebar switch 12P (Black) connector (page 22-20).

Check the continuity between the switch side 12P connector [1] terminals.

CONNECTION: Black – Green/black

There should be continuity only when the starter switch is pushed.

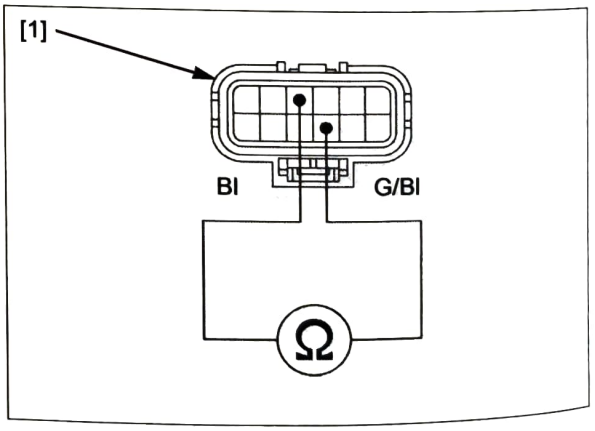

If the starter switch is OK, check the following:

- Open circuit in the Beige wire between the ECM 39P (Black) connector and right handlebar switch 12P (Black) connector
- Open circuit in the Gray wire between the right handlebar switch 12P and ECM 33P (Black) connectors
- Open circuit in the Gray wire between the ECM 33P (Gray) and right handlebar switch 12P connectors
- Engine stop switch function (page 22-20)

If the wires are OK, replace the ECM with a known good one and recheck.

ENGINE STOP SWITCH INSPECTION

Disconnect the right handlebar switch 12P (Black) connector (page 22-20).

Check the continuity between the switch side 12P (Black) connector [1] terminals.

CONNECTION: Green – White/blue

There should be no continuity only when the engine stop switch is OFF.

If the engine stop switch is OK, check the following:

- Open circuit in the Blue wire between the ECM 33P (Gray) and right handlebar switch 12P (Black) connectors
- Open circuit in the Black wire between the right handlebar switch 12P (Black) and power box
- Short circuit in the Blue wire between the ECM 33P (Gray) and right handlebar switch 12P connectors

If the wire is OK, replace the ECM with a known good one and recheck.

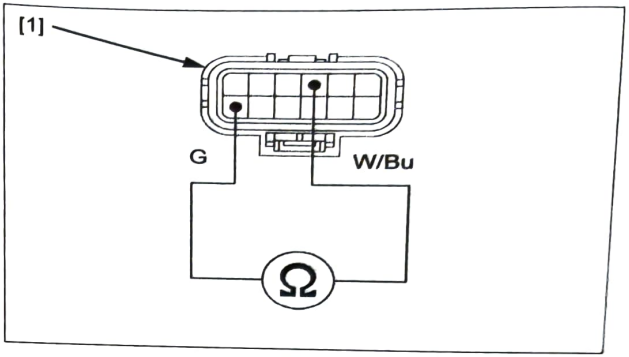

OTHER SWITCHES INSPECTION

Disconnect the right handlebar switch 12P connector (page 22-20).

Measure the resistance between the right handlebar switch side 12P connector [1] terminals when each switch is operated.

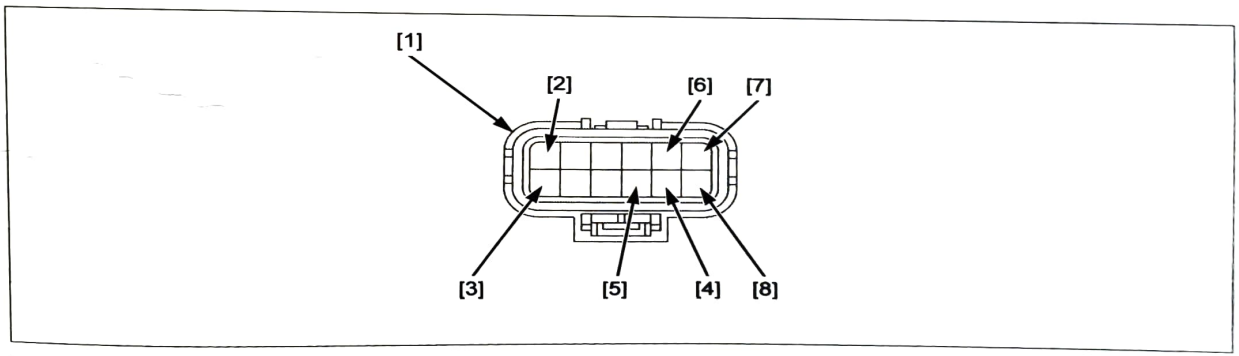

CONNECTION:	STANDARD (at 25°C/77°F):	
Green/blue [2] – Blue [3]	Function switch:	95.5 – 105.5 Ω
White/black [4] – Green/black [5]	Cruise control main switch:	85.2 – 94.1 Ω
	SET/– Cruise control lever:	187.2 – 207.0 Ω
White [6] – Green/black [5]	RES/+ Cruise control lever:	87.8 – 97.0 Ω

DCT type only:

CONNECTION:	STANDARD (at 25°C/77°F):	
Black/blue [7] – Green/white [8]	N switch:	85.2 – 94.1 Ω
	D–S switch:	187.2 – 207.0 Ω
	A/M switch:	372.4 – 411.7 Ω

Replace the right handlebar switch if any switch resistance are not standard value.

BRAKE LIGHT SWITCH

FRONT

Remove the following:

- Brake light switch connectors (upper side) [1]
- Cruise cancel switch connectors (lower side) [2]

Check for continuity between the front brake switch side terminals.

There should be continuity with the brake lever squeezed, and no continuity with the brake lever released.

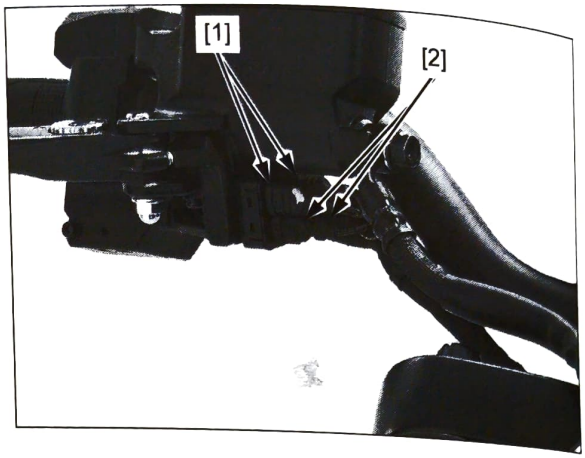

REAR

Remove the right main step bracket (page 19-13).

Disconnect the rear brake light switch 4P (Black) connector [1].

Check for continuity between the switch side connectors.

There should be continuity with the brake pedal depressed, and no continuity when the brake pedal released.

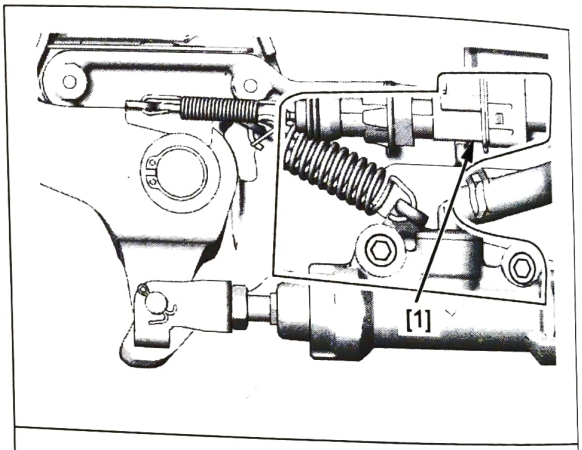

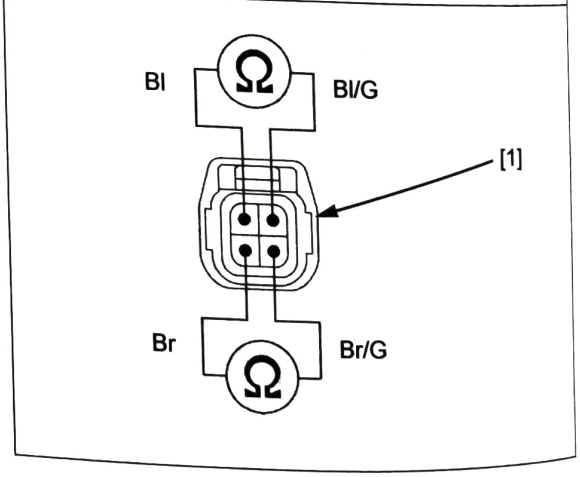

CLUTCH SWITCH (MT type)

Remove the following:

- Clutch switch connectors (upper side) [1]
- Cruise cancel switch connectors (lower side) [2]

Check for continuity between the switch terminals.

There should be continuity with the clutch lever squeezed, and no continuity when the clutch lever is released.

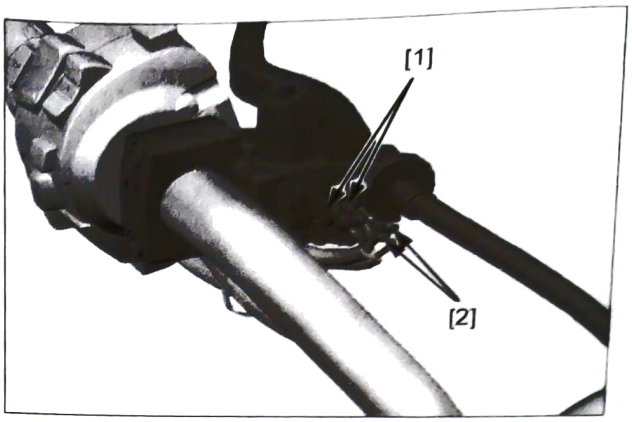

PARKING BRAKE SWITCH (DCT type)

REMOVAL/INSTALLATION

Remove the cover from parking break lever assembly (page 19-20).

Remove the screw [1] and parking break switch [2].

Installation is in the reverse order of removal.

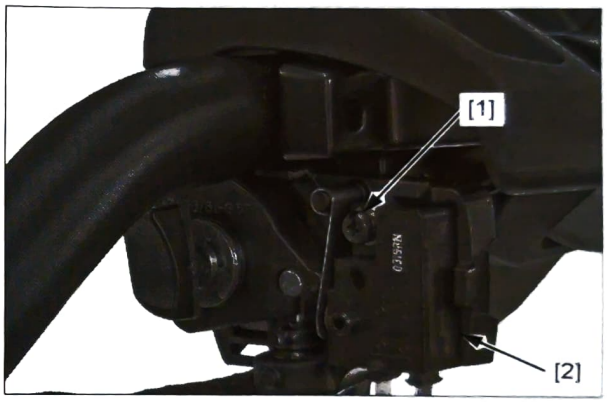

INSPECTION

Disconnect the parking brake switch connectors [1] and check for continuity between the terminals.

There should be continuity with the parking brake lever applied, and there should be no continuity with the parking brake lever released.

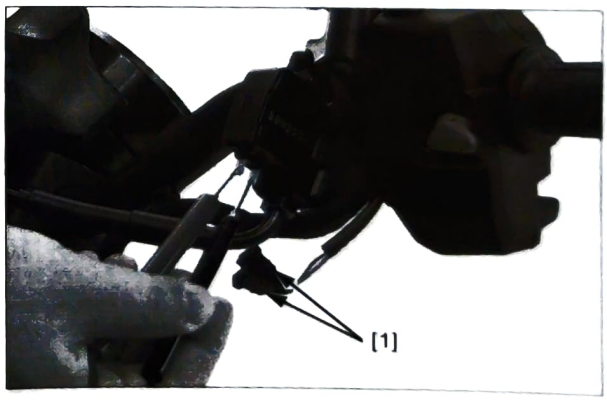

NEUTRAL SWITCH (MT type)

REMOVAL/INSTALLATION

Remove the following:

- Radiator reserve tank (page 8-10)
- Terminal cap [1]
- Terminal nut [2]
- Wire terminal [3]
- Neutral switch [4]
- Sealing washer [5]

Installation is in the reverse order of removal.

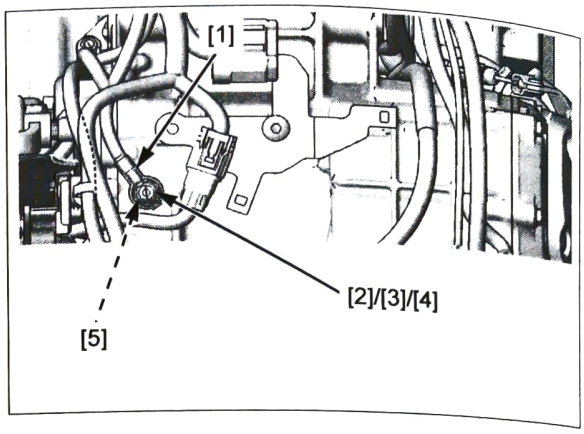

NOTE:

- Replace the sealing washer with a new one.
- When tightening the terminal nut, route the wires properly (page 1-27).

TORQUE:

Neutral switch: 12 N·m (1.2 kgf·m, 9 lbf·ft)
Terminal nut: 1.7 N·m (0.2 kgf·m, 1.3 lbf·ft)

SIDESTAND SWITCH

INSPECTION

Remove the left side cover (page 2-4).

Disconnect the sidestand switch 2P (Black) connector [1].

Check for continuity between the sidestand switch side connector terminals.

There should be continuity with the sidestand retracted, and, no continuity when the sidestand is lowered.



REMOVAL/INSTALLATION

Remove the following:

- Left side cover (page 2-4)
- Drive sprocket cover (page 2-9)
- DCT type: Shift control motor cover (page 13-52)

Disconnect the sidestand switch 2P (Black) connector [1].

Remove the bolt [2] and sidestand switch [3].

Installation is in the reverse order of removal.

TORQUE:

Sidestand switch mounting bolt:
10 N·m (1.0 kgf·m, 7 lbf·ft)

NOTE:

- Align the switch groove with the locating pin, and the switch pivot holder with the sidestand end properly.
- Replace the switch bolt with a new one.

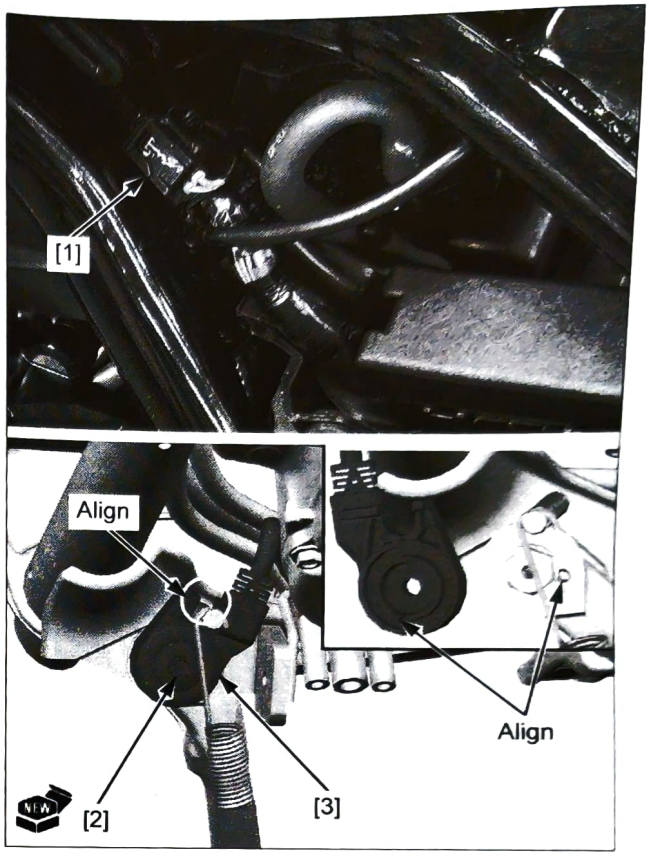

HORN

INSPECTION

Disconnect the horn connectors [1] from the horn.

Connect a 12 V battery to the horn terminals.

The horn is normal if it sounds when the 12 V battery is connected across the horn terminals.

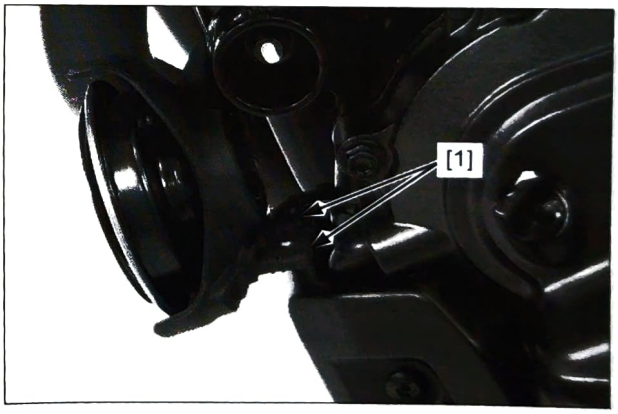

REMOVAL/INSTALLATION

Disconnect the horn connectors (page 22-25).

Remove the following:

- Mounting bolt [1]
- Collar [2]
- Two rubber mounts [3]
- Heat guard cover [4]
- Horn [5]

Installation in the reverse order of removal.

NOTE:

- When tightening the mounting bolt, align the stay end of the heat guard cover with the tab of the horn stay.

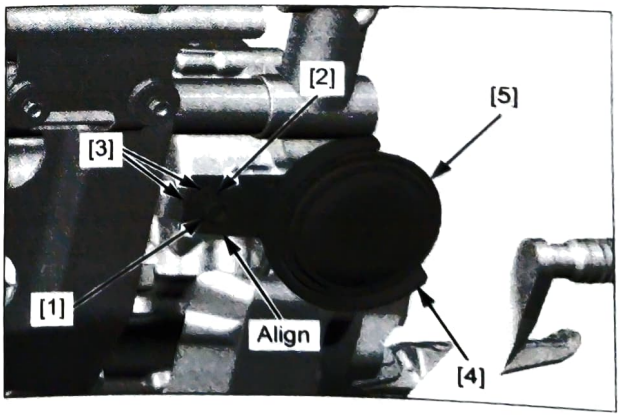

TURN SIGNAL/HAZARD RELAY

NOTE:

- When the ignition switch is turned OFF with the hazard flasher system operating, the system continue operating.

TURN SIGNAL/HAZARD RELAY REMOVAL/INSTALLATION

Remove the main seat (page 2-4).

Remove the turn signal/hazard relay [1] from the stay.

Installation is in the reverse order of removal.

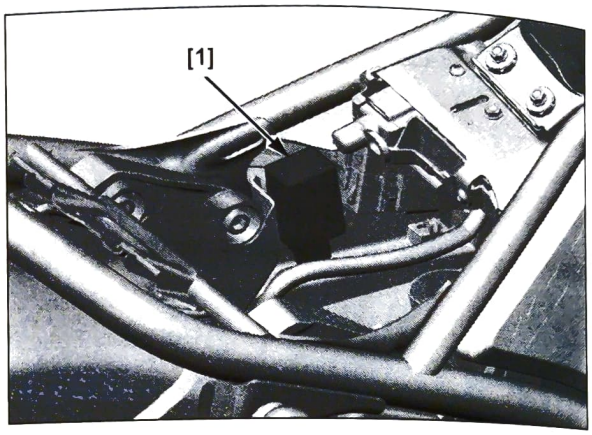

TURN SIGNAL LIGHT CIRCUIT INSPECTION

NOTE:

- If any LED in the turn signal light does not turn on, replace the turn signal light (page 22-5).
- The turn signal lights are controlled by the LED turn signal relay.
- If there is an open circuit in the one (front or rear) turn signal light, the other turn signal light blinks faster than usual in order to notify the rider of the problem.
- The hazard flasher system can be operated with the ignition switch turned ON.
- When the ignition switch is turned OFF while the hazard flasher system is operating, the system is continue operating until the hazard switch is turned off.
- Check the following before troubleshooting:
  - Battery condition
  - 7.5 A HORN/STOP fuse
  - Turn signal switch and hazard switches

SYSTEM INSPECTION

Check the following:

- Battery condition
- Ignition switch and turn signal light switch function
- Loose connectors
- Fuse

If above items are all normal, check the following:

Connect the peak voltage adaptor to the digital multimeter, or use the Imrie diagnostic tester.

Turn the ignition switch ON and turn signal light switch ON.

Check the voltage between the following terminals of the wire harness side connector.

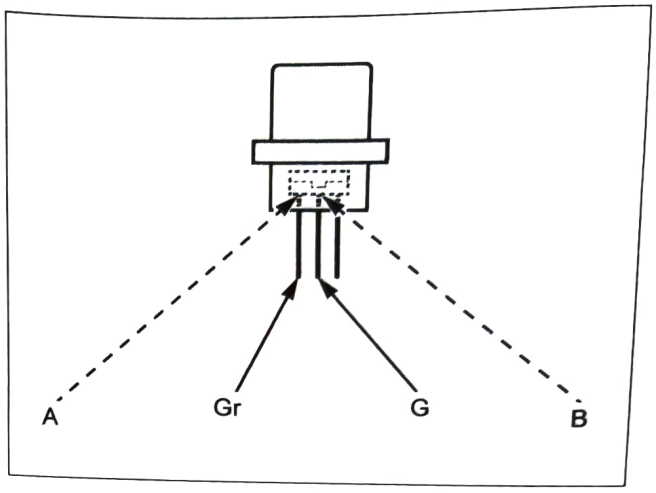

NOTE:

- Measure with the connector connected.

CONNECTION: A (Gray) (+) – B (Green) (–)
STANDARD:
Battery voltage – peak voltage = 1.5 V maximum

TOOL:

IgnitionMate peak voltage tester	**MTP07-0286 (U.S.A. only) or 07HGJ-0020100 (not available in U.S.A.)**
Peak voltage adaptor with commercially available digital multimeter (impedance 10 MΩ/DCV minimum)	

If there is no standard voltage, inspect the open or short circuit in Gray and Green wires.

If there is standard voltage, replace the turn signal / hazard relay with a known good one (page 22-26), and recheck.

TURN SIGNAL/HAZARD DIODE

REMOVAL/INSTALLATION

Remove the side cover (page 2-4).

Turn the ignition switch OFF.

Remove the diode [1] by pulling it up.

Installation is in the reverse order of removal.

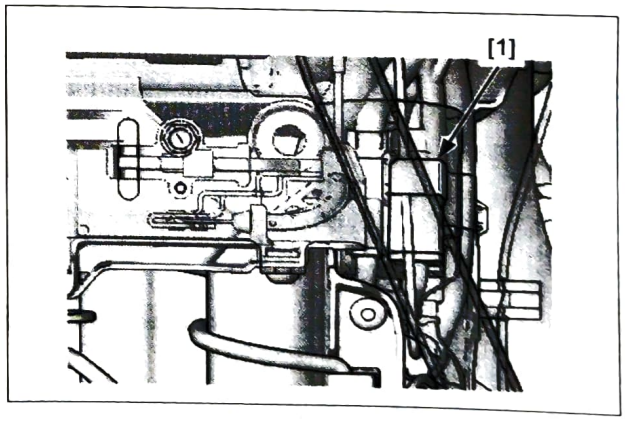

INSPECTION

Check for continuity between the turn signal light diode [1] terminals.
When there is continuity, a small resistance value will register.

If there is continuity in one direction, the turn signal light diode is normal.

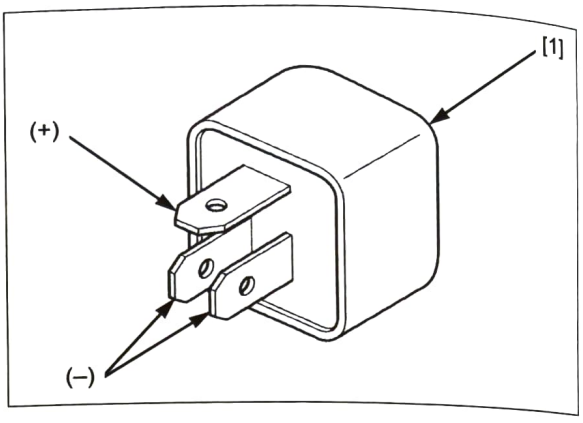

FAN RELAY

REMOVAL/INSTALLATION

Remove the side cover (page 2-4).

Remove the fuse box cover and fan relay [1].

Installation is in the reverse order of removal.

– For relay inspection (page 4-64)



CIRCUIT INSPECTION

For relay inspection (page 4-63).

Remove the fan relay (page 22-28).

RELAY SWITCH/COIL POWER INPUT LINE

Measure the voltage between the relay terminal (switch power input line) of the power box [1] and ground.

CONNECTION: B (+) – Ground (–)

There should be battery voltage at all times.

If there is no voltage, check the following:

– FAN (10 A) fuse
– Red wire between the terminal B and FAN fuse for open circuit

Measure the voltage between the relay terminal (coil power input line) of the power box [1] and ground.

CONNECTION: D (+) – Ground (–)

There should be battery voltage when the ignition switch is turned ON with the engine stop switch "○".

If there is no voltage, check the following:

– Brown or Brown/Black wire between the FAN relay and FI relay for open circuit
– FI relay and its circuit (page 4-63)

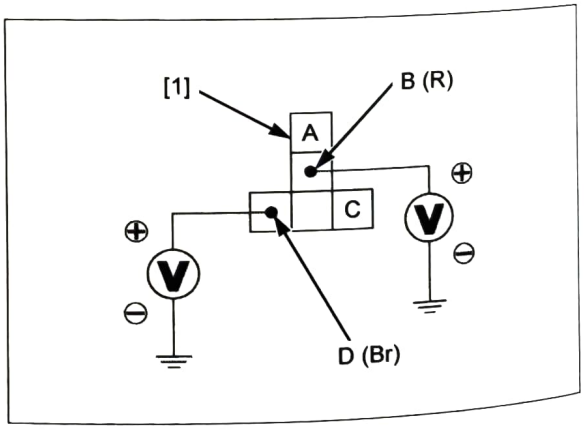

SIGNAL LINE

Disconnect the ECM 39P (Black) connector (page 4-58).

Check for continuity between power box [1] and wire harness side ECM 39P (Black) connector [2] terminals.

TOOL:
Test probe, 2 pack **07ZAJ-RDJA110**

CONNECTION: C – Gray

There should be continuity.
If there is continuity, check for open circuit in the Green/yellow wire between the power box and ECM.

Check for continuity between the fuel pump relay terminal of the relay box [1] and ground.

CONNECTION: C – Ground

There should be no continuity.
If there is continuity, check for short circuit in the Green/yellow wire between the relay box and ECM.

If all of above inspections are normal, check for open circuit in the Black/white (A) wire between the relay box and fan motor.

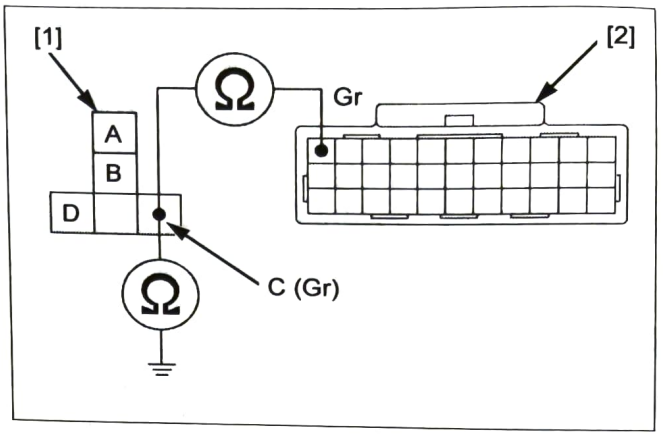

HIGH BEAM RELAY

REMOVAL/INSTALLATION

Release the FI relay box from battery case (page 4-63).

Remove the high beam relay cover [1].

Remove the high beam relay [2] from the relay connector.

Installation is in the reverse order of removal.

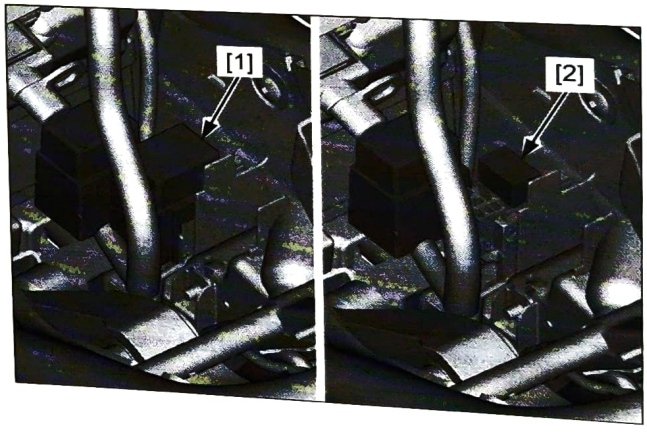

CIRCUIT INSPECTION

For relay inspection (page 4-63).

Remove the high beam relay (page 22-29).

RELAY POWER INPUT/GROUND LINE

Measure the voltage between each relay terminals of the relay connector [1] and ground.

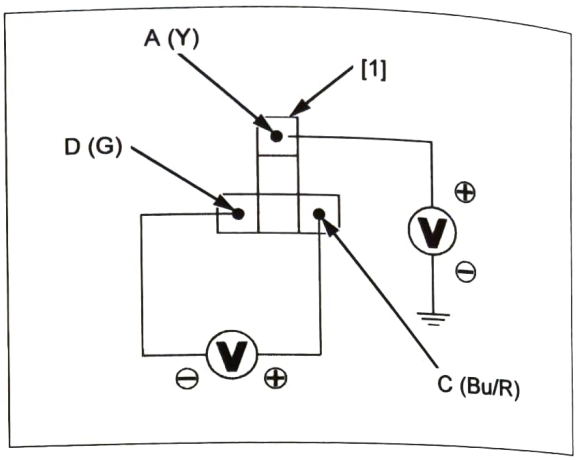

CONNECTION: A (+) – ground (–)

There should be battery voltage when the ignition switch is turned ON.

If there is no voltage, check the following:

- Yellow wire between the high beam relay and the power box HEAD fuse (7.5 A)
- HEAD fuse (7.5 A)

Measure the voltage between each relay terminals of the relay connector.

CONNECTION: C (+) – D (–)

There should be battery voltage when the ignition switch is turned ON and dimmer switch is "High beam".

If there is no voltage, check the following:

- Blue/red wire between the high beam relay connector and dimmer switch
- Yellow wire between the high beam relay connector and the power box HEAD fuse (7.5 A)
- HEAD fuse (7.5 A)
- Green wire between the high beam relay connector and ground
- Dimmer switch (page 22-19)

SIGNAL LINE

Disconnect the headlight 6P (Black) connector (page 22-4).

Check for continuity between the relay terminal of the relay connector [1] and terminal of the headlight 6P (Black) connector [2].

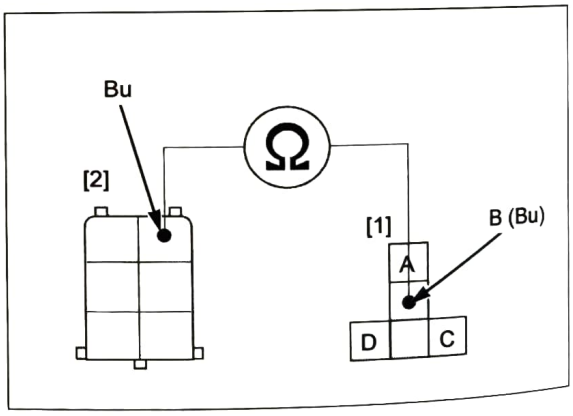

CONNECTION: B – Blue

There should be continuity.
If there is no continuity, check for open circuit in the Blue wire between the relay connector and the headlight.

USB CHARGER UNIT

INSPECTION

Disconnect the USB charger unit 2P (Black) connector (page 22-31).

Turn the ignition switch ON.

Measure the voltage between the connector terminals.

CONNECTION: Red/yellow (+) – Black (–)

There should be battery voltage when the ignition switch is turned ON.

- If there is no voltage, check for blown fuse (OP fuse 10 A) or an open circuit in the wire harness.
- If the fuse and the circuit are normal but the USB charger unit does not function, replace the a USB charger unit.

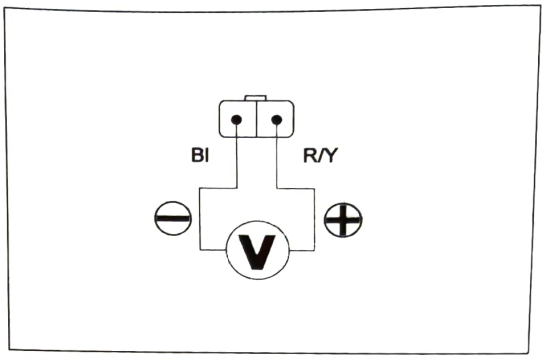

REMOVAL/INSTALLATION

Remove the main seat (page 2-4).

Turn the ignition switch OFF.

Remove the following:

– Socket bolts [1]
– Bolt [2]

Disconnect the USB charger unit 2P (Black) connector [3] and remove the USB charger unit [4].

Installation is in the reverse order of removal.

NOTE:

- When installing the USB charger unit, clean the USB charger unit and seat catch cover [5] attaching surface.
- Install the USB charger unit in position as shown.
- Replace the double sided tape [6] with a new one. Do not allow oil to adhere. After installation, do not let water splash for 2 days.
- Route the wire properly (page 1-27).

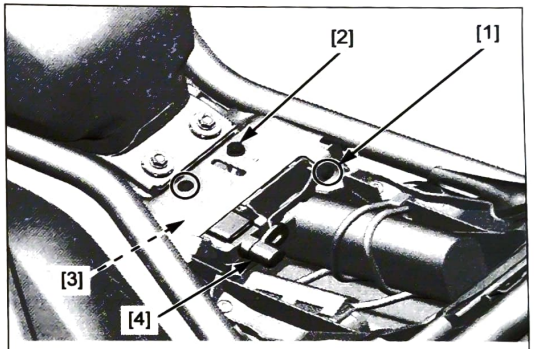

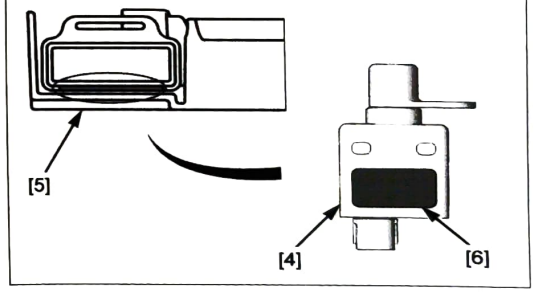

MEMO

23. WIRING DIAGRAM

WIRING DIAGRAM (MT type) 23-2

WIRING DIAGRAM (DCT type) 23-5

PGM-FI SYSTEM DIAGRAM 23-8

RING DIAGRAM (MT type)

WER SUPPLY:

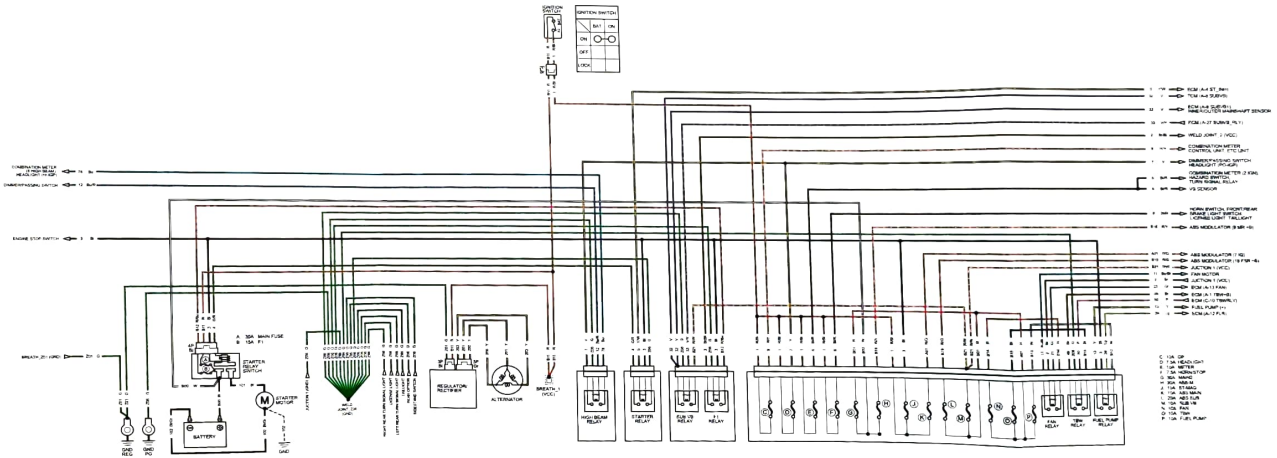

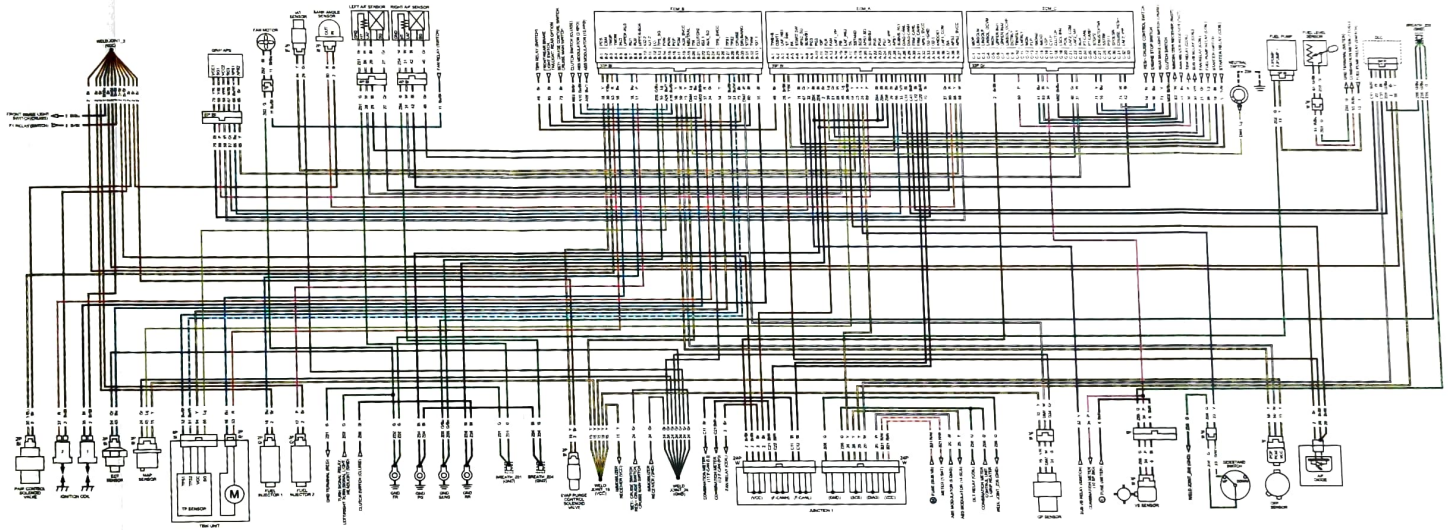

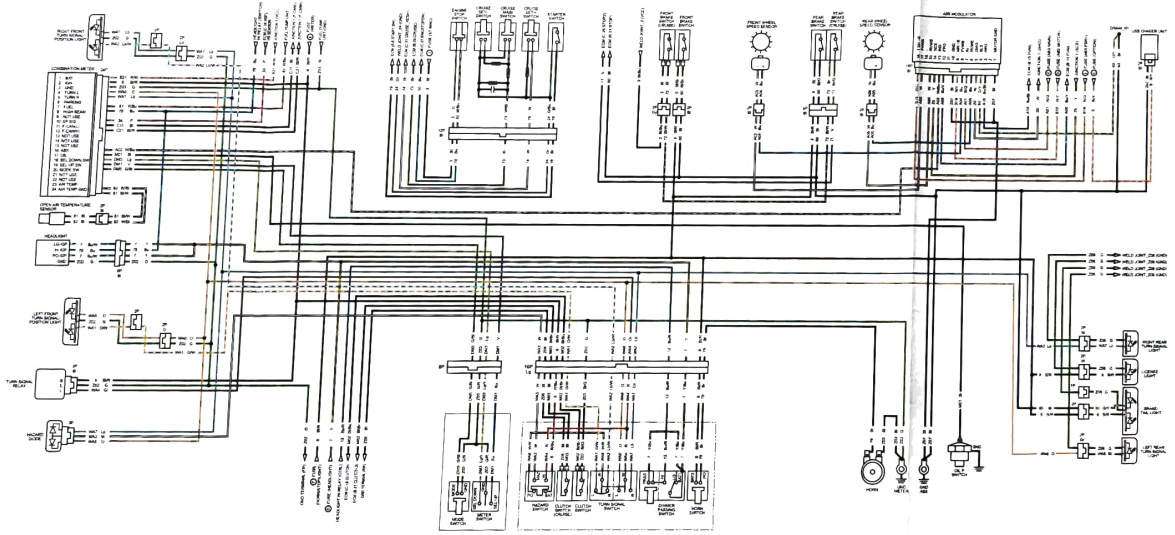

WIRING DIAGRAM (DCT type)

POWER SUPPLY:

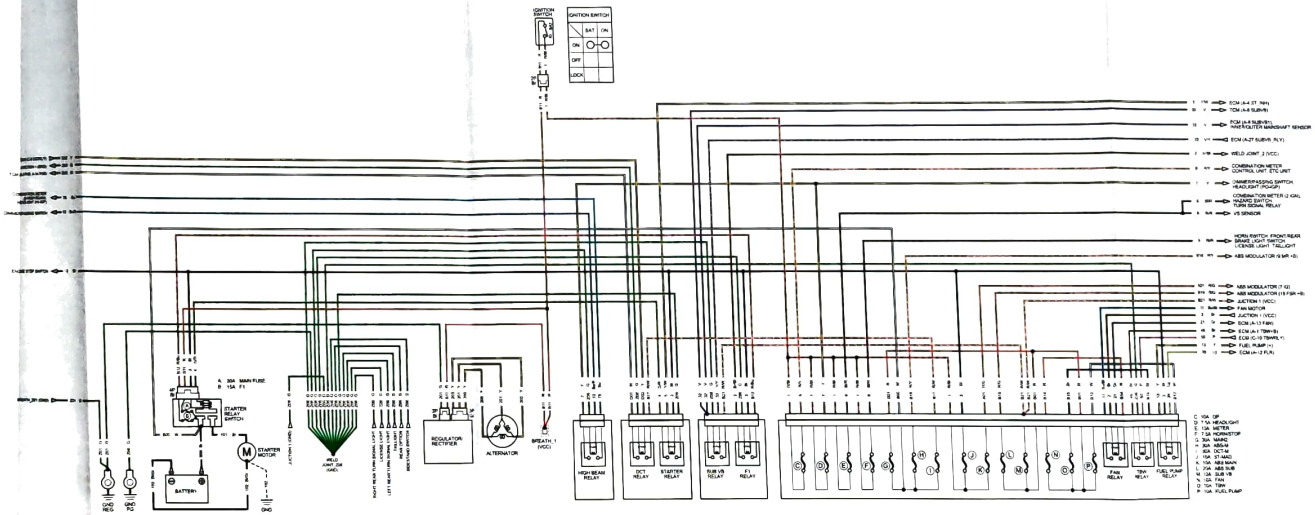

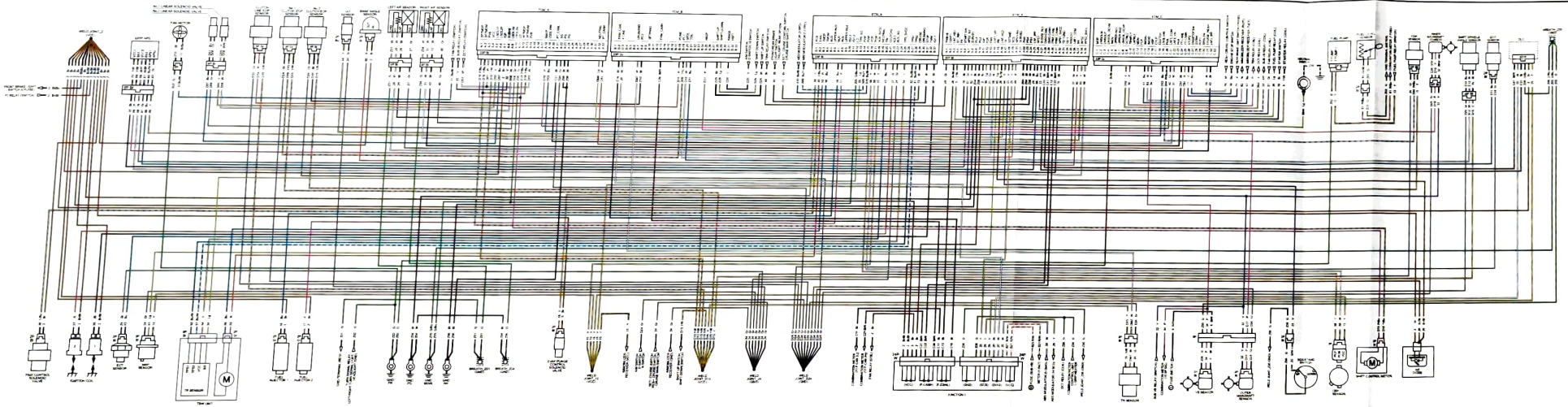

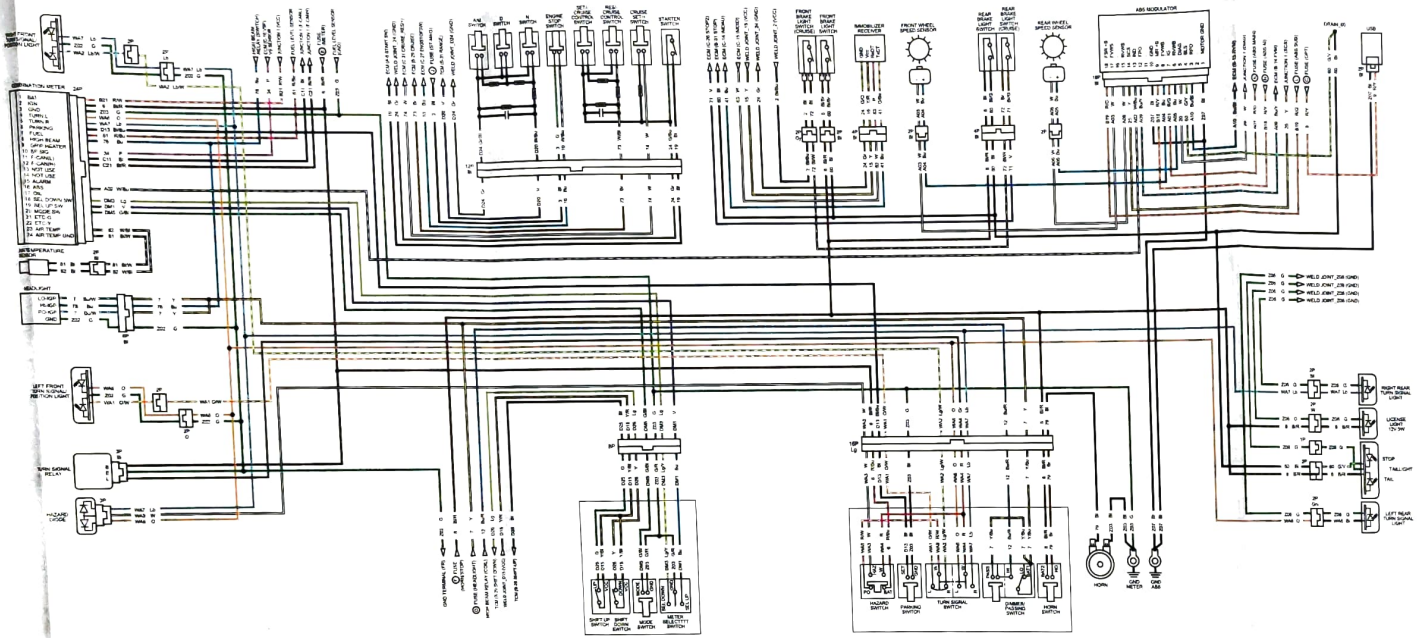

MT type:

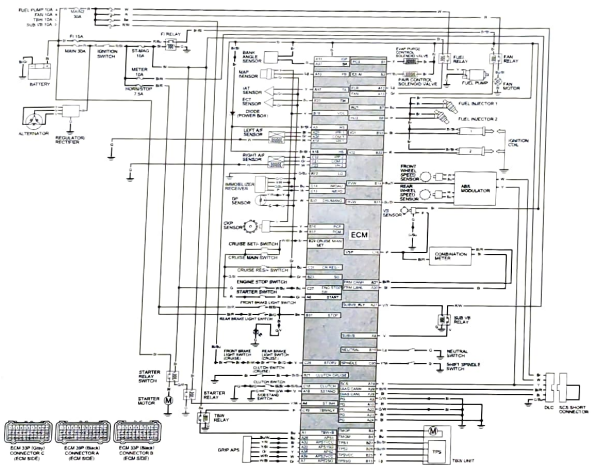
ECM
BATTERY
ALTERNATOR
IGNITION SWITCH
MAIN 30A
STARTER MOTOR
FUEL PUMP
FUEL INJECTOR 1
FUEL INJECTOR 2
IGNITION COIL
ABS MODULATOR
COMBINATION METER
STARTER RELAY SWITCH
STARTER MOTOR
TBW RELAY
TPS
TBW UNIT
DLC
SCS (SHORT) CONNECTION
NEUTRAL SWITCH
SHIFT SPINDLE SWITCH
SUB-VSS RELAY
FAN RELAY
FAN MOTOR

DCT type:

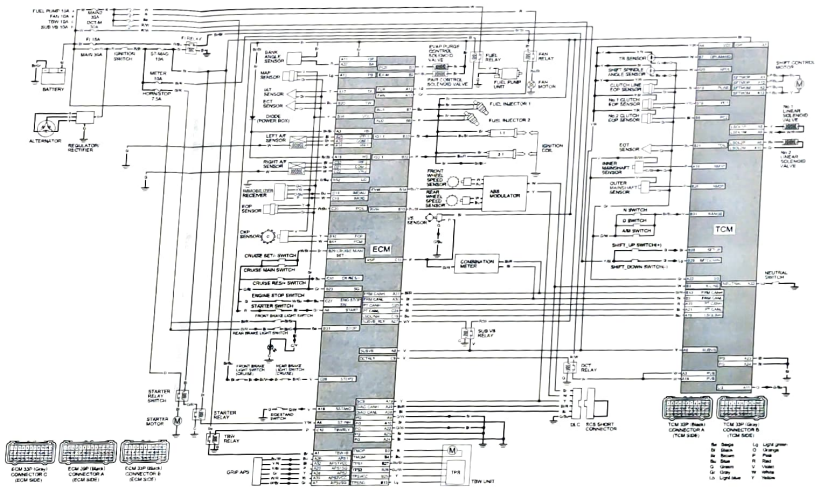
ECM
TCM
BATTERY
ALTERNATOR
REGULATOR/RECTIFIER
IGNITION SWITCH
ST MAG 15A
METER 10A
HORN/STOP 7.5A
MAIN 30A
FUEL 10A
FAN 10A
TRN 15A
SUB VB 10A
MAP SENSOR
IAT SENSOR
ECT SENSOR
DIODE (POWER BODY)
LEFT A/F SENSOR
RIGHT A/F SENSOR
KNOCKING SENSOR
EGR SENSOR
CKP SENSOR
CMP SENSOR
CRUISE SET SWITCH
CRUISE MAIN SWITCH
CRUISE RES/+ SWITCH
ENGINE STOP SWITCH
STARTER SWITCH
FRONT BRAKE LIGHT SWITCH
REAR BRAKE LIGHT SWITCH
HIGH BRAKE LIGHT SWITCH
STARTER RELAY SWITCH
STARTER MOTOR
STARTER RELAY
TRN RELAY
TRN UNIT
EVAP PURGE CONTROL SOLENOID VALVE
FUEL SHUTOFF SOLENOID VALVE
FUEL RELAY
FUEL PUMP UNIT
FAN RELAY
FAN MOTOR
FUEL INJECTOR 1
FUEL INJECTOR 2
IGNITION COIL
FRONT WHEEL SPEED SENSOR
REAR WHEEL SPEED SENSOR
ABS MODULATOR
COMBINATION METER
SUB VB RELAY
DCT RELAY
TR SENSOR
SHIFT SPINDLE ANGLE SENSOR
CLUTCH LINE FOR SENSOR
TM-1 CLUTCH EOP SENSOR
TM-2 CLUTCH EOP SENSOR
ESTT SENSOR
INNER MAINSHAFT SPEED SENSOR
OUTER MAINSHAFT SPEED SENSOR
N SWITCH
D SWITCH
AM SWITCH
SHIFT UP SWITCH(+)
SHIFT DOWN SWITCH(-)
SHIFT CONTROL MOTOR
TM-1 LINEAR SOLENOID VALVE
TM-2 LINEAR SOLENOID VALVE
NEUTRAL SWITCH
DLC
ROS SHORT CONNECTOR
ECM 33P Gray CONNECTOR C (ECM SIDE)
ECM 33P Black CONNECTOR A (ECM SIDE)
ECM 33P Black CONNECTOR B (ECM SIDE)
TCM 33P Black CONNECTOR A (TCM SIDE)
TCM 33P Gray CONNECTOR B (TCM SIDE)
GRP A/S

A/F SENSOR 4-55
ABS INDICATOR CIRCUIT TROUBLESHOOTING 20-11
ABS MODULATOR 20-25
ABS TROUBLESHOOTING 20-13
ABS TROUBLESHOOTING INFORMATION 20-5
AIR CLEANER 3-5
AIR CLEANER HOUSING 7-10
ALTERNATOR CHARGING COIL 21-7
ALTERNATOR COVER 11-4
BALANCER 14-7
BANK ANGLE SENSOR 4-60
BATTERY 21-5
BATTERY CASE 2-12
BODY PANEL LOCATIONS 2-3
BRAKE FLUID 3-21
BRAKE FLUID REPLACEMENT/AIR BLEEDING 19-5
BRAKE LIGHT SWITCH
LIGHTS/METERS/SWITCHES 22-22
MAINTENANCE 3-24
BRAKE LOCK OPERATION (DCT type) 3-23
BRAKE PAD/DISC 19-7
BRAKE PADS WEAR 3-21
BRAKE PEDAL 19-19
BRAKE SYSTEM 3-22
BRAKE/TAIL LIGHT
LIGHTS/METERS/SWITCHES 22-7
CABLE & HARNESS ROUTING 1-27
CAM CHAIN TENSIONER LIFTER 10-10
CAMSHAFT 10-11
CHARGING SYSTEM INSPECTION 21-6
CKP SENSOR 4-65
CLUTCH 12-9
CLUTCH EOP SENSOR 13-62
CLUTCH EOP SENSOR COVER (DCT type) 2-10
CLUTCH INITIALIZE LEARNING (TCM) 13-65
CLUTCH LEVER 12-25
CLUTCH OIL FEED PIPE 13-36
CLUTCH OIL FILTER (DCT type) 3-14
CLUTCH SWITCH (MT type) 22-23
CLUTCH SYSTEM (MT type) 3-24
COMBINATION METER 22-8
COMBINATION METER/VS SENSOR 22-13
COMPONENT LOCATION
ALTERNATOR/STARTER CLUTCH 11-3
CLUTCH/GEARSHIFT LINKAGE (MT type) 12-4
CRANKCASE/TRANSMISSION/BALANCER 14-5
CRANKSHAFT/PISTON/CYLINDER 15-3
CYLINDER HEAD/VALVE/CAMSHAFT 10-4
DUAL CLUTCH TRANSMISSION (DCT type) 13-5
ENGINE REMOVAL/INSTALLATION 16-3
FRONT WHEEL/SUSPENSION/STEERING 17-5
FUEL SYSTEM 7-3
HYDRAULIC BRAKE 19-3
REAR WHEEL/SUSPENSION 18-4
CONNECTOR BOX 2-15
COOLANT REPLACEMENT 8-5
COOLING SYSTEM 3-16
SYSTEM FLOW PATTERN 8-3
SYSTEM TESTING 8-4
CRANKCASE ASSEMBLY 14-27
CRANKCASE BREATHER 3-5
CRANKCASE SEPARATION 14-12
CRANKPIN BEARING 15-9
CRANKSHAFT 15-4
CYLINDER COMPRESSION 10-5
CYLINDER HEAD COVER 10-5
CYLINDER HEAD/CAM CHAIN TENSIONER 10-17
DCT DTC INDEX 13-10
DCT DTC TROUBLESHOOTING 13-12
DCT RELAY 13-65
DCT SYMPTOM TROUBLESHOOTING 13-4
DCT TROUBLESHOOTING INFORMATION 13-8
DRIVE CHAIN 3-17
DRIVE CHAIN COVER 2-9
DRIVE CHAIN SLIDER 3-20
DRIVE SPROCKET COVER 2-9
DTC INDEX
ABS BRAKE SYSTEM 20-9
DUAL CLUTCH/PRIMARY DRIVEN GEAR 13-48
ECM 4-58
ECT SENSOR 4-57
EMISSION CONTROL SYSTEMS 1-60
ENGINE IDLE SPEED 3-15
ENGINE INSTALLATION 16-9
ENGINE OIL 3-12
ENGINE OIL FILTER 3-13
ENGINE OIL PRESSURE INDICATOR/
EOP SWITCH (MT type) 22-14
ENGINE REMOVAL 16-4
EOP SENSOR 13-63
EOT SENSOR 13-62
EVAP CANISTER 7-19
EVAP PURGE CONTROL SOLENOID VALVE 7-18
EVAPORATIVE EMISSION CONTROL SYSTEM 3-16
EXHAUST PIPE 2-17
FAN RELAY 22-28
FI RELAY 4-63
FLYWHEEL 11-6
FORK 17-18
FRONT AIR CLEANER COVER 2-5
FRONT BRAKE CALIPER 19-15
FRONT FENDER 2-7
FRONT MASTER CYLINDER 19-11
FRONT SIDE COVER 2-5
FRONT WHEEL 17-14
FUEL FILLER CAP 7-7
FUEL GAUGE/FUEL LEVEL SENSOR 22-16
FUEL INJECTOR 7-13
FUEL LINE 3-4
FUEL LINE INSPECTION 7-4
FUEL PUMP RELAY 7-19
FUEL PUMP UNIT 7-7
FUEL TANK 7-6
GEARSHIFT ARM/GEARSHIFT PEDAL 12-23
GEARSHIFT LINKAGE
CLUTCH/GEARSHIFT LINKAGE (MT type) 12-20
DUAL CLUTCH TRANSMISSION (DCT type) 13-55
GP SENSOR (MT type) 4-61
GRIP APS 4-62
HANDLEBAR 17-6
HEADLIGHT 22-4
HEADLIGHT AIM 3-24
HEEL GUARD 2-10
HIGH BEAM RELAY 22-29
HIGH COOLANT TEMPERATURE INDICATOR/
ECT SENSOR 22-13
HORN 22-25
IAT SENSOR 4-57
IGNITION COIL 5-10
IGNITION SWITCH 22-18
IGNITION SYSTEM INSPECTION 5-7
IGNITION TIMING 5-9
INSULATOR 10-25
LEFT ENGINE COVER 2-11
LEFT HANDLEBAR SWITCH 22-19
LICENSE LIGHT 22-8
LINEAR SOLENOID VALVE 13-44
LUBRICATION & SEAL POINTS 1-21

INDEX

LUBRICATION SYSTEM DIAGRAM 9-4
MAIN JOURNAL BEARING 15-6
MAIN SEAT 2-4
MAINSHAFT SENSOR 13-59
MAINTENANCE SCHEDULE 3-3
MAP SENSOR 4-56
MIL CIRCUIT TROUBLESHOOTING 4-54
MODEL IDENTIFICATION 1-3
MUFFLER 2-16
NEUTRAL SWITCH (DCT type) 13-63
NEUTRAL SWITCH (MT type) 22-24
NUTS/BOLTS/FASTENERS 3-27
OIL PRESSURE INSPECTION 9-6
OIL PUMP 9-6
OIL PUMP DRIVEN GEAR 9-9
OIL STRAINER 9-10
OPEN AIR TEMPERATURE SENSOR 22-15
PARKING BRAKE CALIPER (DCT type) 19-23
PARKING BRAKE LEVER (DCT type) 19-20
PARKING BRAKE SWITCH (DCT type) 22-23
PASSENGER SEAT (CM model) 2-4
PGM-FI SYMPTOM TROUBLESHOOTING 4-10
PGM-FI SYSTEM DIAGRAM 23-8
PGM-FI SYSTEM DTC INDEX 4-11
PGM-FI SYSTEM DTC TROUBLESHOOTING 4-16
PGM-FI TROUBLESHOOTING INFORMATION 4-6
PISTON/CYLINDER 15-12
PRIMARY DRIVE GEAR
  CLUTCH/GEARSHIFT LINKAGE (MT type) 12-18
  DUAL CLUTCH TRANSMISSION (DCT type) 13-51
RADIATOR COOLANT 3-15
RADIATOR RESERVE TANK 8-10
RADIATOR/COOLING FAN 8-7
REAR AIR CLEANER COVER 2-6
REAR BRAKE CALIPER 19-17
REAR FENDER 2-8
REAR MASTER CYLINDER 19-13
REAR WHEEL 18-5
REARVIEW MIRROR 2-6
REGULATOR/RECTIFIER 21-7
RIGHT CRANKCASE COVER
  CLUTCH/GEARSHIFT LINKAGE (MT type) 12-5
  DUAL CLUTCH TRANSMISSION (DCT type) 13-38
RIGHT HANDLEBAR SWITCH 22-20
RIGHT REAR ENGINE COVER (MT type) 2-10
ROCKER ARM 10-7
SEAT CATCH HOOK 2-11
SECONDARY AIR SUPPLY SYSTEM
  FUEL SYSTEM 7-14
  MAINTENANCE 3-16
SERVICE INFORMATION
  ABS BRAKE SYSTEM 20-2
  ALTERNATOR/STARTER CLUTCH 11-2
  BATTERY/CHARGING SYSTEM 21-2
  CLUTCH/GEARSHIFT LINKAGE (MT type) 12-2
  COOLING SYSTEM 8-2
  CRANKCASE/TRANSMISSION/BALANCER 14-2
  CRANKSHAFT/PISTON/CYLINDER 15-2
  CYLINDER HEAD/VALVE/CAMSHAFT 10-2
  DUAL CLUTCH TRANSMISSION (DCT type) 13-2
  ELECTRIC STARTER 6-2
  ENGINE REMOVAL/INSTALLATION 16-2
  FRAME/BODY PANELS/EXHAUST SYSTEM 2-2
  FRONT WHEEL/SUSPENSION/STEERING 17-2
  FUEL SYSTEM 7-2
  HYDRAULIC BRAKE 19-2
  IGNITION SYSTEM 5-2
  LIGHTS/METERS/SWITCHES 22-2
  LUBRICATION SYSTEM 9-2
  MAINTENANCE 3-2
  PGM-FI SYSTEM 4-2
  REAR WHEEL/SUSPENSION 18-2
SERVICE RULES 1-2
SHIFT CONTROL MOTOR/REDUCTION GEARS 13-52
SHIFT SPINDLE ANGLE SENSOR 13-61
SHOCK ABSORBER 18-8
SIDE COVER 2-4
SIDESTAND
  FRAME/BODY PANELS/EXHAUST SYSTEM 2-15
  MAINTENANCE 3-26
SIDESTAND SWITCH 22-24
SPARK PLUG 3-6
SPECIAL TOOL LIST 1-24
SPECIFICATIONS 1-4
STARTER CLUTCH 11-9
STARTER MOTOR 6-7
STARTER RELAY 6-12
STARTER RELAY SWITCH 6-9
STATOR 11-6
STEERING HEAD BEARINGS 3-27
STEERING STEM 17-28
SUB VB RELAY 4-65
SUSPENSION 3-26
SWINGARM 18-8
SYSTEM DIAGRAM
  ABS BRAKE SYSTEM 20-4
  BATTERY/CHARGING SYSTEM 21-4
  DUAL CLUTCH TRANSMISSION (DCT type) 13-7
  ELECTRIC STARTER 6-5
  IGNITION SYSTEM 5-5
SYSTEM LOCATION
  ABS BRAKE SYSTEM 20-3
  BATTERY/CHARGING SYSTEM 21-4
  DUAL CLUTCH TRANSMISSION (DCT type) 13-6
  ELECTRIC STARTER 6-4
  IGNITION SYSTEM 5-4
  LIGHTS/METERS/SWITCHES 22-3
  PGM-FI SYSTEM 4-4
TBW RELAY 4-64
TCM 13-63
TECHNICAL FEATURES 1-64
THERMOSTAT 8-6
THROTTLE BODY 7-11
THROTTLE OPERATION 3-4
TOOL BOX 2-12
TORQUE VALUES 1-11
TR SENSOR 13-60
TRANSMISSION 14-14
TROUBLESHOOTING
  ALTERNATOR/STARTER CLUTCH 11-2
  BATTERY/CHARGING SYSTEM 21-3
  CLUTCH/GEARSHIFT LINKAGE (MT type) 12-3
  COOLING SYSTEM 8-2
  CRANKCASE/TRANSMISSION/BALANCER 14-4
  CRANKSHAFT/PISTON/CYLINDER 15-2
  CYLINDER HEAD/VALVE/CAMSHAFT 10-3
  ELECTRIC STARTER 6-3
  FRAME/BODY PANELS/EXHAUST SYSTEM 2-2
  FRONT WHEEL/SUSPENSION/STEERING 17-4
  HYDRAULIC BRAKE 19-2
  IGNITION SYSTEM 5-3
  LUBRICATION SYSTEM 9-3
  REAR WHEEL/SUSPENSION 18-3
TURN SIGNAL LIGHT 22-5
TURN SIGNAL/HAZARD RELAY 22-26
USB CHARGER UNIT 22-31
VALVE CLEARANCE 3-7
VS SENSOR 4-60

WATER PUMP 8-10
WHEEL SPEED SENSOR 20-22
WHEELS/TIRES 3-27
WIRING DIAGRAM (DCT type) 23-5
WIRING DIAGRAM (MT type) 23-2





61MLA00

© Honda Motor Co., Ltd. Tokyo, Japan - All Rights Reserved
PRINTED IN U.S.A.

MSV 17629